I-5 / 116TH STREET NE INTERCHANGE IMPROVEMENTS PHASE 4 RAMPS

SNOHOMISH COUNTY

VOLUME 3 OF 3

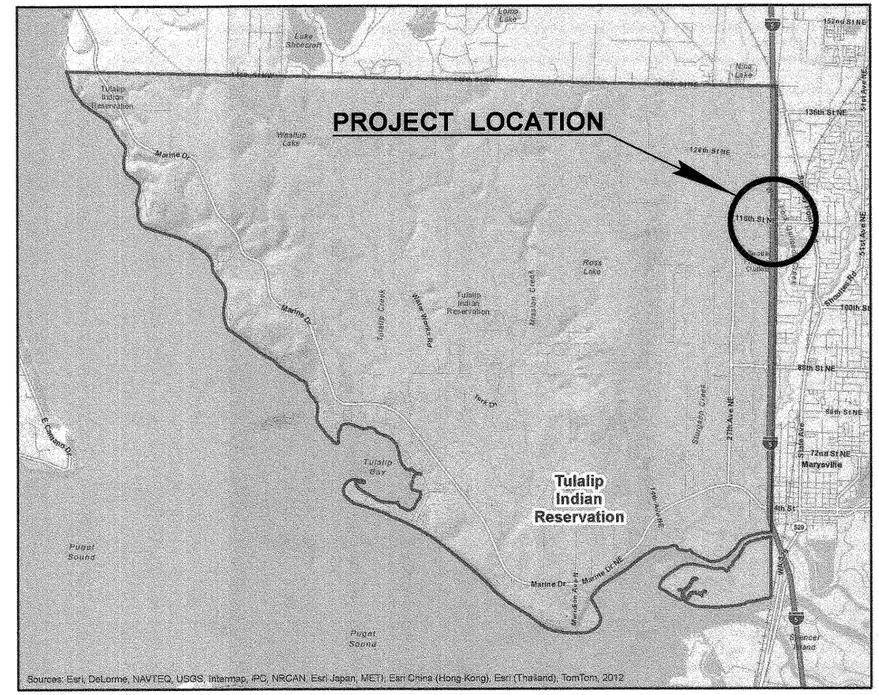

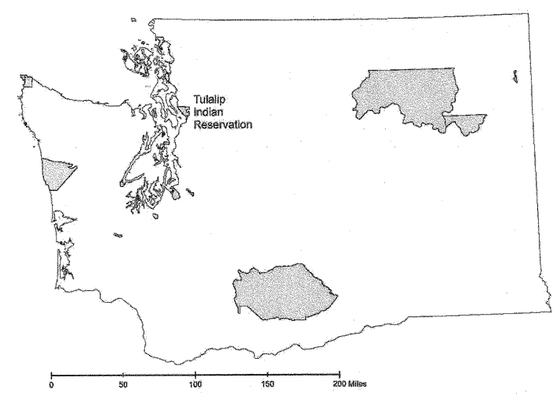

CONTRACTING AGENCY

THE TULALIP TRIBES
8802 27TH AVE NE
TULALIP, WA 98271
OFFICE (360) 654-2600

TULALIP TRIBE'S PROJECT ENGINEER

PARAMETRIX
719 2ND AVENUE, SUITE 200
SEATTLE, WA 98104
OFFICE (206) 394-3700
CONTACT: HAPPY LONGFELLOW

WSDOT PROJECT ENGINEER

WSDOT PROJECT OFFICE
9029 EL CAPITAN WAY
EVERETT, WA 98208-3637
OFFICE (425) 225-8799
CONTACT: MARK SAWYER

AGENCY CONTACTS

THE TULALIP TRIBES
CONSOLIDATED BOROUGH OF QUIL CEDA VILLAGE
8802 27TH AVE NE
TULALIP, WA 98271
OFFICE (360) 716-5024
CONTACT: DEBRA BRAY

TULALIP TRIBES
COMMUNITY DEVELOPMENT
6406 MARINE DR.
TULALIP, WA 98271
OFFICE (360) 716-4214
CONTACT: GUS TAYLOR

THE TULALIP TRIBES
TRIBAL EMPLOYMENT RIGHTS OFFICE
6406 MARINE DR.
TULALIP, WA 98271
OFFICE (360) 716-4441
CONTACT: SUMMER WHITE (MANAGER)
OFFICE (360) 716-4751
CONTACT: ROBERT HENDERSON

UTILITES

SNOHOMISH COUNTY PUBLIC UTILITIES DISTRICT (PUD)
210 E DIVISION ST
ARLINGTON, WA 98223
OFFICE (425) 783-8279
CELL (425) 737-0215
CONTACT: CRAIG SIMPSON

TULALIP TECHNOLOGY DATA SERVICES
8825 QUIL CEDA BOULEVARD, SUITE O
TULALIP, WA 98271
OFFICE (360) 716-5128
CONTACT: TRAVIS HILL

SNOHOMISH COUNTY
ENGINEERING SERVICES DIVISION
5TH FLOOR, COUNTY ADMIN-EAST BUILDING
3000 ROCKEFELLER
OFFICE (425) 388-3109
CONTACT: MAX PHAN

FRONTIER COMMUNICATIONS
1800 41ST STREET
EVERETT, WA 98201
OFFICE (425) 261-8888
CONTACT: CHUCK ROBERTS

TULALIP BROADBAND (CABLE)
8825 QUIL CEDA BOULEVARD, SUITE O
TULALIP, WA 98271
OFFICE (360) 716-3277
CELL (425) 754-0033
CONTACT: RICHARD BROWN

CITY OF MARYSVILLE
80 COLUMBIA AVE
MARYSVILLE, WA 98270
OFFICE (360) 636-8121
CELL (425) 754-4703
CONTACT: KEAN NELSON

VERIZON
OSP ENGINEERING
PO BOX 1003
EVERETT, WA 98200
OFFICE (425) 327-8118
CONTACT: JIM STRAGO

TULALIP WATER
8802 27TH AVE NE
TULALIP, WA 98271
OFFICE (360) 716-5022
CELL (425) 791-0062
CONTACT: LUCAS REYES

PUGET SOUND ENERGY (GAS)
MUNICIPAL CONSTRUCTION PLANNER
3630 RAILWAY AVE
EVERETT, WA 98201
OFFICE (425) 495-3290
CELL (425) 424-6685
CONTACT: ERIC LAIN

TULALIP TRIBES
Parametrix

REVISION			
NO.	DESCRIPTION	DATE	BY

FILE NAME U:\PSO\Projects\Clients\1598-TulalipTribes\554-1598-095 116th-Ph4-PSE\99Svcs\CADD\GNIPS&ESheets\BL1598033_PS_COVER.dgn
TIME 4:25:58 PM
DATE 8/24/2017
PLOTTED BY purgabut

INDEX

SHEET NO.	PLAN REFERENCE NO.	TITLE
1-2	IN1 - IN2	INDEX SHEET
3	VM1	VICINITY MAP
4-9	RS1 - RS6	ROADWAY SECTIONS
10-15	QTSU1 - QTSU6	QUANTITY TABULATION - STAGING
16-31	SU1 - SU16	STAGE CONSTRUCTION PLAN
32-36	AL1 - AL5	ALIGNMENT / RIGHT OF WAY PLAN
37-39	QTSP1 - QTSP3	QUANTITY TABULATION - SITE PREPARATION
40-44	SP1 - SP5	SITE PREPARATION / EXISTING UTILITIES PLAN
45-50	RP1 - RP6	ROADWAY PROFILES
51-52	QEC1A-1 - QEC1A-2	QUANTITY TABULATION - TEMPORARY EROSION AND SEDIMENTATION CONTROL - STAGE 1A
53-55	QEC1B-1 - QEC1B-3	QUANTITY TABULATION - TEMPORARY EROSION AND SEDIMENTATION CONTROL - STAGE 1B
56	QEC2-1	QUANTITY TABULATION - TEMPORARY EROSION AND SEDIMENTATION CONTROL - STAGE 2
57	QEC3-1	QUANTITY TABULATION - TEMPORARY EROSION AND SEDIMENTATION CONTROL - STAGE 3
58-62	EC1A-1 - EC1A-5	TESC PLAN - STAGE 1A
63-65	EC1B-1 - EC1B-3	TESC PLAN - STAGE 1B
66-67	EC2-1 - EC2-2	TESC PLAN - STAGE 2
68	EC3-1	TESC PLAN - STAGE 3
69	TD1	TESC DETAIL
70-78	DSN1 - DSN9	STRUCTURE NOTES - DRAINAGE
79-83	DR1 - DR5	DRAINAGE PLAN
84-88	DP1 - DP5	DRAINAGE PROFILES
89-94	DD1 - DD6	DRAINAGE DETAILS

SHEET NO.	PLAN REFERENCE NO.	TITLE
95	USN1	STRUCTURE NOTES - UTILITY
96	UT1	SANITARY SEWER FORCE MAIN LAYOUT
97	UT2	WATER LINE ON BRIDGE LAYOUT
98-100	UD1 - UD3	UTILITY DETAILS
101-105	CN1 - CN5	GRADING SOIL AND PREPARATION PLAN
106-110	LA1 - LA5	LANDSCAPE PLAN
111-112	LD1 - LD2	LANDSCAPE DETAILS
113-118	QTPV1 - QTPV6	QUANTITY TABULATION - PAVING
119-123	PV1 - PV5	PAVING PLAN
124-129	PD1 - PD6	PAVING DETAILS
130-135	PC1 - PC6	PAVING CONTROL
136-141	QTPM1 - QTPM6	QUANTITY TABULATION - PAVEMENT MARKING
142-146	PM1 - PM5	PAVEMENT MARKING PLAN
147-149	WA1 - WA3	RETAINING WALL PLAN AND PROFILE
150-152	WA4 - WA6	TEMPORARY RETAINING WALL PLAN AND PROFILE
153-154	WD1-WD2	WALL DETAILS
155	WD3	SEW TRAFFIC BARRIER LUMINAIRE ANCHORAGE DETAILS
156-158	WD4 - WD6	CABLE FENCE DETAILS
159-162	WD7 - WD10	WALL DETAILS

PLAN REFERENCE NO.

SHEET OF SHEETS

NOTE: ALL SHEET REFERENCES, FIRST NOS. OF STRUCTURE CODE DESIGNATIONS AND MATCH LINE SHEET REFERENCES, ETC., THROUGHOUT THE PLANS, REFER TO THE ENTRY IN THE PLAN REFERENCE NUMBER BOX.

FILE NAME	U:\PSO\Projects\Clients\1598-TulalipTribes\554-1598-095 116th-Ph4-PSE\99Svcs\CADD\DGN\PS&ESheets\BL1598033_PS_IN.dgn
TIME	4:26:42 PM
DATE	8/24/2017
PLOTTED BY	purgabut
DESIGNED BY	M. TSUN
ENTERED BY	B. PURGANAN
CHECKED BY	S. OLLING
APPROVED BY	H. LONGFELLOW

REVISION | DATE | BY

REGION NO. 10 | STATE WASH | FED.AID PROJ.NO.

JOB NUMBER

CONTRACT NO. | LOCATION NO.

P.E. STAMP BOX DATE

P.E. STAMP BOX DATE

TULALIP TRIBES Parametrix

I-5 / 116TH STREET NE
INTERCHANGE IMPROVEMENTS
PHASE 4 RAMPS

INDEX SHEET

Plot 1

PLAN REF. NO. IN1

SHEET 1 OF 238 SHEETS

INDEX (CONT)

SHEET NO.	PLAN REFERENCE NO.	TITLE
163-165	IL1 - IL3	ILLUMINATION PLANS
166-167	IL4 - IL5	ILLUMINATION SCHEDULES, NOTES AND DETAILS
168-169	SG1 - SG2	SIGNALIZATION PLANS
170-174	SG3 - SG7	SIGNALIZATION SCHEDULES, DETAILS AND NOTES
175-177	IT1 - IT3	ITS PLANS
178-180	ITD1 - ITD3	ITS DETAILS
181	REL1	SIGN RELOCATION SPECIFICATIONS
182-183	INS1-INS2	SIGN INSTALLATION SPECIFICATIONS
184-185	REM1 - REM2	SIGN REMOVAL SPECIFICATIONS
186-190	SN1 - SN5	SIGNING PLAN
191-192	SN6 - SN7	SIGN DETAILS
193	SB1	SIGN BRIDGE NO. 1 LAYOUT
194	SB2	SIGN BRIDGE NO. 2 LAYOUT
195	SB3	SIGN BRIDGE NO. 3 LAYOUT
196	SB4	SIGN BRIDGE STRUCTURAL DETAILS 1 OF 2
197	SB5	SIGN BRIDGE STRUCTURAL DETAILS 2 OF 2
198	SB6	SIGN STRUCTURES FOUNDATIONS - SHEET 1 OF 3
199	SB7	SIGN STRUCTURES FOUNDATIONS - SHEET 2 OF 3
200	SB8	SIGN STRUCTURES FOUNDATIONS - SHEET 3 OF 3
201	TB1	MOMENT SLAB TRAFFIC BARRIER
202	TB2	PEDESTRIAN BARRIER
203	TB3	BARRIER - DETAILS
204-233	TC1 - TC30	TRAFFIC CONTROL PLAN
234-238	DU1 - DU5	DETOUR PLAN

SHEET NO.	PLAN REFERENCE NO.	TITLE

PLAN REFERENCE NO.

SHEET OF SHEETS

NOTE: ALL SHEET REFERENCES, FIRST NOS. OF STRUCTURE CODE DESIGNATIONS AND MATCH LINE SHEET REFERENCES, ETC., THROUGHOUT THE PLANS, REFER TO THE ENTRY IN THE PLAN REFERENCE NUMBER BOX.

FILE NAME	U:\PSO\Projects\Clients\1598-TulalipTribes\554-1598-095 116th-Ph4-PSE\99Svcs\CADD\DGN\PS&ESheets\BL1598033_PS_IN.dgn
TIME	4:26:57 PM
DATE	8/24/2017
PLOTTED BY	purgabut
DESIGNED BY	M. TSUN
ENTERED BY	B. PURGANAN
CHECKED BY	S. OLLING
APPROVED BY	H. LONGFELLOW

REVISION	DATE	BY

REGION NO.	STATE	FED.AID PROJ.NO.
10	WASH	
JOB NUMBER		
CONTRACT NO.		LOCATION NO.

P.E. STAMP BOX DATE

P.E. STAMP BOX DATE

TULALIP TRIBES Parametrix

I-5 / 116TH STREET NE
INTERCHANGE IMPROVEMENTS
PHASE 4 RAMPS

INDEX SHEET

Plot 2

PLAN REF. NO. IN2

SHEET 2 OF 238 SHEETS

SEC 8 AND SEC 9, T. 30N. R. 5E. W.M.

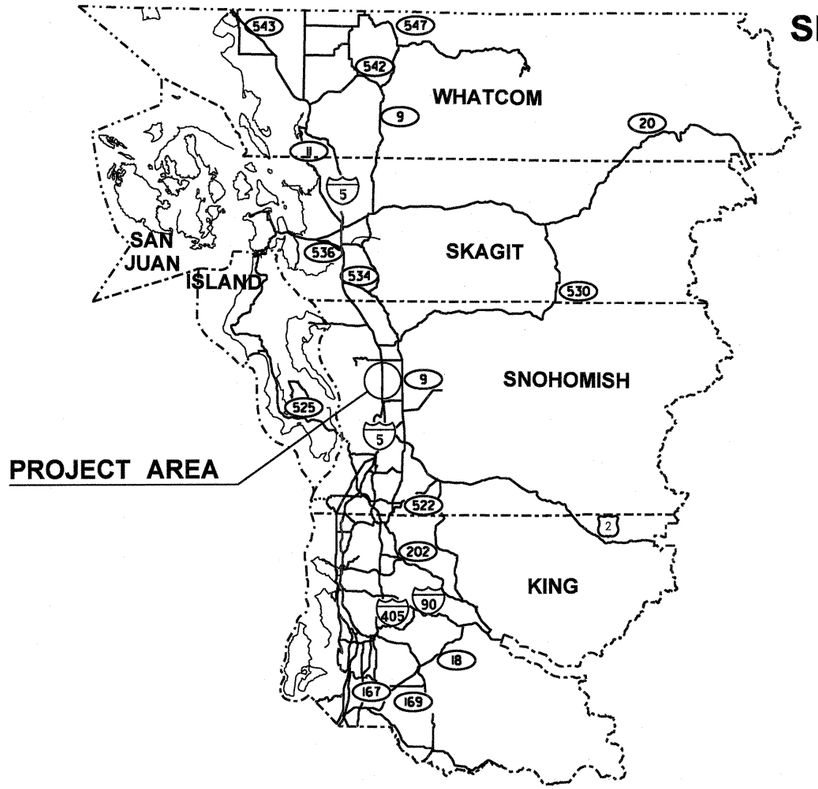

WSDOT
NORTHWEST REGION

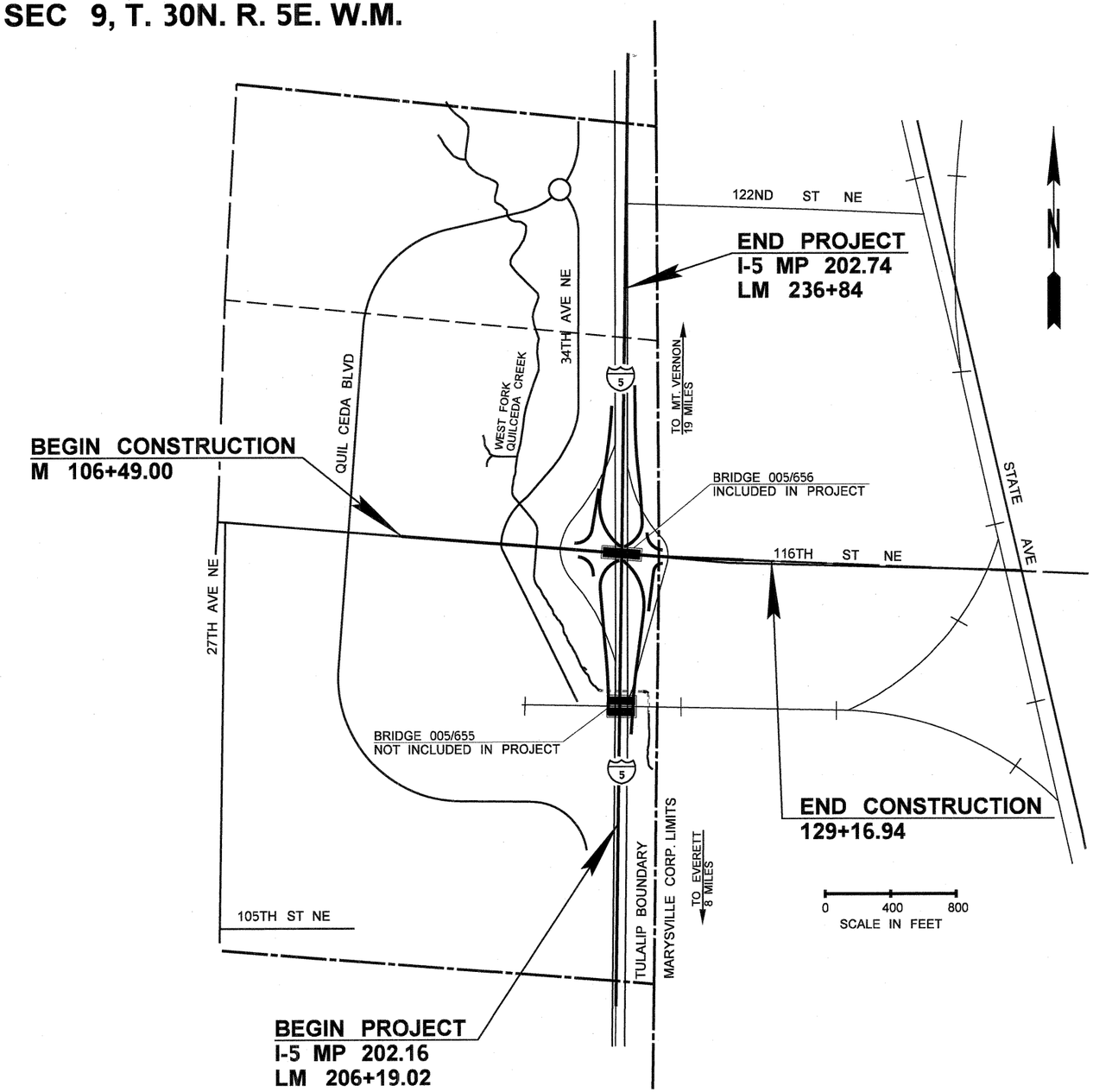

FILE NAME	U:\PSO\Projects\Clients\1598-TulalipTribes\554-1598-095 116th-Ph4-PSE\99Svcs\CADD\DGN\PS&ESheets\BL1598033_PS_VM.dgn
TIME	4:34:01 PM
DATE	8/24/2017
PLOTTED BY	purgabut
DESIGNED BY	M. TSUN
ENTERED BY	B. PURGANAN
CHECKED BY	S. OLLING
APPROVED BY	H. LONGFELLOW

REVISION	DATE	BY

REGION NO.	STATE	FED.AID PROJ.NO.
10	WASH	
JOB NUMBER		
CONTRACT NO.		LOCATION NO.

P.E. STAMP BOX DATE

P.E. STAMP BOX DATE

TULALIP TRIBES
Parametrix

I-5 / 116TH STREET NE
INTERCHANGE IMPROVEMENTS
PHASE 4 RAMPS

VICINITY MAP

Plot 1
PLAN REF NO
VM1
SHEET 3 OF 238 SHEETS

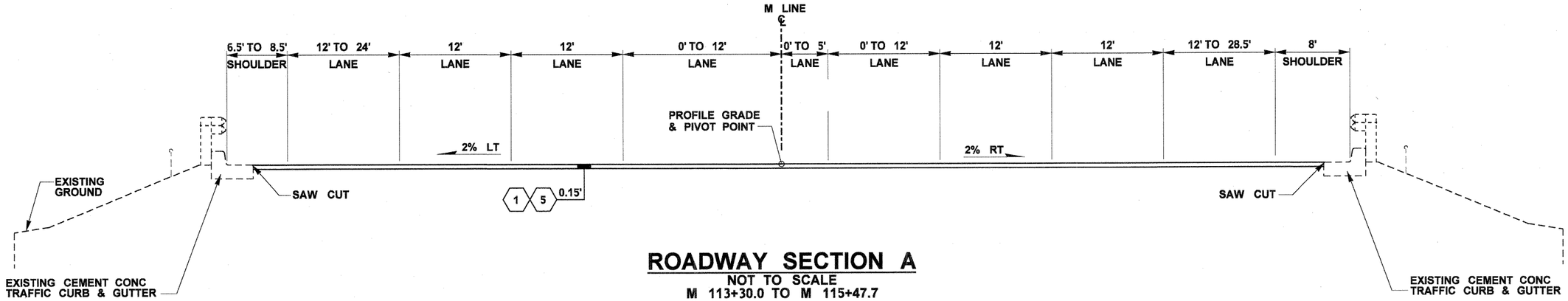

ROADWAY SECTION A

NOT TO SCALE

M 113+30.0 TO M 115+47.7

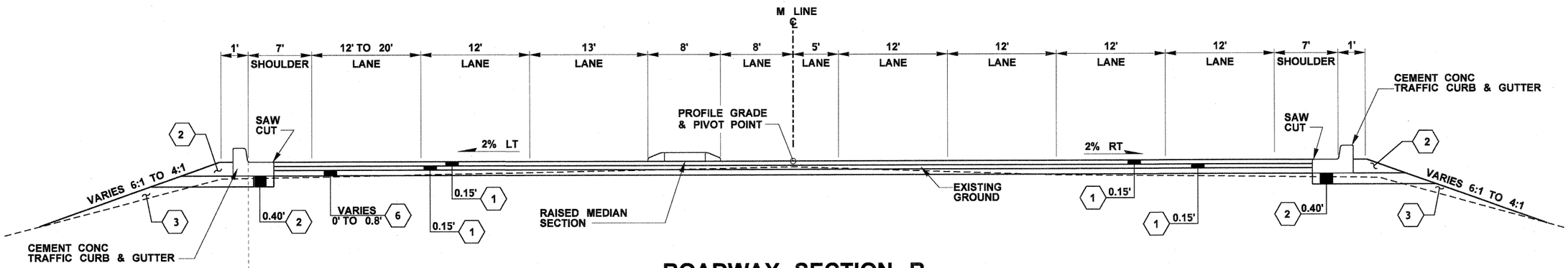

ROADWAY SECTION B

NOT TO SCALE

M 115+47.7 TO M 116+90.0

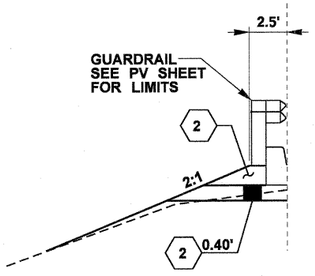

M 115+46.7 TO M 116+34.0

CONSTRUCTION NOTES:

1. ALL DEPTHS SHOWN ARE COMPACTED DEPTHS.
2. SEE PAVING AND PAVEMENT MARKING PLAN FOR VARIABLE WIDTHS.
3. ALL DIMENSIONS ARE IN FEET UNLESS OTHERWISE DESIGNATED.

LEGEND

1	HMA CL. 1/2 IN. PG 64-22
2	CRUSHED SURFACING BASE COURSE
3	GRAVEL BORROW INCL. HAUL
4	NOT USED
5	PLANING BITUMINOUS PAVEMENT
6	HMA PRELEVELING CL. 1/2 IN. PG 64-22

FILE NAME	U:\PSO\Projects\Clients\1598-TulalipTribes\554-1598-095 116th-Ph4-PSE\99Svcs\CADD\DGN\PS&ESheets\BL1598033_PS_RS.dgn
TIME	4:35:23 PM
DATE	8/24/2017
PLOTTED BY	purgabut
DESIGNED BY	M. TSUN
ENTERED BY	B. PURGANAN
CHECKED BY	D. PROCTOR
APPROVED BY	H. LONGFELLOW

REVISION | DATE | BY

REGION NO. 10 | STATE WASH | FED.AID PROJ.NO.

JOB NUMBER

CONTRACT NO. | LOCATION NO.

P.E. STAMP BOX DATE

STATE OF WASHINGTON HARRY DAVID LONGFELLOW 37902 REGISTERED PROFESSIONAL ENGINEER

P.E. STAMP BOX DATE

TULALIP TRIBES Parametrix ©

I-5 / 116TH STREET NE
INTERCHANGE IMPROVEMENTS
PHASE 4 RAMPS

ROADWAY SECTIONS

Plot 1

PLAN REF NO RS1

SHEET 4 OF 238 SHEETS

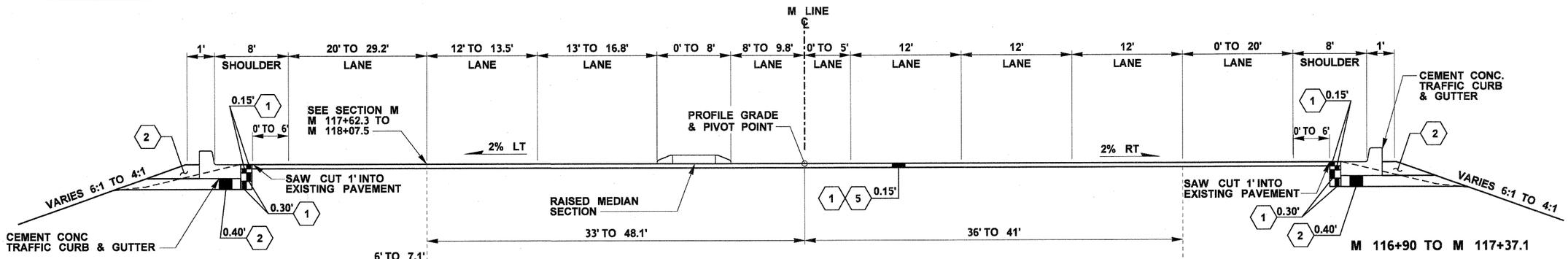

ROADWAY SECTION C

NOT TO SCALE

M 116+90.0 TO M 119+21.0

(M 118+85 TO M 119+21: BRIDGE APPROACH SLAB - NO PLANING OR HMA)

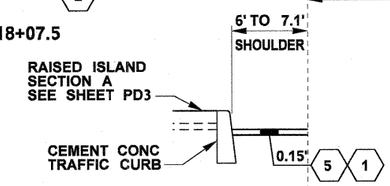

M 118+07.5 TO M 118+87.0

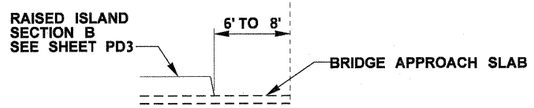

M 118+87.0 TO M 119+21.0

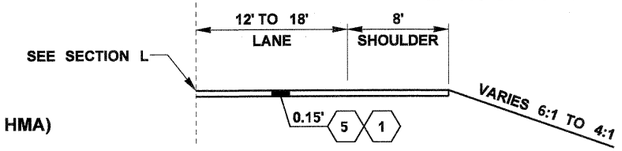

M 117+37.1 TO M 118+27.1

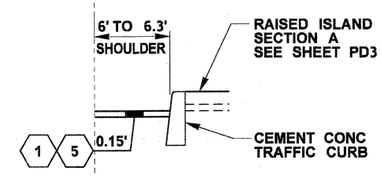

M 118+27.1 TO M 118+82.0

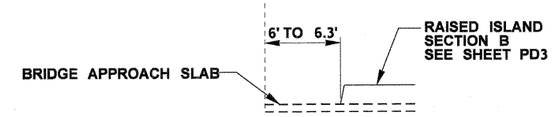

M 118+82.0 TO M 119+21.0

LEGEND

1	HMA CL. 1/2 IN. PG 64-22
2	CRUSHED SURFACING BASE COURSE
3	GRAVEL BORROW INCL. HAUL
4	NOT USED
5	PLANING BITUMINOUS PAVEMENT
6	HMA PRELEVELING CL. 1/2 IN. PG 64-22

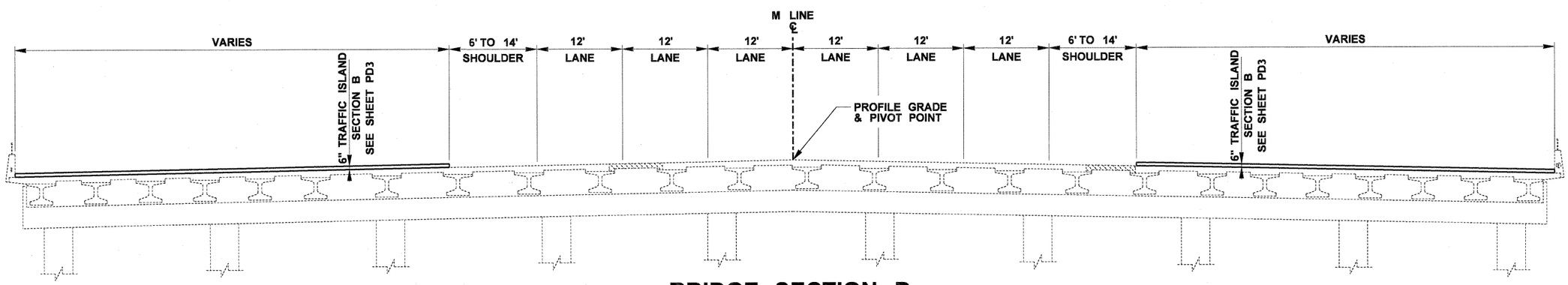

BRIDGE SECTION D

NOT TO SCALE

M 119+21.0 TO M 120+79.0

FILE NAME	U:\PSO\Projects\Clients\1598-TulalipTribes\554-1598-095 116th-Ph4-PSE\99Svcs\CADD\DGN\PS&ESheets\BL1598033_PS_RS.dgn
TIME	4:35:33 PM
DATE	8/24/2017
PLOTTED BY	purgabut
DESIGNED BY	M. TSUN
ENTERED BY	B. PURGANAN
CHECKED BY	D. PROCTOR
APPROVED BY	H. LONGFELLOW

REVISION | DATE | BY

REGION NO. 10 | STATE WASH | FED.AID PROJ.NO.

JOB NUMBER

CONTRACT NO. | LOCATION NO.

P.E. STAMP BOX — DATE

P.E. STAMP BOX — DATE

TULALIP TRIBES — Parametrix

I-5 / 116TH STREET NE
INTERCHANGE IMPROVEMENTS
PHASE 4 RAMPS

ROADWAY SECTIONS

Plot 2

PLAN REF NO RS2

SHEET 5 OF 238 SHEETS

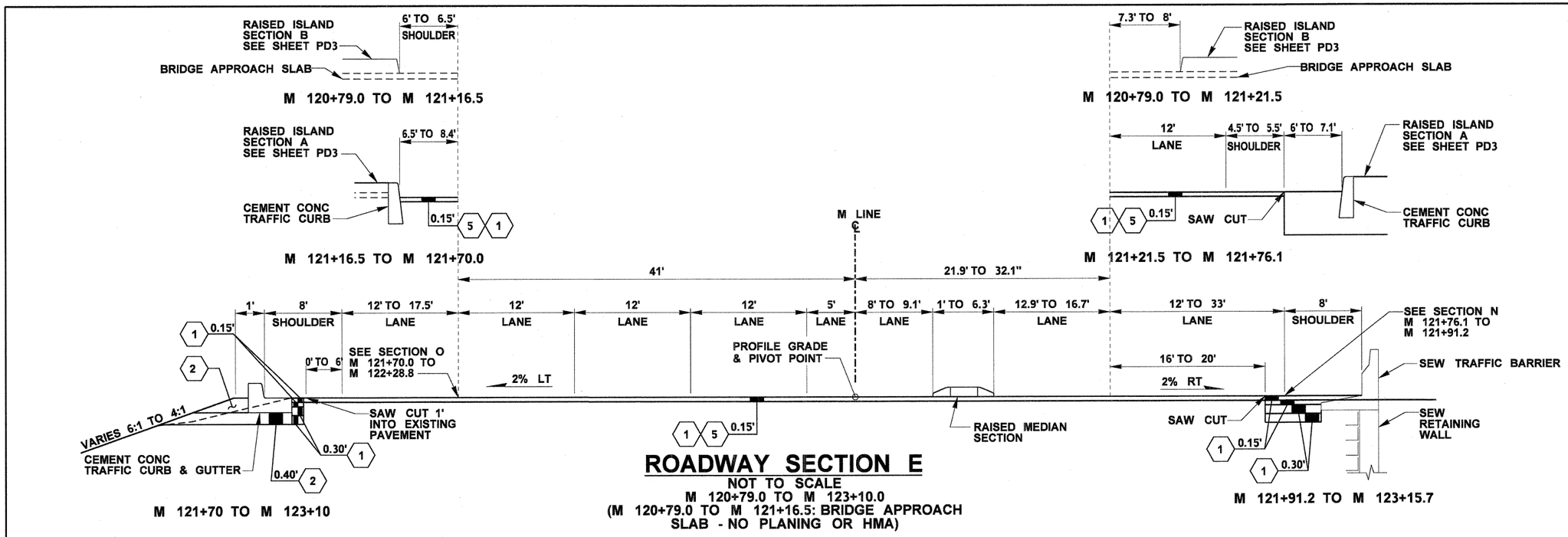

ROADWAY SECTION E

NOT TO SCALE
M 120+79.0 TO M 123+10.0
(M 120+79.0 TO M 121+16.5: BRIDGE APPROACH SLAB - NO PLANING OR HMA)

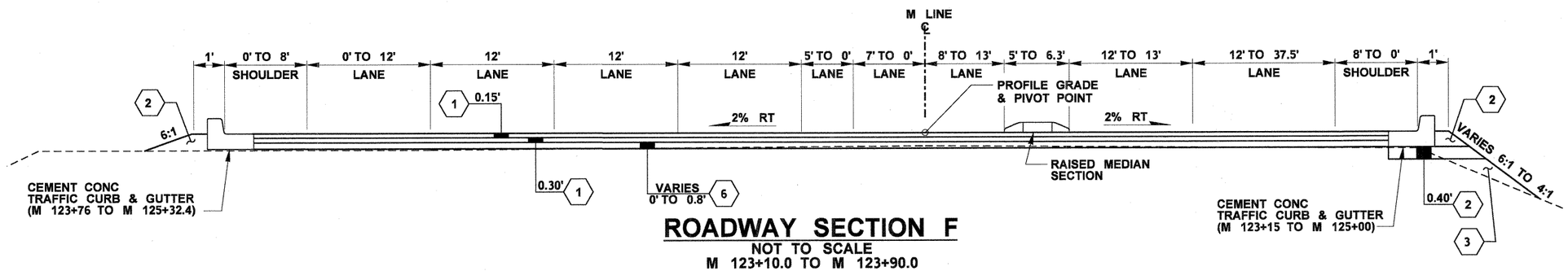

ROADWAY SECTION F

NOT TO SCALE
M 123+10.0 TO M 123+90.0

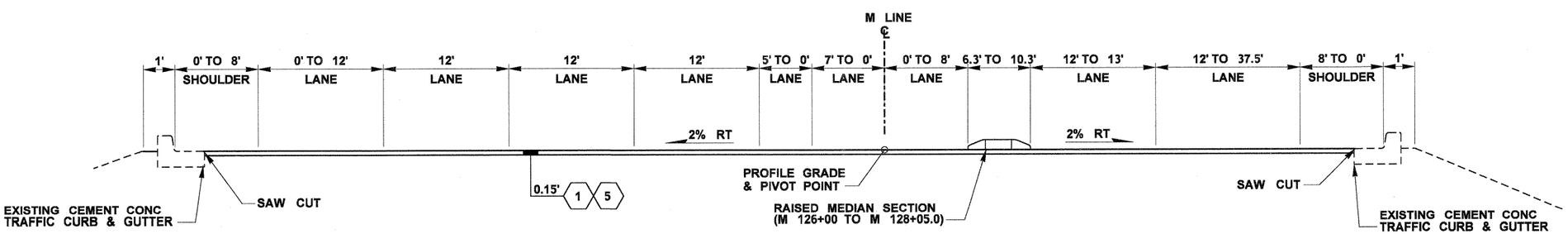

ROADWAY SECTION G

NOT TO SCALE
M 123+90.0 TO M 126+63.4

LEGEND

1	HMA CL. 1/2 IN. PG 64-22
2	CRUSHED SURFACING BASE COURSE
3	GRAVEL BORROW INCL. HAUL
4	NOT USED
5	PLANING BITUMINOUS PAVEMENT
6	HMA PRELEVELING CL. 1/2 IN. PG 64-22

FILE NAME	U:\PSO\Projects\Clients\1598-TulalipTribes\554-1598-095 116th-Ph4-PSE\99Svcs\CADD\DGN\PS&ESheets\BL1598033_PS_RS.dgn
TIME	4:35:43 PM
DATE	8/24/2017
PLOTTED BY	purgabut
DESIGNED BY	M. TSUN
ENTERED BY	B. PURGANAN
CHECKED BY	D. PROCTOR
APPROVED BY	H. LONGFELLOW

REVISION | DATE | BY

REGION NO. 10 | STATE WASH | FED.AID PROJ.NO.

JOB NUMBER

CONTRACT NO. | LOCATION NO.

P.E. STAMP BOX DATE

HARRY DAVID LONGFELLOW STATE OF WASHINGTON 37802 REGISTERED PROFESSIONAL ENGINEER 8/24/17

P.E. STAMP BOX DATE

TULALIP TRIBES Parametrix

I-5 / 116TH STREET NE
INTERCHANGE IMPROVEMENTS
PHASE 4 RAMPS

ROADWAY SECTIONS

Plot 3

PLAN REF NO RS3

SHEET 6 OF 238 SHEETS

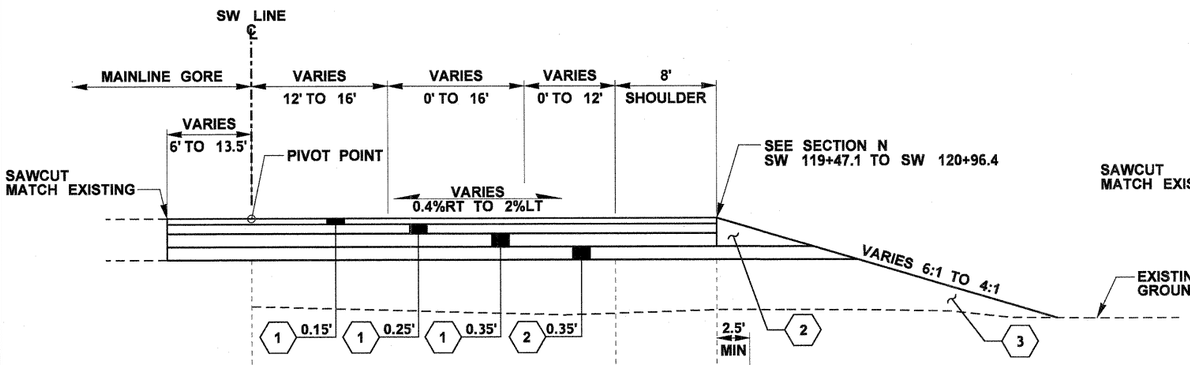

RAMP SECTION H

NOT TO SCALE

SW 111+58.9 TO SW 122+64.9

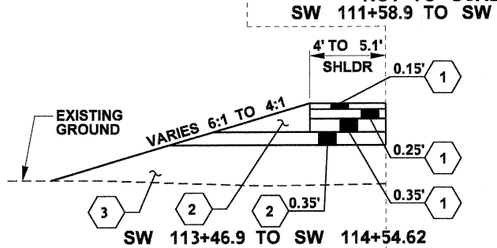

SW 113+46.9 TO SW 114+54.62

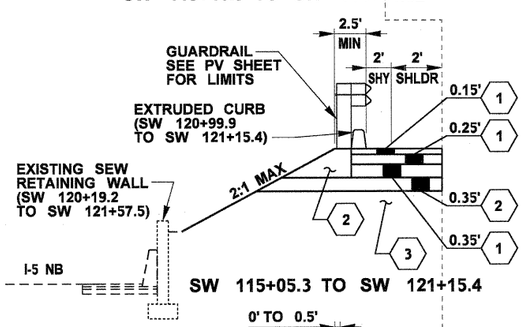

SW 115+05.3 TO SW 121+15.4

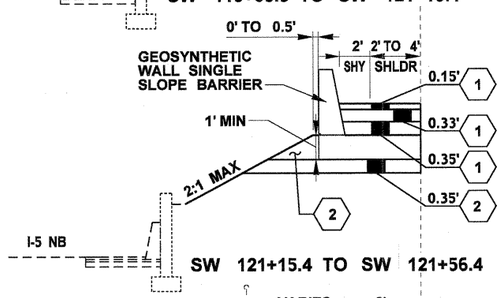

SW 121+15.4 TO SW 121+56.4

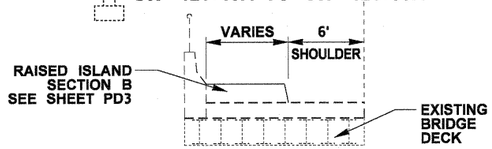

SW 121+56.6 TO SW 122+64.9

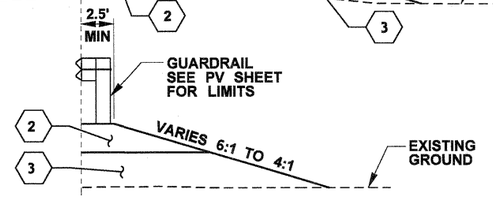

SW 111+89.7 TO SW 113+92.6
SW 115+19.4 TO SW 116+13.9

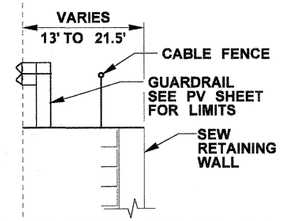

SW 113+92.5 TO SW 115+19.4

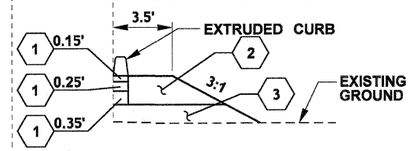

SW 119+17.0 TO SW 119+47.0

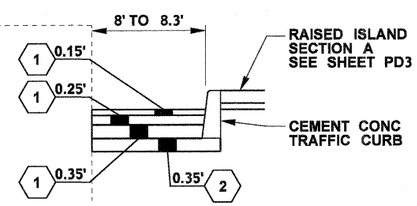

SW 120+96.4 TO SW 121+56.8

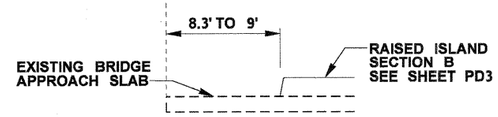

SW 121+56.8 TO SW 122+05.0

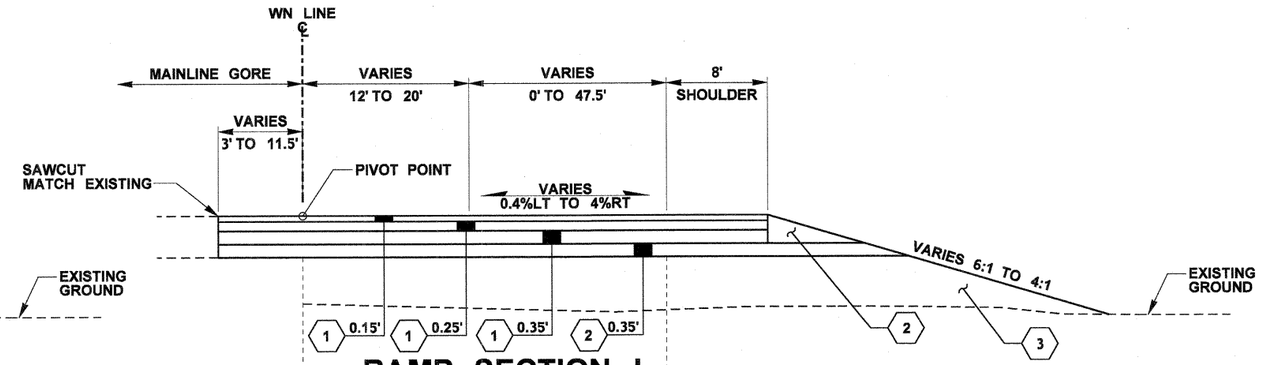

RAMP SECTION I

NOT TO SCALE

WN 122+57.4 TO WN 132+89.1

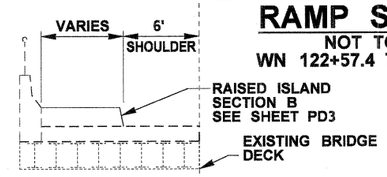

WN 122+57.4 TO WN 123+42.3

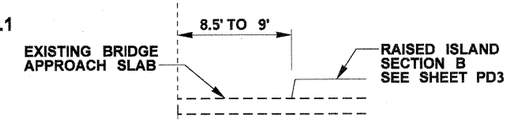

WN 123+24.4 TO WN 123+42.1

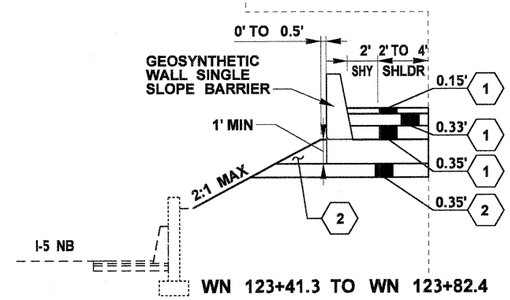

WN 123+41.3 TO WN 123+82.4

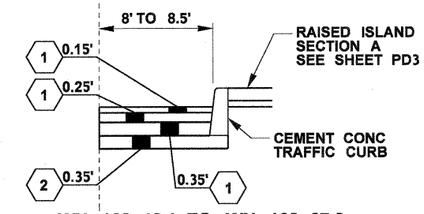

WN 123+42.1 TO WN 123+67.3

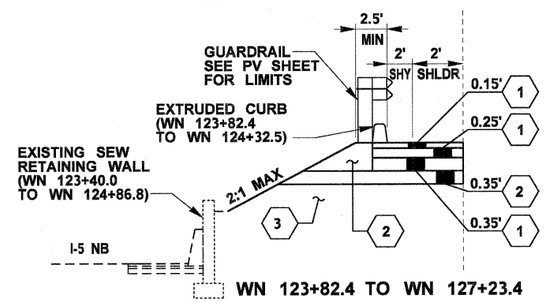

WN 123+82.4 TO WN 127+23.4

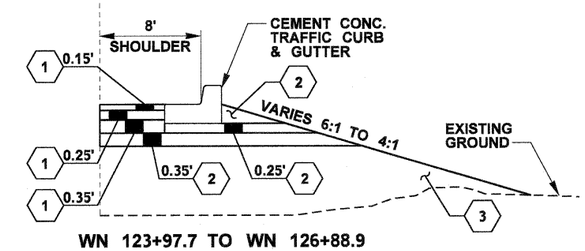

WN 123+97.7 TO WN 126+88.9

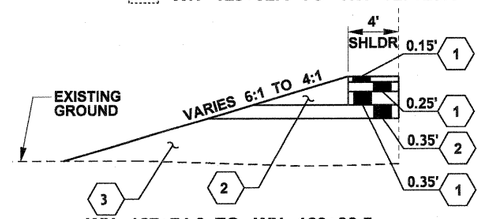

WN 127+74.2 TO WN 129+33.5

LEGEND

1	HMA CL. 1/2 IN. PG 64-22
2	CRUSHED SURFACING BASE COURSE
3	GRAVEL BORROW INCL. HAUL
4	NOT USED
5	PLANING BITUMINOUS PAVEMENT
6	HMA PRELEVELING CL. 1/2 IN. PG 64-22

FILE NAME	U:\PSO\Projects\Clients\1598-TulalipTribes\554-1598-095 116th-Ph4-PSE\99Svcs\CADD\DGN\PS&ESheets\BL1598033_PS_RS.dgn
TIME	4:35:52 PM
DATE	8/24/2017
PLOTTED BY	purgabut
DESIGNED BY	M. TSUN
ENTERED BY	B. PURGANAN
CHECKED BY	D. PROCTOR
APPROVED BY	H. LONGFELLOW

REVISION | DATE | BY

REGION NO. 10 | STATE WASH | FED.AID PROJ.NO.

JOB NUMBER

CONTRACT NO. | LOCATION NO.

P.E. STAMP BOX DATE

HAPPY DAVID LONGFELLOW STATE OF WASHINGTON 37902 REGISTERED PROFESSIONAL ENGINEER 8/24/2017

P.E. STAMP BOX DATE

TULALIP TRIBES Parametrix

I-5 / 116TH STREET NE
INTERCHANGE IMPROVEMENTS
PHASE 4 RAMPS

ROADWAY SECTIONS

Plot 4

PLAN REF NO RS4

SHEET 7 OF 238 SHEETS

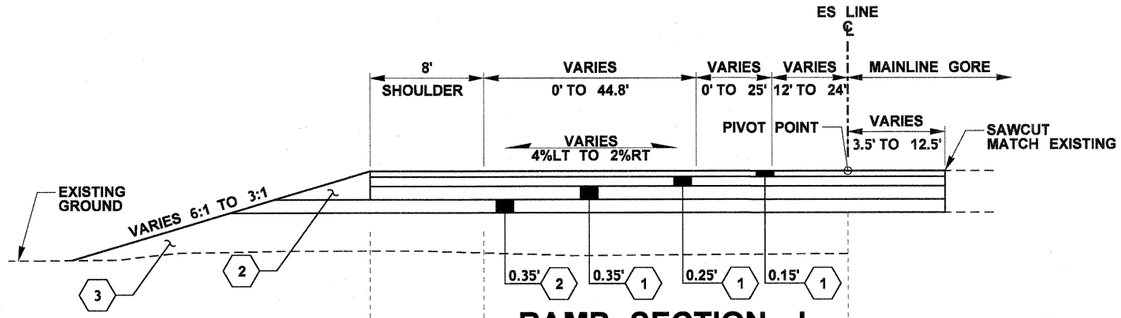

RAMP SECTION J

NOT TO SCALE

ES 112+62.3 TO ES 122+75.8

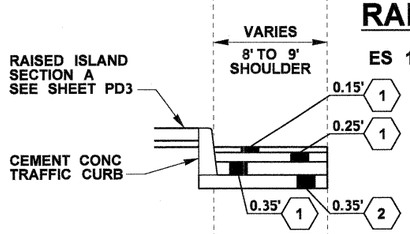

ES 121+60.2 TO ES 121+92.4

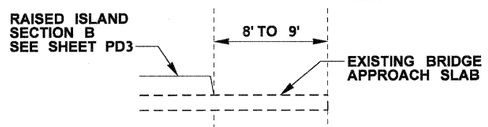

ES 121+92.4 TO ES 122+05.7

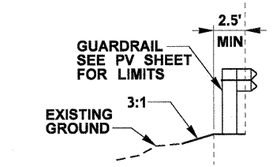

ES 113+15.6 TO ES 120+73.5

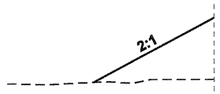

ES 116+50.3 TO ES 116+96.3
ES 117+73.5 TO ES 118+56.0

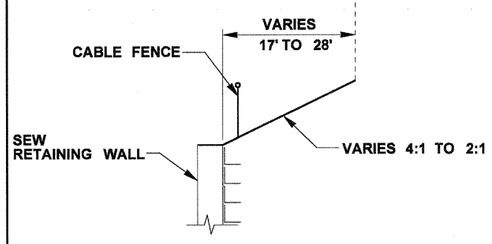

ES 115+73.6 TO ES 118+20

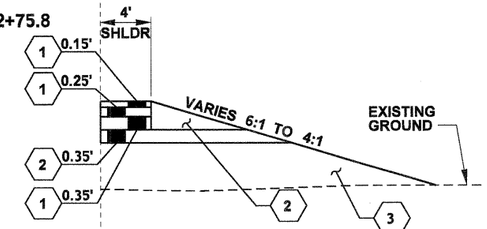

ES 115+81.9 TO ES 116+20.1

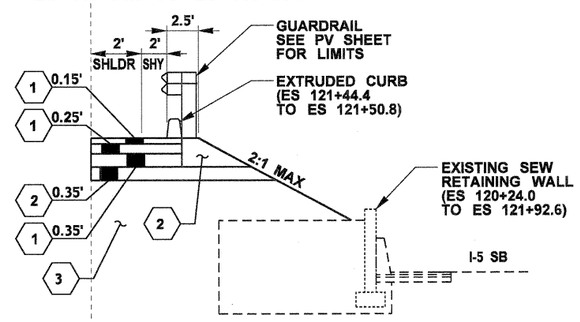

ES 117+73.4 TO ES 121+50.8

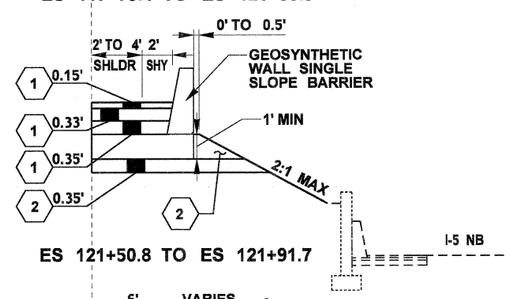

ES 121+50.8 TO ES 121+91.7

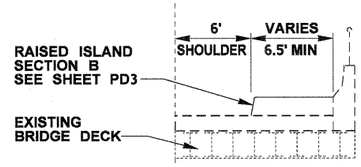

ES 121+92.6 TO ES 122+71.7

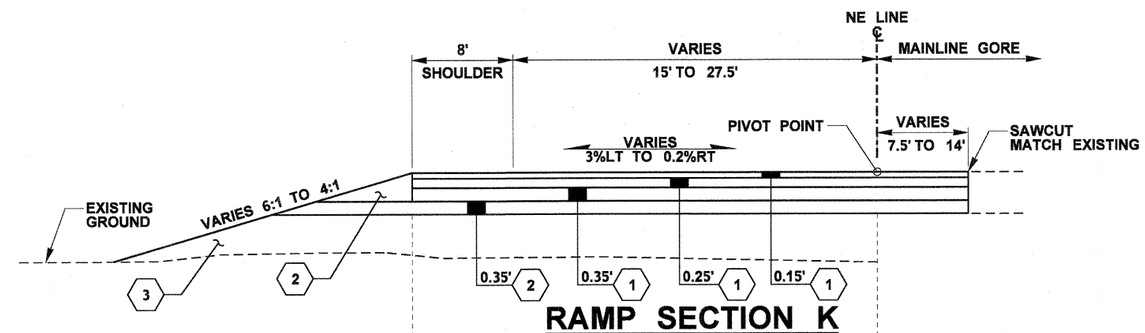

RAMP SECTION K

NOT TO SCALE

NE 122+62.6 TO NE 131+98.2

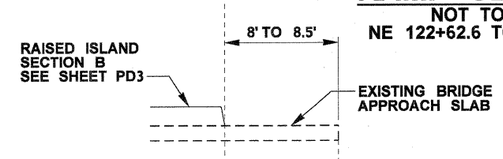

NE 123+08.0 TO NE 123+72.4

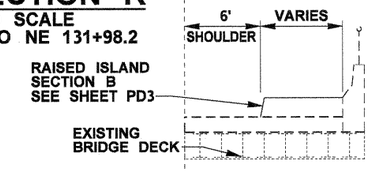

NE 122+64.5 TO NE 123+72.4

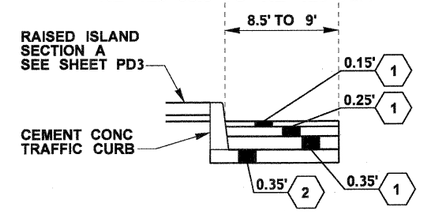

NE 123+72.3 TO NE 124+33.0

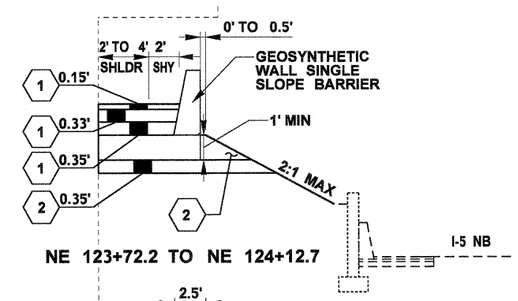

NE 123+72.2 TO NE 124+12.7

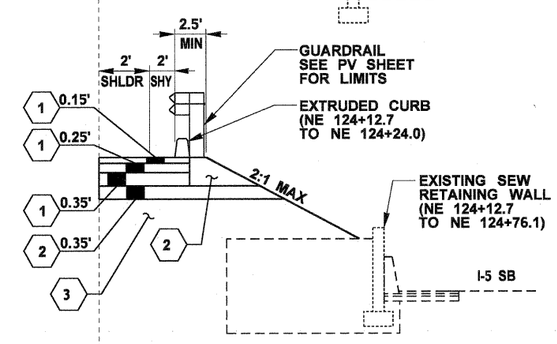

NE 124+12.7 TO NE 127+15.2

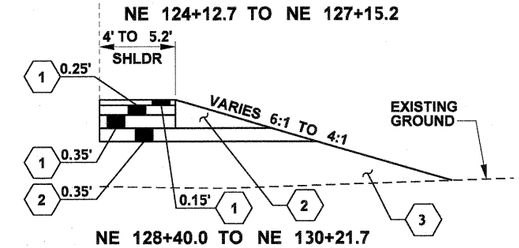

NE 128+40.0 TO NE 130+21.7

LEGEND

1	HMA CL. 1/2 IN. PG 64-22
2	CRUSHED SURFACING BASE COURSE
3	GRAVEL BORROW INCL. HAUL
4	NOT USED
5	PLANING BITUMINOUS PAVEMENT
6	HMA PRELEVELING CL. 1/2 IN. PG 64-22

FILE NAME	U:\PSO\Projects\Clients\1598-TulalipTribes\554-1598-095 116th-Ph4-PSE\99Svcs\CADD\DGN\PS&ESheets\BL1598033_PS_RS.dgn
TIME	4:36:01 PM
DATE	8/24/2017
PLOTTED BY	purgabut
DESIGNED BY	M. TSUN
ENTERED BY	B. PURGANAN
CHECKED BY	D. PROCTOR
APPROVED BY	H. LONGFELLOW

REVISION	DATE	BY

REGION NO.	STATE	FED.AID PROJ.NO.
10	WASH	
JOB NUMBER		
CONTRACT NO.		LOCATION NO.

P.E. STAMP BOX — DATE

HARRY DAVID LONGFELLOW — STATE OF WASHINGTON — 37902 — REGISTERED PROFESSIONAL ENGINEER — 8/24/17

P.E. STAMP BOX — DATE

TULALIP TRIBES — Parametrix ©

I-5 / 116TH STREET NE INTERCHANGE IMPROVEMENTS PHASE 4 RAMPS

ROADWAY SECTIONS

Plot 5

PLAN REF NO RS5

SHEET 8 OF 238 SHEETS

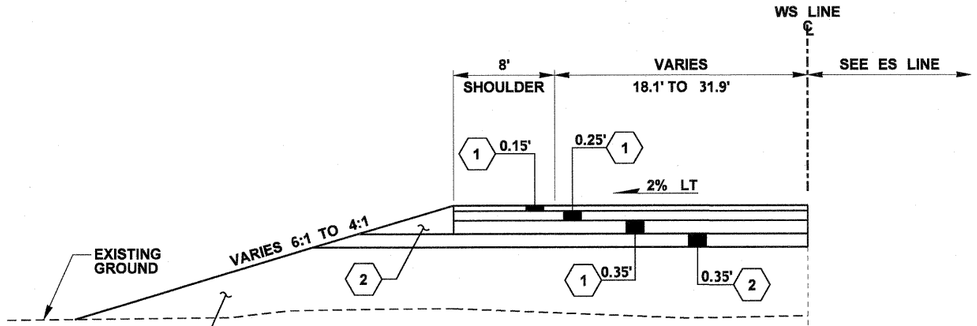

RAMP SECTION L

NOT TO SCALE

WS 121+43.7 TO WS 122+67.2

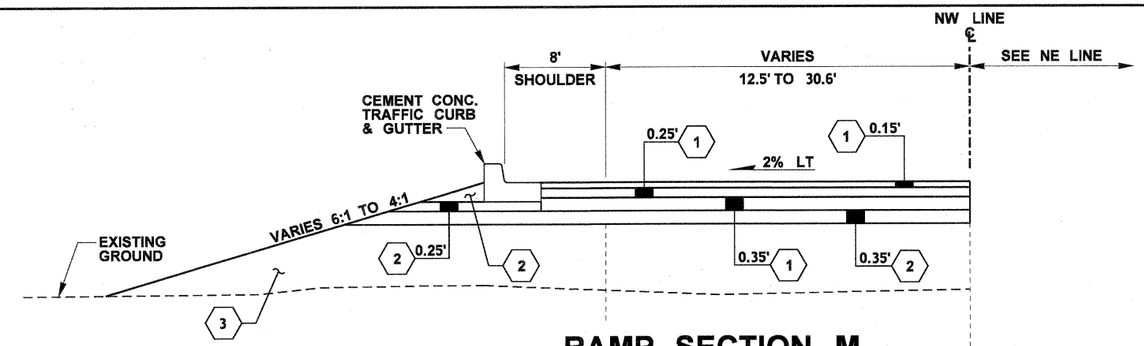

RAMP SECTION M

NOT TO SCALE

NW 122+59.4 TO NW 126+53.2

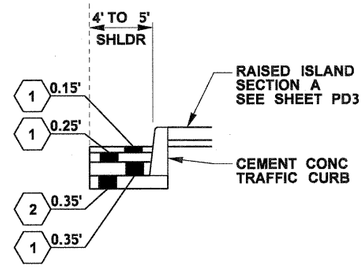

WS 121+65.9 TO WS 122+13.7

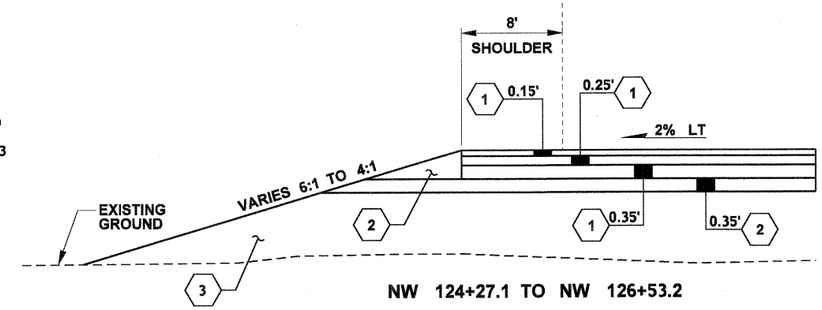

NW 124+27.1 TO NW 126+53.2

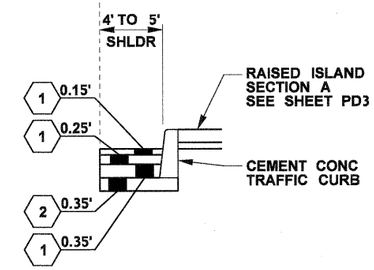

NW 123+04.1 TO NW 124+22.2

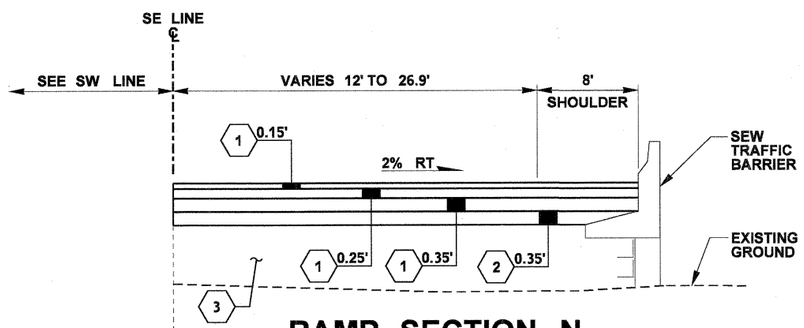

RAMP SECTION N

NOT TO SCALE

SE 119+33.4 TO SE 122+27.7

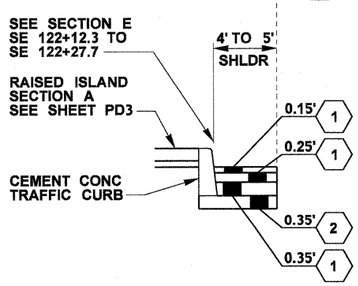

SE 121+12.5 TO SE 122+12.3

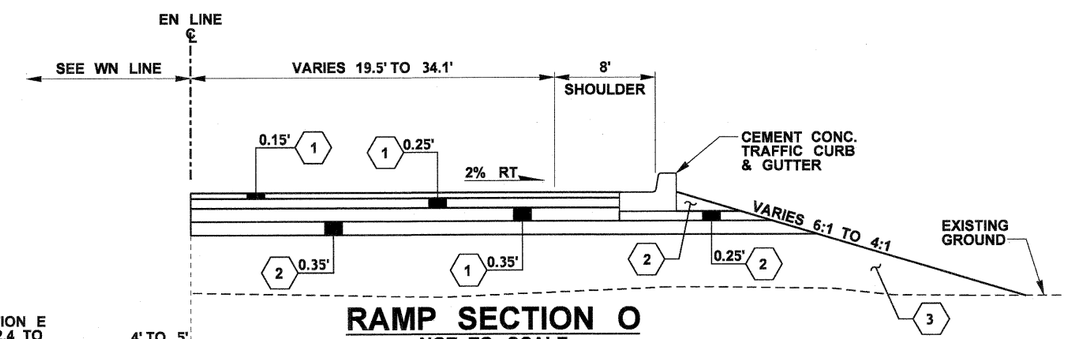

RAMP SECTION O

NOT TO SCALE

EN 122+52.4 TO EN 123+77.7

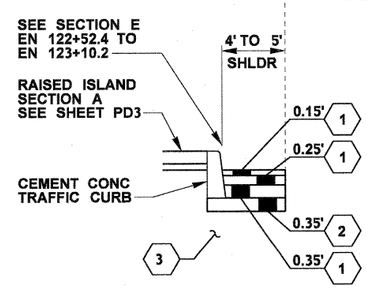

EN 123+10.2 TO EN 123+62.9

LEGEND

1	HMA CL. 1/2 IN. PG 64-22
2	CRUSHED SURFACING BASE COURSE
3	GRAVEL BORROW INCL. HAUL
4	NOT USED
5	PLANING BITUMINOUS PAVEMENT
6	HMA PRELEVELING CL. 1/2 IN. PG 64-22

FILE NAME	U:\PSO\Projects\Clients\1598-TulalipTribes\554-1598-095 116th-Ph4-PSE\99Svcs\CADD\DGN\PS&ESheets\BL1598033_PS_RS.dgn
TIME	4:36:12 PM
DATE	8/24/2017
PLOTTED BY	purgabut
DESIGNED BY	M. TSUN
ENTERED BY	B. PURGANAN
CHECKED BY	D. PROCTOR
APPROVED BY	H. LONGFELLOW

REVISION | DATE | BY

REGION NO. 10 | STATE WASH | FED.AID PROJ.NO.

JOB NUMBER

CONTRACT NO. | LOCATION NO.

P.E. STAMP BOX — DATE

HAPPY DAVID LONGFELLOW — 37902 — REGISTERED PROFESSIONAL ENGINEER — P.E. STAMP BOX — DATE

TULALIP TRIBES — Parametrix

I-5 / 116TH STREET NE
INTERCHANGE IMPROVEMENTS
PHASE 4 RAMPS

ROADWAY SECTIONS

Plot 6

PLAN REF NO RS6

SHEET 9 OF 238 SHEETS

QUANTITY TABULATION - STAGING

NOTE:
THE FIRST NUMBER OF THE "CODE" BELOW REFERS TO THE SHEET NO. OR THE SHEET REFERENCE NO. SHOWING THE CONSTRUCTION FEATURE.

THE SECOND NUMBER REFERS TO THE CONSTRUCTION FEATURE FOUND ON THAT SHEET.

CODE	LOCATION ↓ \ UNIT OF MEASURE →	TEMPORARY CONCRETE BARRIER	TEMPORARY IMPACT ATTENTUATOR	TEMPORARY PAVEMENT MARKING		TEMPORARY PAVEMENT MARKING											SEE GENERAL NOTES
		L.F.	EACH	L.F.		EACH											
SU1-1	LM 224+54.2 (275.2' RT) TO LM 237+84.8 (70.3' RT)			1,378													1, 3
SU1-2	LM 227+91.0 (146.0' LT)		1														1
SU1-3	LM 224+96.0 (31.6' LT) TO LM 227+91.0 (146.0' LT)	341															1
SU2-1	LM 232+04.0 (88.0' LT)		1														1
SU2-2	LM 229+03.0 (115.2' LT) TO LM 232+04.0 (88.0' LT)	302															1
SU4-1	NOT USED																
SU4-2	NOT USED																
SU4-3	LM 211+70.0 (90.5' RT)		1														1
SU4-4	LM 213+63.0 (87.8' LT) TO LM 218+84.0 (164.1' LT)	530															1
SU4-5	LM 218+84.0 (164.1' LT)		1														1
SU4-6	LM 211+70.0 (90.5' RT) TO LM 215+02.0 (109.4' RT)	332															1
SU4-7	LM 216+54.0 (136.6' RT)		1														1
SU4-8	LM 216+54.0 (136.6' RT) TO LM 218+61.0 (224.9' RT)	227															1
																	1
	SHEET TOTAL	1,732	5	1,378		0											
	STAGE TOTAL	**1,732**	**5**	**1,378**		**0**											

GENERAL NOTES:

1. INCLUDED IN LUMP SUM BID ITEM "PROJECT TEMPORARY TRAFFIC CONTROL".
2. NOT USED
3. EDGE LINE
4. LANE LINE-BROKEN
5. LANE LINE-SOLID
6. PAINTED STOP LINE
7. DOUBLE YELLOW CENTERLINE
8. PAINTED TRAFFIC ARROW

DESIGNED BY	B. THOMAS				
ENTERED BY	M. TSUN				
CHECKED BY	D. PROCTOR				
APPROVED BY	H. LONGFELLOW				
		DATE	DATE	REVISION	BY

REGION NO.	
10	WASH
JOB NUMBER	
CONTRACT NO.	

FED. AID PROJ. NO.

TULALIP TRIBES ©
Parametrix

I-5 / 116TH STREET NE
INTERCHANGE IMPROVEMENTS
PHASE 4 RAMPS

QUANTITY TABULATION - STAGING
STAGE 1A

QTSU1

SHEET 10 OF 238 SHEETS

QUANTITY TABULATION - STAGING

NOTE:
THE FIRST NUMBER OF THE "CODE" BELOW REFERS TO THE SHEET NO. OR THE SHEET REFERENCE NO. SHOWING THE CONSTRUCTION FEATURE.

THE SECOND NUMBER REFERS TO THE CONSTRUCTION FEATURE FOUND ON THAT SHEET.

CODE	LOCATION ➢ \ UNIT OF MEASURE ➢	TEMPORARY CONCRETE BARRIER	TEMPORARY IMPACT ATTENTUATOR	TEMPORARY PAVEMENT MARKING		TEMPORARY PAVEMENT MARKING											SEE GENERAL NOTES
		L.F.	EACH	L.F.		EACH											
SU6-1	LM 216+19.0 (77.1' LT) TO LM 219+93.0 (199.0' LT)	400															1
SU6-2	LM 219+93.0 (199.0' LT)		1														1
SU6-3	LM 220+49.0 (294.5' RT) TO M 116+97.0 (40.9' RT)	782															1
SU6-4	LM 220+49.0 (294.5' RT)		1														1
SU6-5	LM 212+98.0 (68.4' RT) TO LM 219+13.0 (213.2' RT)	636															1
SU6-6	LM 224+89.0 (64.2' RT)		1														1
SU6-7	M 116+97.0 (40.9' RT)		1														1
SU6-8	M 116+73.0 (69.0' RT)		1														1
SU6-9	M 117+26.0 (252.3' LT)		1														1
SU6-10	M 116+73.0 (43.7' LT) TO M 123+08.0 (54.9' LT)	633															1
SU6-11	M 125+63.0 (52.9' LT)		1														1
SU6-12	M 124+24.0 (56.5' LT) TO M 125+63.0 (52.9' LT)	139															1
SU6-13	LM 225+38.0 (190.4' RT)		1														1
SU6-14	LM 216+18.0 (61.1' LT) TO LM 221+56.0 (64.2' LT)	539															1
SU6-15	LM 212+98.0 (68.4' RT) TO LM 220+34.0 (59.3' RT)	736															1
SU6-16	LM 224+96.0 (62.7' LT) TO LM 231+00.0 (68.0' LT)	604															1
SU6-17	LM 224+89.0 (64.3' RT) TO LM 229+35.0 (64.2' RT)	446															1
SU6-18	LM 225+38.0 (190.4' RT) TO LM 229+35.0 (74.7' RT)	420															1
SU6-19	M 116+73.0 (69.0' RT) TO M 117+44.0 (190.6' RT)	144															1
SU6-20	M 124+51.0 (31.7' RT)		1														1
SU6-21	M 124+51.0 (31.7' RT) TO M 125+39.0 (31.6' RT)	88															1
SU6-22	LM 221+56.0 (64.2' LT)		1														1
SU6-23	M 123+08.0 (54.9' LT)		1														1
SU6-24	M 116+66.0 (84.2' LT) TO M 117+26.0 (252.3' LT)	180															1
SU7-1	LM 212+98.0 (68.4' RT)		1														1
SU8-1	LM 231+00.0 (67.9' LT)		1														1
SU8-2	LM 226+38.0 (195.4' LT) TO LM 231+00.0 (67.9' LT)	485															1
	SHEET TOTAL	6,232	13	0		0											
	STAGE TOTAL	**6,232**	**13**	**0**		**0**											

GENERAL NOTES:

1. INCLUDED IN LUMP SUM BID ITEM "PROJECT TEMPORARY TRAFFIC CONTROL".
2. NOT USED
3. EDGE LINE
4. LANE LINE-BROKEN
5. LANE LINE-SOLID
6. PAINTED STOP LINE
7. DOUBLE YELLOW CENTERLINE
8. PAINTED TRAFFIC ARROW

DESIGNED BY	B. THOMAS				
ENTERED BY	M. TSUN				
CHECKED BY	D. PROCTOR				
APPROVED BY	H. LONGFELLOW				
		DATE	DATE	REVISION	BY

REGION NO.	STATE	FED. AID PROJ. NO.
10	WASH	

JOB NUMBER

CONTRACT NO.

TULALIP TRIBES
Parametrix

I-5 / 116TH STREET NE
INTERCHANGE IMPROVEMENTS
PHASE 4 RAMPS

QUANTITY TABULATION - STAGING
STAGE 1B

QTSU2

SHEET 11 OF 238 SHEETS

QUANTITY TABULATION - STAGING

NOTE:
THE FIRST NUMBER OF THE "CODE" BELOW REFERS TO THE SHEET NO. OR THE SHEET REFERENCE NO. SHOWING THE CONSTRUCTION FEATURE.

THE SECOND NUMBER REFERS TO THE CONSTRUCTION FEATURE FOUND ON THAT SHEET.

CODE	LOCATION ↓ \ UNIT OF MEASURE →	TEMPORARY CONCRETE BARRIER	TEMPORARY IMPACT ATTENTUATOR	TEMPORARY PAVEMENT MARKING		TEMPORARY PAVEMENT MARKING											SEE GENERAL NOTES
		L.F.	EACH	L.F.		EACH											
SU9-1	A3T 400+00.0 (0.0' RT) TO A3T 412+79.3 (1.7' RT)			1280													1, 3
SU9-2	A3T 400+00.1 (13.0' LT) TO A3T 412+15.5 (14.1' LT)			1211													1, 3
SU9-3	A3T 403+98.0 (3.0' RT) TO A3T 410+08.0 (4.7' RT)	612															1
SU9-4	A3T 410+08.0 (4.7' RT)		1														1
SU9-5	A3T 409+90.0 (20.0' LT)		1														1
SU9-6	B3T 500+00.0 (0.0' RT) TO B3T 511+49.0 (0.0' RT)			1149													1, 3
SU9-7	B3T 500+00.0 (14.0' RT) TO B3T 508+64.4 (13.0' RT)			861													1, 3
SU9-8	B3T 503+62.0 (15.0' RT)		1														1
SU9-9	B3T 503+23.0 (13.8' LT) TO B3T 509+59.0 (3.0' LT)	637															1
SU9-10	B3T 503+62.0 (15.0' RT) TO B3T 508+22.0 (15.6' RT)	459															1
SU9-11	C3T 601+26.4 (0.0' LT) TO C3T 611+21.3 (0.0' LT)			995													1, 3
SU9-12	A3T 405+65.0 (16.0' LT) TO A3T 409+90.0 (20.0' LT)	418															1
SU9-13	D3T 700+60.4 (2.9' LT) TO D3T 710+91.0 (0.0' LT)			1031													1, 3
SU9-14	D3T 702+93.0 (8.2' LT)		1														1
SU9-15	D3T 702+93.0 (8.2' LT) TO D3T 708+11.0 (3.0' LT)	521															1
SU9-16	D3T 700+94.3 (17.9' RT) TO LM 233+92.8 (78.9' RT)			1052													1, 3
SU9-17	NOT USED																
SU9-18	NOT USED																
SU9-19	NOT USED																
SU9-20	M 122+26.0 (50.5' RT)		1														1
SU10-1	C3T 603+54.0 (3.0' RT) TO C3T 608+33.0 (9.0' RT)	481															1
SU10-2	C3T 604+48.1 (12.0' LT) TO C3T 610+12.4 (14.0' LT)			561													1, 3
SU10-3	C3T 608+33.0 (9.0' RT)		1														1
	SHEET TOTAL	3,128	6	8,140		0											
	STAGE TOTAL	3,128	6	8,140		0											

GENERAL NOTES:

1. INCLUDED IN LUMP SUM BID ITEM "PROJECT TEMPORARY TRAFFIC CONTROL".
2. NOT USED
3. EDGE LINE
4. LANE LINE-BROKEN
5. LANE LINE-SOLID
6. PAINTED STOP LINE
7. DOUBLE YELLOW CENTERLINE
8. PAINTED TRAFFIC ARROW

DESIGNED BY	B. THOMAS				
ENTERED BY	M. TSUN				
CHECKED BY	D. PROCTOR				
APPROVED BY	H. LONGFELLOW				
		DATE	DATE	REVISION	BY

REGION NO.	STATE	FED. AID PROJ. NO.
10	WASH	

JOB NUMBER

CONTRACT NO.

TULALIP TRIBES ©
Parametrix

I-5 / 116TH STREET NE
INTERCHANGE IMPROVEMENTS
PHASE 4 RAMPS

QUANTITY TABULATION - STAGING
STAGE 2

QTSU3

SHEET 12 OF 238 SHEETS

QUANTITY TABULATION - STAGING

NOTE:
THE FIRST NUMBER OF THE "CODE" BELOW REFERS TO THE SHEET NO. OR THE SHEET REFERENCE NO. SHOWING THE CONSTRUCTION FEATURE.

THE SECOND NUMBER REFERS TO THE CONSTRUCTION FEATURE FOUND ON THAT SHEET.

CODE	LOCATION ↓ \ UNIT OF MEASURE →	TEMPORARY CONCRETE BARRIER	TEMPORARY IMPACT ATTENTUATOR	TEMPORARY PAVEMENT MARKING		TEMPORARY PAVEMENT MARKING											SEE GENERAL NOTES
		L.F.	EACH	L.F.		EACH											
SU11-1	A4T 804+09.0 (12.0' LT) TO M 117+18.8 (41.0' RT)			1343													1, 3
SU11-2	LM 207+96.2 (56.0' LT) TO A4T 810+07.6 (20.9' RT)			772													1, 3
SU11-3	A4T 804+09.0 (0.0' RT) TO A4T 817+25.7 (0.0' RT)			1316													1, 3
SU11-4	B4T 901+63.3 (7.9' RT) TO M 123+14.8 (38.1' RT)			1320													1, 3
SU11-5	B4T 901+72.7 (5.5' LT) TO B4T 914+52.3 (0.0' LT)			1279													1, 3
SU11-6	LM 209+69.4 (56.0' RT) TO B4T 905+29.8 (22.5' LT)			403													1, 3
SU12-1	A4T 809+07.0 (15.0' LT) TO A4T 815+32.0 (51.6' LT)	651															1
SU12-2	A4T 815+32.0 (51.6' LT)		1														1
SU12-3	A4T 815+61.07 (46.2' LT) TO A4T 815+69.05 (34.7' LT)			15													1, 6
SU12-4	A4T 815+47.02 (15.0' LT) TO A4T 816+99.42 (15.0' LT)			165													1, 3
SU12-5	M 118+78.41 (5.0' RT) TO M 118+78.41 (29.0' RT)			24													1, 6
SU12-6	M 116+24.59 (53.0' LT) TO C4T 1012+17.52 (12.0' LT)			1494													1, 3
SU12-7	M 117+06.73 (41.0' LT) TO M 119+54.06 (41.0' LT)			248													1, 3
SU12-8	M 117+62.25 (41.0' LT) TO C4T 1002+70.01 (17.6' LT)			273													1, 3
SU12-9	C4T 1000+19.56 (15.0' LT) TO C4T 1002+69.97 (16.2' LT)			262													1, 3
SU12-10	C4T 1000+00.00 (0.0' LT) TO C4T 1012+17.52 (0.0' LT)			1218													1, 3
SU12-11	M 118+27.77 (30.0' LT) TO B4T 913+41.30 (16.0' RT)			291													1, 4
SU12-12	M 119+36.09 (2.1' RT) TO M 120+32.30 (41.0' LT)			107													1, 4
SU12-13	M 119+79.09 (41.0' LT) TO M 120+19.28 (17.0' LT)			47													1, 4
SU12-14	M 119+79.09 (41.0' LT) TO M 120+32.30 (41.0' LT)			53													1, 3
SU12-15	M 120+19.28 (17.0' LT) TO M 120+44.37 (5.7' LT)			28													1, 5
SU12-16	M 120+44.37 (5.7' LT) TO M 120+82.58 (6.8' RT)			40													1, 4
SU12-17	D4T 1100+00 (0.0' RT) TO D4T 1112+42.90 (0.0' LT)			1243													1, 3
SU12-18	D4T 1100+16.69 (15.0' RT) TO D4T 1101+42.81 (15.0' RT)			135													1, 3
SU12-19	M 122+59.41 (53.0' LT) TO D4T 1116+08.35 (12.0' RT)			1643													1, 3
SU12-20	D4T 1101+22.43 (27.5' RT) TO D4T 1101+30.15 (39.5' RT)			15													1, 6
SU12-21	D4T 1101+42.81 (15.0' RT) TO M 122+58.91 (41.0' LT)			195													1, 3
SU12-22	M 121+19.50 (17.0' LT) TO M 121+19.59 (41.0' LT)			24													1, 6
SU12-23	M 120+19.40 (16.0' LT) TO M 125+75.23 (13.7' LT)			554													1, 3
SU12-24	M 120+44.60 (5.0' RT) TO M 125+75.23 (13.7' LT)			531													1, 3
	SHEET TOTAL	651	1	15,038		0											

GENERAL NOTES:

1. INCLUDED IN LUMP SUM BID ITEM "PROJECT TEMPORARY TRAFFIC CONTROL".
2. NOT USED
3. EDGE LINE
4. LANE LINE-BROKEN
5. LANE LINE-SOLID
6. PAINTED STOP LINE
7. DOUBLE YELLOW CENTERLINE
8. PAINTED TRAFFIC ARROW

DESIGNED BY	B. THOMAS			
ENTERED BY	M. TSUN			
CHECKED BY	D. PROCTOR			
APPROVED BY	H. LONGFELLOW			
		DATE	DATE	REVISION	BY

REGION NO.	STATE	FED. AID PROJ. NO.
10	WASH	

JOB NUMBER

CONTRACT NO.

TULALIP TRIBES
Parametrix

I-5 / 116TH STREET NE
INTERCHANGE IMPROVEMENTS
PHASE 4 RAMPS

QUANTITY TABULATION - STAGING
STAGE 3

QTSU4

SHEET 13 OF 238 SHEETS

QUANTITY TABULATION - STAGING

NOTE:
THE FIRST NUMBER OF THE "CODE" BELOW REFERS TO THE SHEET NO. OR THE SHEET REFERENCE NO. SHOWING THE CONSTRUCTION FEATURE.

THE SECOND NUMBER REFERS TO THE CONSTRUCTION FEATURE FOUND ON THAT SHEET.

CODE	LOCATION ↓ \ UNIT OF MEASURE →	TEMPORARY CONCRETE BARRIER	TEMPORARY IMPACT ATTENTUATOR	TEMPORARY PAVEMENT MARKING		TEMPORARY PAVEMENT MARKING											SEE GENERAL NOTES
		L.F.	EACH	L.F.		EACH											
SU12-25	M 121+19.50 (29.00' LT) TO M 129+16.94 (17.17' LT)			798													1, 3
SU12-26	M 120+82.6 (6.8' RT) TO M 128+5.0 (7.8' LT)			723													1, 7
SU12-27	M 120+82.6 (6.8' RT) TO M 128+5.0 (5.0' LT)			727													1, 7
SU12-28	M 122+19.81 (29.82' RT) TO M 126+73.77 (17.10' RT)			455													1, 4
SU12-29	M 118+50.0					1											1, 8
SU12-30	M 121+19.46 (5.00' LT) M 121+19.41 (7.00' RT)			12													1, 6
SU12-31	M 119+87.16 (27.49' RT) TO M 120+83.51 (7.00' RT)			100													1, 5
SU12-32	M 120+47.92 (29.00' RT) TO M 122+19.81 (29.82' RT)			172													1, 3
SU12-33	B4T 911+48.11 (32.10' RT) TO M 122+19.81 (29.82' RT)			266													1, 3
SU12-34	B4T 904+32.0 (21.35' RT)		1														1
SU12-35	B4T 904+32.0 (21.35' RT) TO B4T 910+81 (53.00' RT)	655															1
SU12-36	B4T 910+88.0 (16.00' RT) TO B4T 913+41.30 (16.00' RT)			266													1, 3
SU12-37	B4T 910+87.66 (32.00' RT) TO B4T 914+02.92 (32.00' RT)			346													1, 3
SU12-39	D4T 1101+29.0 (54.4' RT)		1														1
SU12-40	NOT USED																
SU12-41	B4T 913+41.5 (0.0' LT TO 32.0' LT)			32													1, 6
SU12-42	C4T 1000+65.0 (0.0' RT TO 16.0' RT)			15													1, 6
SU12-43	B4T 911+25.0					3											1, 8
SU12-44	NOT USED																
SU12-45	M 116+60.0					1											1, 8
SU12-46	M 121+75.0					1											1, 8
SU12-47	M 122+80.0					1											1, 8
SU12-48	C4T 1002+60.0					2											1, 8
	SHEET TOTAL	655	2	3,912		9											

GENERAL NOTES:

1. INCLUDED IN LUMP SUM BID ITEM "PROJECT TEMPORARY TRAFFIC CONTROL".
2. NOT USED
3. EDGE LINE
4. LANE LINE-BROKEN
5. LANE LINE-SOLID
6. PAINTED STOP LINE
7. DOUBLE YELLOW CENTERLINE
8. PAINTED TRAFFIC ARROW

DESIGNED BY	B. THOMAS				
ENTERED BY	M. TSUN				
CHECKED BY	D. PROCTOR				
APPROVED BY	H. LONGFELLOW				
		DATE	DATE	REVISION	BY

REGION NO.	STATE	FED. AID PROJ. NO.
10	WASH	

JOB NUMBER

CONTRACT NO.

TULALIP TRIBES ©
Parametrix

I-5 / 116TH STREET NE
INTERCHANGE IMPROVEMENTS
PHASE 4 RAMPS

QUANTITY TABULATION - STAGING
STAGE 3

QTSU5

SHEET 14 OF 238 SHEETS

QUANTITY TABULATION - STAGING

NOTE:
THE FIRST NUMBER OF THE "CODE" BELOW REFERS TO THE SHEET NO. OR THE SHEET REFERENCE NO. SHOWING THE CONSTRUCTION FEATURE.

THE SECOND NUMBER REFERS TO THE CONSTRUCTION FEATURE FOUND ON THAT SHEET.

CODE	LOCATION ➢ \ UNIT OF MEASURE ➢	TEMPORARY CONCRETE BARRIER	TEMPORARY IMPACT ATTENTUATOR	TEMPORARY PAVEMENT MARKING		TEMPORARY PAVEMENT MARKING											SEE GENERAL NOTES
		L.F.	EACH	L.F.		EACH											
SU13-1	M 109+80.56 (30.00' LT) TO M 110+44.83 (30.00' LT)			65													1, 3
SU13-2	NOT USED																
SU13-3	M 109+80.51 (18.00' LT) TO M 118+27.77 (29.00' LT)			847													1, 4
SU13-4	M 113+39.60 (154.52' LT) TO M 116+24.60 (53.00' LT)			300													1, 3
SU13-5	M 114+29.37 (41.00' LT) TO M 117+12.25 (41.00' LT)			283													1, 4
SU13-6	M 110+32.06 (7.36' RT) TO M 119+36.09 (2.07' RT)			907													1, 7
SU13-7	M 109+39.83 (18.00' RT) TO M 115+25.67 (29.00' RT)			586													1, 4
SU13-8	M 110+20.92 (77.55' RT) TO M 113+23.15 (151.81' RT)			384													1, 3
SU13-9	M 110+31.96 (8.00' RT) TO M 119+36.09 (2.07' RT)			904													1, 7
SU13-10	M 113+76.5 (52.8' RT) TO M 117+18.8 (41.0' RT)			343													1, 3
SU13-11	M 114+30.00 (17.00' RT) TO M 118+78.41 (17.00' RT)			448													1, 5
SU13-12	M 115+25.67 (29.00' RT) TO M 119+55.58 (29.00' RT)			430													1, 5
SU13-13	M 126+48.35 (35.89' LT) TO M 127+50.39 (33.34' LT)			102													1, 3
SU13-14	M 126+48.48.35 (35.89' LT) TO M 126+72.17 (82.61' LT)			54													1, 3
SU13-15	M 126+72.17 (82.61' LT) TO M 127+17.98 (34.15' LT)			73													1, 3
SU13-16	NOT USED																
SU13-17	NOT USED																
SU13-18	C4T 1003+61.0 (38.57' LT) TO C4T 1007+55.0 (23.00' LT)	395															1
SU13-19	C4T 1007+55.0 (23.00' LT)		1														1
SU13-20	C4T 1007+31.00 (24.45' RT) TO C4T 1012+17.52 (0.00' RT)			488													1, 3
SU13-21	D4T 1101+30.0 (54.4' RT) TO D4T 1107+31.0 (15.00' RT)	622															1
SU13-22	D4T 1106+38.20 (20.83' LT) TO D4T 1116+08.35 (0.00' RT)			971													1, 3
	SHEET TOTAL	1,017	1	7,185		0											
	STAGE TOTAL	2,323	4	26,135		9											
	PROJECT TOTAL	**13,415**	**28**	**35,653**		**9**											

GENERAL NOTES:

1. INCLUDED IN LUMP SUM BID ITEM "PROJECT TEMPORARY TRAFFIC CONTROL".
2. NOT USED
3. EDGE LINE
4. LANE LINE-BROKEN
5. LANE LINE-SOLID
6. PAINTED STOP LINE
7. DOUBLE YELLOW CENTERLINE
8. PAINTED TRAFFIC ARROW

DESIGNED BY	B. THOMAS
ENTERED BY	M. TSUN
CHECKED BY	D. PROCTOR
APPROVED BY	H. LONGFELLOW

DATE	DATE	REVISION	BY

REGION NO.	STATE	FED. AID PROJ. NO.
10	WASH	

JOB NUMBER

CONTRACT NO.

TULALIP TRIBES ©
Parametrix

I-5 / 116TH STREET NE
INTERCHANGE IMPROVEMENTS
PHASE 4 RAMPS

QUANTITY TABULATION - STAGING
STAGE 3

QTSU6

SHEET 15 OF 238 SHEETS

LEGEND

- TEMPORARY CONCRETE BARRIER
- WORK AREA
- PERMANENT RETAINING WALL
- TEMPORARY RETAINING WALL
- TRAFFIC SAFETY DRUMS WITH TYPE C WARNING LIGHTS
- TEMPORARY IMPACT ATTENUATOR (SEE NOTE 7)
- SIGN LOCATION
- QUANTITY TAB NOTE
- EXISTING CABLE BARRIER
- EXISTING CONCRETE BARRIER

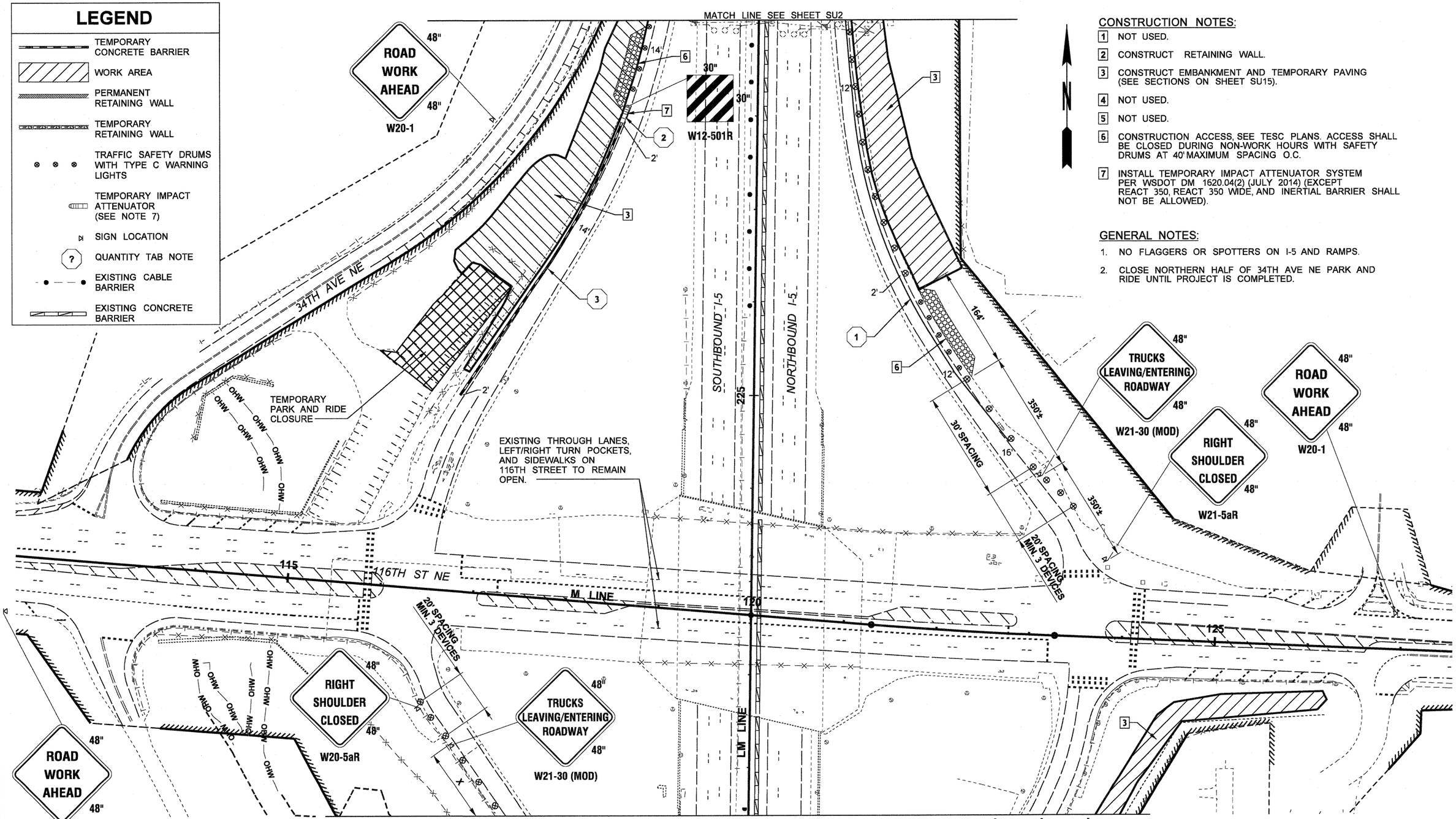

CONSTRUCTION NOTES:

1. NOT USED.
2. CONSTRUCT RETAINING WALL.
3. CONSTRUCT EMBANKMENT AND TEMPORARY PAVING (SEE SECTIONS ON SHEET SU15).
4. NOT USED.
5. NOT USED.
6. CONSTRUCTION ACCESS, SEE TESC PLANS. ACCESS SHALL BE CLOSED DURING NON-WORK HOURS WITH SAFETY DRUMS AT 40' MAXIMUM SPACING O.C.
7. INSTALL TEMPORARY IMPACT ATTENUATOR SYSTEM PER WSDOT DM 1620.04(2) (JULY 2014) (EXCEPT REACT 350, REACT 350 WIDE, AND INERTIAL BARRIER SHALL NOT BE ALLOWED).

GENERAL NOTES:

1. NO FLAGGERS OR SPOTTERS ON I-5 AND RAMPS.
2. CLOSE NORTHERN HALF OF 34TH AVE NE PARK AND RIDE UNTIL PROJECT IS COMPLETED.

STAGE 1A

FILE NAME	U:\PSO\Projects\Clients\1598-TulalipTribes\554-1598-095 116th-Ph4-PSE\99Svcs\CADD\DGN\PS&ESheets\BL1598033_PS_SU.dgn
TIME	4:42:02 PM
DATE	8/24/2017
PLOTTED BY	purgabut
DESIGNED BY	M. TSUN
ENTERED BY	B. PURGANAN
CHECKED BY	D. PROCTOR
APPROVED BY	H. LONGFELLOW

REVISION	DATE	BY

REGION NO.	STATE	FED.AID PROJ.NO.
10	WASH	
JOB NUMBER		
CONTRACT NO.		LOCATION NO.

P.E. STAMP BOX — DATE

P.E. STAMP BOX — DATE

TULALIP TRIBES — Parametrix

I-5 / 116TH STREET NE INTERCHANGE IMPROVEMENTS PHASE 4 RAMPS

STAGE CONSTRUCTION PLAN

Plot 1

PLAN REF NO SU1

SHEET 16 OF 238 SHEETS

CHANNELIZATION DEVICE SPACING (feet)		
MPH	TAPER	TANGENT
50/70	40	80
35/45	30	60
25/30	20	40

MINIMUM TAPER LENGTH = L (feet)										
LANE WIDTH (feet)	Posted Speed (mph)									
	25	30	35	40	45	50	55	60	65	70
10	-	-	-	-	-	-	550	-	-	-
11	-	-	-	-	-	-	605	660	-	-
12	-	-	-	-	-	-	660	720	780	840

BUFFER DATA										
LONGITUDINAL BUFFER SPACE = B										
SPEED (MPH)	25	30	35	40	45	50	55	60	65	70
LENGTH (feet)	155	200	250	305	360	425	495	570	645	730

PROTECTIVE VEHICLE WITH TMA ROLL AHEAD DISTANCE = R		
TYPICAL PROTECTIVE VEHICLE TYPE WITH TMA	TYPICAL PROTECTIVE VEHICLE (WITH TMA) LOADED WEIGHT (LBS)	STATIONARY OPERATION (feet)
4 YARD DUMP TRUCK, SERVICE TRUCK, FLAT BED, ETC.	MINIMUM WEIGHT 15,000 LBS. (MAXIMUM WEIGHT SHALL BE IN ACCORDANCE WITH MANUFACTURER RECOMMENDATIONS)	30

ROLL AHEAD STOPPING SIGHT DISTANCE ASSUMES DRY PAVEMENT

* * A SECOND ATTENUATOR TRUCK SHALL BE USED TO PROTECT THE OPERATOR FOR REMOVAL AND PLACING OF RPM'S.

CONSTRUCTION NOTES:

1. NOT USED.
2. CONSTRUCT RETAINING WALL.
3. CONSTRUCT EMBANKMENT AND TEMPORARY PAVING (SEE SECTIONS ON SHEET SU15).
4. NOT USED.
5. NOT USED.
6. CONSTRUCTION ACCESS, SEE TESC PLANS. ACCESS SHALL BE CLOSED DURING NON-WORK HOURS WITH SAFETY DRUMS AT 40' MAXIMUM SPACING O.C.
7. INSTALL TEMPORARY IMPACT ATTENUATOR SYSTEM PER WSDOT DM 1620.04(2) (JULY 2014) (EXCEPT REACT 350, REACT 350 WIDE, AND INERTIAL BARRIER SHALL NOT BE ALLOWED).

GENERAL NOTES:

1. NO FLAGGERS OR SPOTTERS ON I-5 AND RAMPS.
2. CLOSE NORTHERN HALF OF 34TH AVE NE PARK AND RIDE UNTIL PROJECT IS COMPLETED.

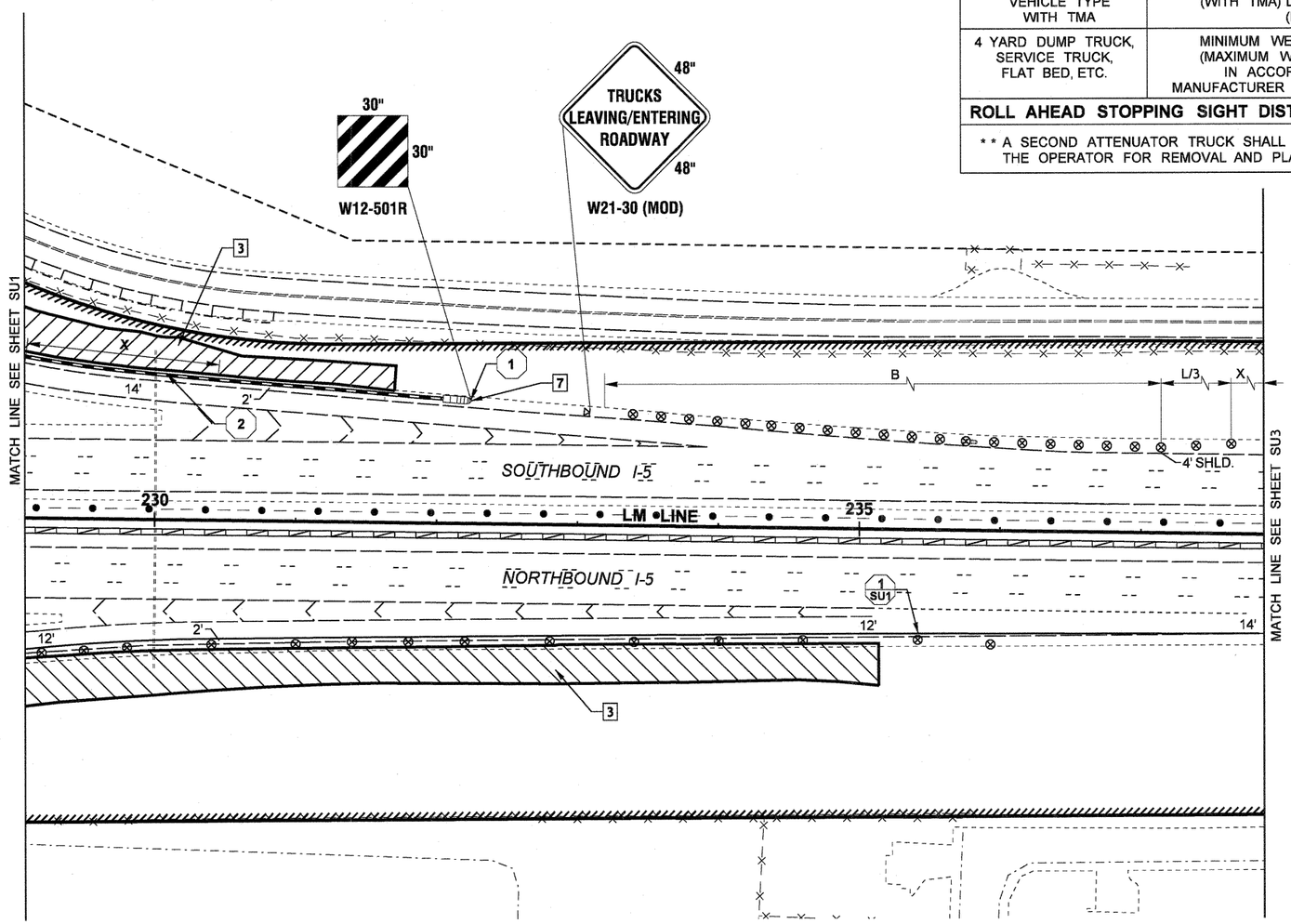

STAGE 1A

SIGN SPACING = X		
FREEWAYS & EXPRESSWAYS	60 / 65 MPH	1500' ± (OR AS PER MUTCD)

(1) ALL SPACING MAY BE ADJUSTED TO ACCOMMODATE INTERCHANGE RAMPS, AT-GRADE INTERSECTIONS AND DRIVEWAYS.
(2) THIS SPACING MAY BE REDUCED IN URBAN AREAS TO FIT ROADWAY CONDITIONS.

LEGEND

- TEMPORARY CONCRETE BARRIER
- WORK AREA
- PERMANENT RETAINING WALL
- TEMPORARY RETAINING WALL
- TRAFFIC SAFETY DRUMS WITH TYPE C WARNING LIGHTS
- TEMPORARY IMPACT ATTENUATOR (SEE NOTE 7)
- SIGN LOCATION
- QUANTITY TAB NOTE
- EXISTING CABLE BARRIER
- EXISTING CONCRETE BARRIER

0 50 100
SCALE IN FEET

FILE NAME	U:\PSO\Projects\Clients\1598-TulalipTribes\554-1598-095 116th-Ph4-PSE\99Svcs\CADD\DGN\PS&ESheets\BL1598033_PS_SU.dgn
TIME	4:42:23 PM
DATE	8/24/2017
PLOTTED BY	purgabut
DESIGNED BY	M. TSUN
ENTERED BY	B. PURGANAN
CHECKED BY	D. PROCTOR
APPROVED BY	H. LONGFELLOW

REVISION | DATE | BY

REGION NO.	STATE	FED.AID PROJ.NO.
10	WASH	
JOB NUMBER		
CONTRACT NO.		LOCATION NO.

P.E. STAMP BOX DATE

STEPHEN DAVID LONGFELLOW STATE OF WASHINGTON 37902 REGISTERED PROFESSIONAL ENGINEER

P.E. STAMP BOX DATE

TULALIP TRIBES Parametrix

I-5 / 116TH STREET NE INTERCHANGE IMPROVEMENTS PHASE 4 RAMPS

STAGE CONSTRUCTION PLAN

Plot 2

PLAN REF NO SU2

SHEET 17 OF 238 SHEETS

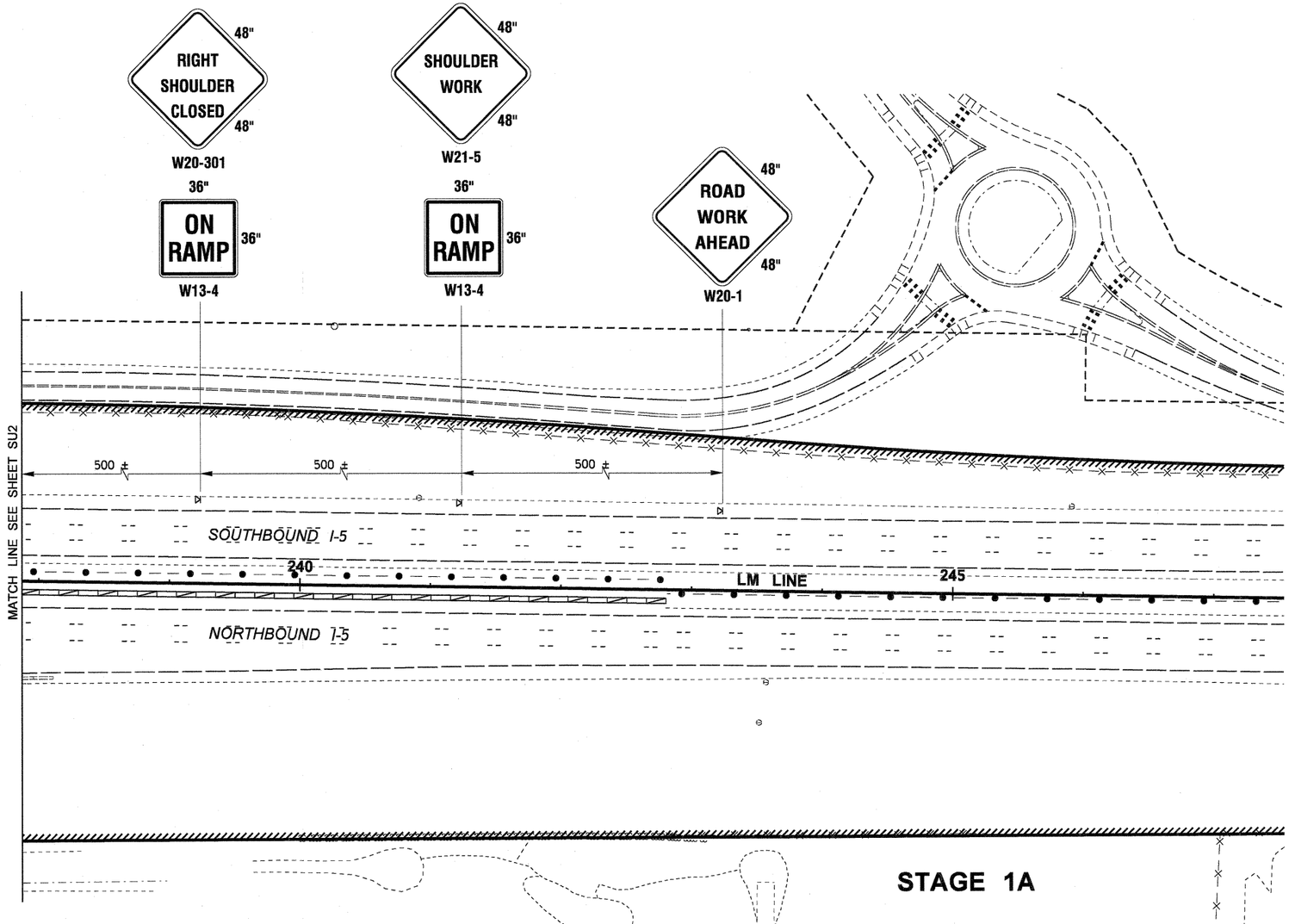

STAGE 1A

CONSTRUCTION NOTES:

1. NOT USED.
2. CONSTRUCT RETAINING WALL.
3. CONSTRUCT EMBANKMENT AND TEMPORARY PAVING (SEE SECTIONS ON SHEET SU15).
4. NOT USED.
5. NOT USED.
6. CONSTRUCTION ACCESS, SEE TESC PLANS. ACCESS SHALL BE CLOSED DURING NON-WORK HOURS WITH SAFETY DRUMS AT 40' MAXIMUM SPACING O.C.
7. INSTALL TEMPORARY IMPACT ATTENUATOR SYSTEM PER WSDOT DM 1620.04(2) (JULY 2014) (EXCEPT REACT 350, REACT 350 WIDE, AND INERTIAL BARRIER SHALL NOT BE ALLOWED).

GENERAL NOTES:

1. NO FLAGGERS OR SPOTTERS ON I-5 AND RAMPS.
2. CLOSE NORTHERN HALF OF 34TH AVE NE PARK AND RIDE UNTIL PROJECT IS COMPLETED.

LEGEND

- TEMPORARY CONCRETE BARRIER
- WORK AREA
- PERMANENT RETAINING WALL
- TEMPORARY RETAINING WALL
- TRAFFIC SAFETY DRUMS WITH TYPE C WARNING LIGHTS
- TEMPORARY IMPACT ATTENUATOR (SEE NOTE 7)
- SIGN LOCATION
- QUESTION MARK: QUANTITY TAB NOTE
- EXISTING CABLE BARRIER
- EXISTING CONCRETE BARRIER

0 50 100
SCALE IN FEET

FILE NAME	U:\PSO\Projects\Clients\1598-TulalipTribes\554-1598-095 116th-Ph4-PSE\99Svcs\CADD\DGN\PS&ESheets\BL1598033_PS_SU.dgn
TIME	4:42:40 PM
DATE	8/24/2017
PLOTTED BY	purgabut
DESIGNED BY	M. TSUN
ENTERED BY	B. PURGANAN
CHECKED BY	D. PROCTOR
APPROVED BY	H. LONGFELLOW

REVISION	DATE	BY

REGION NO.	STATE	FED.AID PROJ.NO.
10	WASH	
JOB NUMBER		
CONTRACT NO.		LOCATION NO.

P.E. STAMP BOX — DATE

HENRY DAVID LONGFELLOW, STATE OF WASHINGTON, 27902, REGISTERED PROFESSIONAL ENGINEER — P.E. STAMP BOX — DATE

TULALIP TRIBES — Parametrix

I-5 / 116TH STREET NE
INTERCHANGE IMPROVEMENTS
PHASE 4 RAMPS

STAGE CONSTRUCTION PLAN

Plot 3
PLAN REF NO SU3
SHEET 18 OF 238 SHEETS

CONSTRUCTION NOTES:

1. NOT USED.
2. CONSTRUCT RETAINING WALL.
3. CONSTRUCT EMBANKMENT AND TEMPORARY PAVING (SEE SECTIONS ON SHEET SU15).
4. NOT USED.
5. NOT USED.
6. CONSTRUCTION ACCESS, SEE TESC PLANS. ACCESS SHALL BE CLOSED DURING NON-WORK HOURS WITH SAFETY DRUMS AT 40' MAXIMUM SPACING O.C.
7. INSTALL TEMPORARY IMPACT ATTENUATOR SYSTEM PER WSDOT DM 1620.04(2) (JULY 2014) (EXCEPT REACT 350, REACT 350 WIDE, AND INERTIAL BARRIER SHALL NOT BE ALLOWED).

GENERAL NOTES:

1. NO FLAGGERS OR SPOTTERS ON I-5 AND RAMPS.
2. CLOSE NORTHERN HALF OF 34TH AVE NE PARK AND RIDE UNTIL PROJECT IS COMPLETED.

LEGEND

- TEMPORARY CONCRETE BARRIER
- WORK AREA
- PERMANENT RETAINING WALL
- TEMPORARY RETAINING WALL
- TRAFFIC SAFETY DRUMS WITH TYPE C WARNING LIGHTS
- TEMPORARY IMPACT ATTENUATOR (SEE NOTE 7)
- SIGN LOCATION
- QUANTITY TAB NOTE
- EXISTING CABLE BARRIER
- EXISTING CONCRETE BARRIER

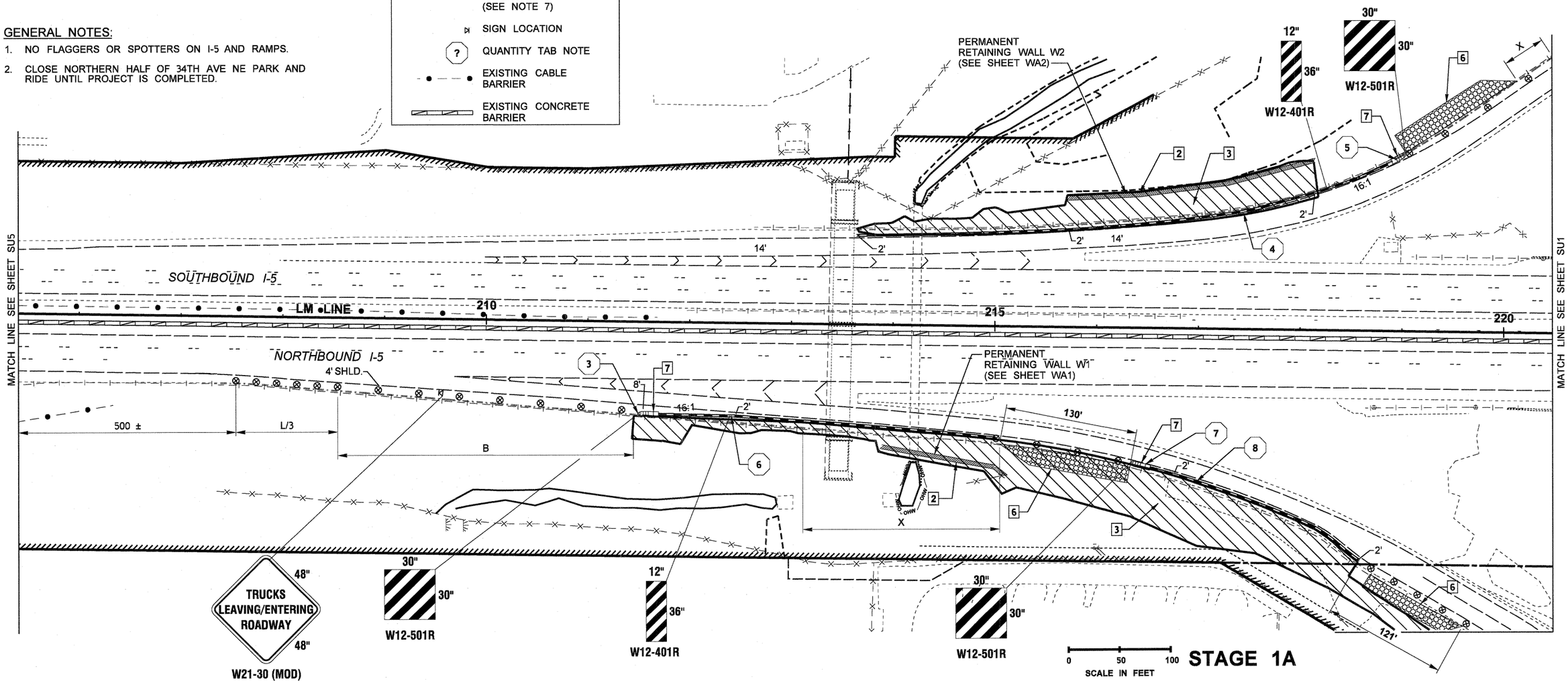

FILE NAME	U:\PSO\Projects\Clients\1598-TulalipTribes\554-1598-095 116th-Ph4-PSE\99Svcs\CADD\DGN\PS&ESheets\BL1598033_PS_SU.dgn
TIME	4:42:53 PM
DATE	8/24/2017
PLOTTED BY	purgabut
DESIGNED BY	M. TSUN
ENTERED BY	B. PURGANAN
CHECKED BY	D. PROCTOR
APPROVED BY	H. LONGFELLOW

REVISION	DATE	BY

REGION NO.	STATE	FED.AID PROJ.NO.
10	WASH	
JOB NUMBER		
CONTRACT NO.		LOCATION NO.

P.E. STAMP BOX — DATE

HERBERT DAVID LONGFELLOW — STATE OF WASHINGTON — 37906 — REGISTERED PROFESSIONAL ENGINEER — 8/24/17

P.E. STAMP BOX — DATE

TULALIP TRIBES — Parametrix

I-5 / 116TH STREET NE INTERCHANGE IMPROVEMENTS PHASE 4 RAMPS

STAGE CONSTRUCTION PLAN

Plot 4

PLAN REF NO SU4

SHEET 19 OF 238 SHEETS

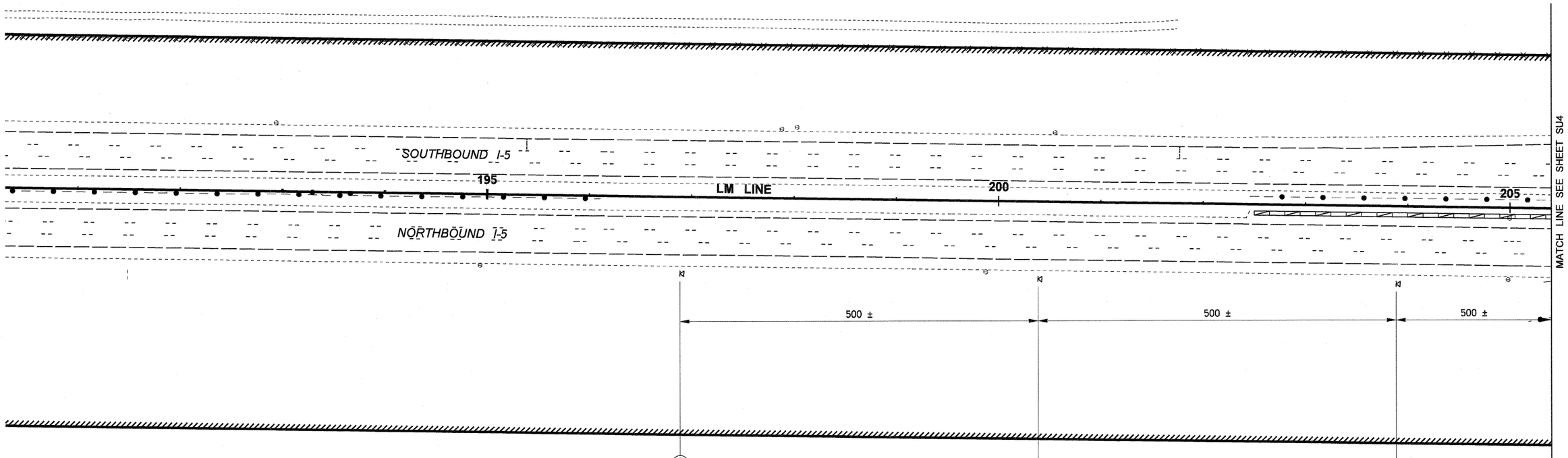

LEGEND

- TEMPORARY CONCRETE BARRIER
- WORK AREA
- PERMANENT RETAINING WALL
- TEMPORARY RETAINING WALL
- TRAFFIC SAFETY DRUMS WITH TYPE C WARNING LIGHTS
- TEMPORARY IMPACT ATTENUATOR (SEE NOTE 7)
- SIGN LOCATION
- QUANTITY TAB NOTE
- EXISTING CABLE BARRIER
- EXISTING CONCRETE BARRIER

CONSTRUCTION NOTES:

1. INSTALL SANITARY SEWER UNDER 116TH BRIDGE (SEE UTILITY PLANS).
2. CONSTRUCT RETAINING WALL.
3. CONSTRUCT EMBANKMENT AND TEMPORARY PAVING (SEE SECTIONS ON SHEET SU15).
4. NOT USED.
5. NOT USED.
6. CONSTRUCTION ACCESS, SEE TESC PLANS. ACCESS SHALL BE CLOSED DURING NON-WORK HOURS WITH SAFETY DRUMS AT 40' MAXIMUM SPACING O.C.
7. INSTALL TEMPORARY IMPACT ATTENUATOR SYSTEM PER WSDOT DM 1620.04(2) (JULY 2014) (EXCEPT REACT 350, REACT 350 WIDE, AND INERTIAL BARRIER SHALL NOT BE ALLOWED).

GENERAL NOTES:

1. NO FLAGGERS OR SPOTTERS ON I-5 AND RAMPS.
2. CLOSE NORTHERN HALF OF 34TH AVE NE PARK AND RIDE UNTIL PROJECT IS COMPLETED.

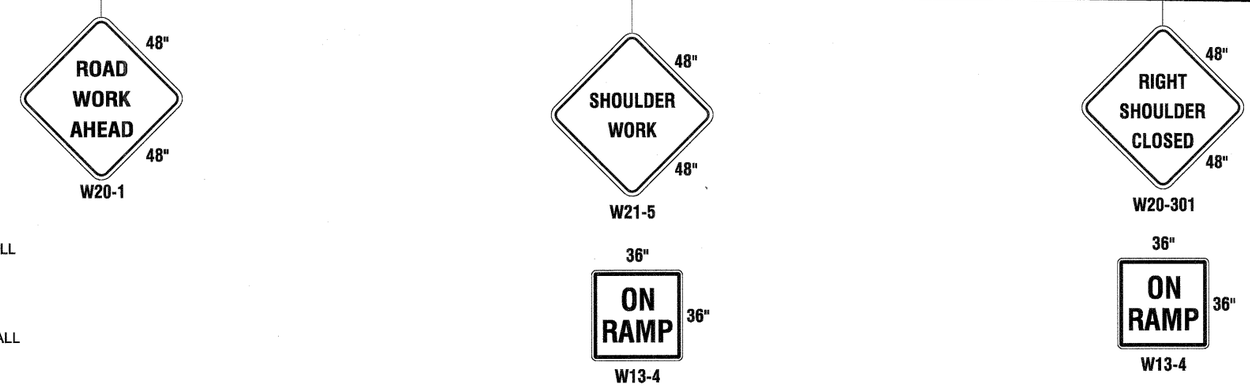

STAGE 1A

0 50 100
SCALE IN FEET

FILE NAME	U:\PSO\Projects\Clients\1598-TulalipTribes\554-1598-095 116th-Ph4-PSE\99Svcs\CADD\DGN\PS&ESheets\BL1598033_PS_SU.dgn					
TIME	4:43:07 PM					
DATE	8/24/2017					
PLOTTED BY	purgabut					
DESIGNED BY	M. TSUN					
ENTERED BY	B. PURGANAN					
CHECKED BY	D. PROCTOR					
APPROVED BY	H. LONGFELLOW					
		REVISION	DATE	BY		

REGION NO.	STATE	FED.AID PROJ.NO.
10	WASH	
JOB NUMBER		
CONTRACT NO.		LOCATION NO.

P.E. STAMP BOX — DATE

P.E. STAMP BOX — DATE

TULALIP TRIBES
Parametrix

I-5 / 116TH STREET NE
INTERCHANGE IMPROVEMENTS
PHASE 4 RAMPS

STAGE CONSTRUCTION PLAN

Plot 5
PLAN REF NO
SU5
SHEET 20 OF 238 SHEETS

GENERAL NOTES:

1. NO FLAGGERS OR SPOTTERS ON I-5 AND RAMPS.
2. CLOSE NORTHERN HALF OF 34TH AVE NE PARK AND RIDE UNTIL PROJECT IS COMPLETED.

CONSTRUCTION NOTES:

1. CONSTRUCT SIGN BRIDGE.
2. INSTALL WATER LINE ON 116TH BRIDGE (SEE UTILITY PLANS).
3. CONSTRUCT PORTION OF PERMANENT RAMPS.
4. INSTALL SANITARY SEWER ON 116TH BRIDGE (SEE UTILITY PLANS).
5. CONSTRUCT RETAINING WALL.
6. CONSTRUCTION ACCESS, SEE TESC PLANS. ACCESS SHALL BE CLOSED DURING NON-WORK HOURS WITH SAFETY DRUMS AT 40' MAXIMUM SPACING O.C.
7. INSTALL TEMPORARY IMPACT ATTENUATOR SYSTEM PER WSDOT DM 1620.04(2) (JULY 2014) (EXCEPT REACT 350, REACT 350 WIDE, AND INERTIAL BARRIER SHALL NOT BE ALLOWED).

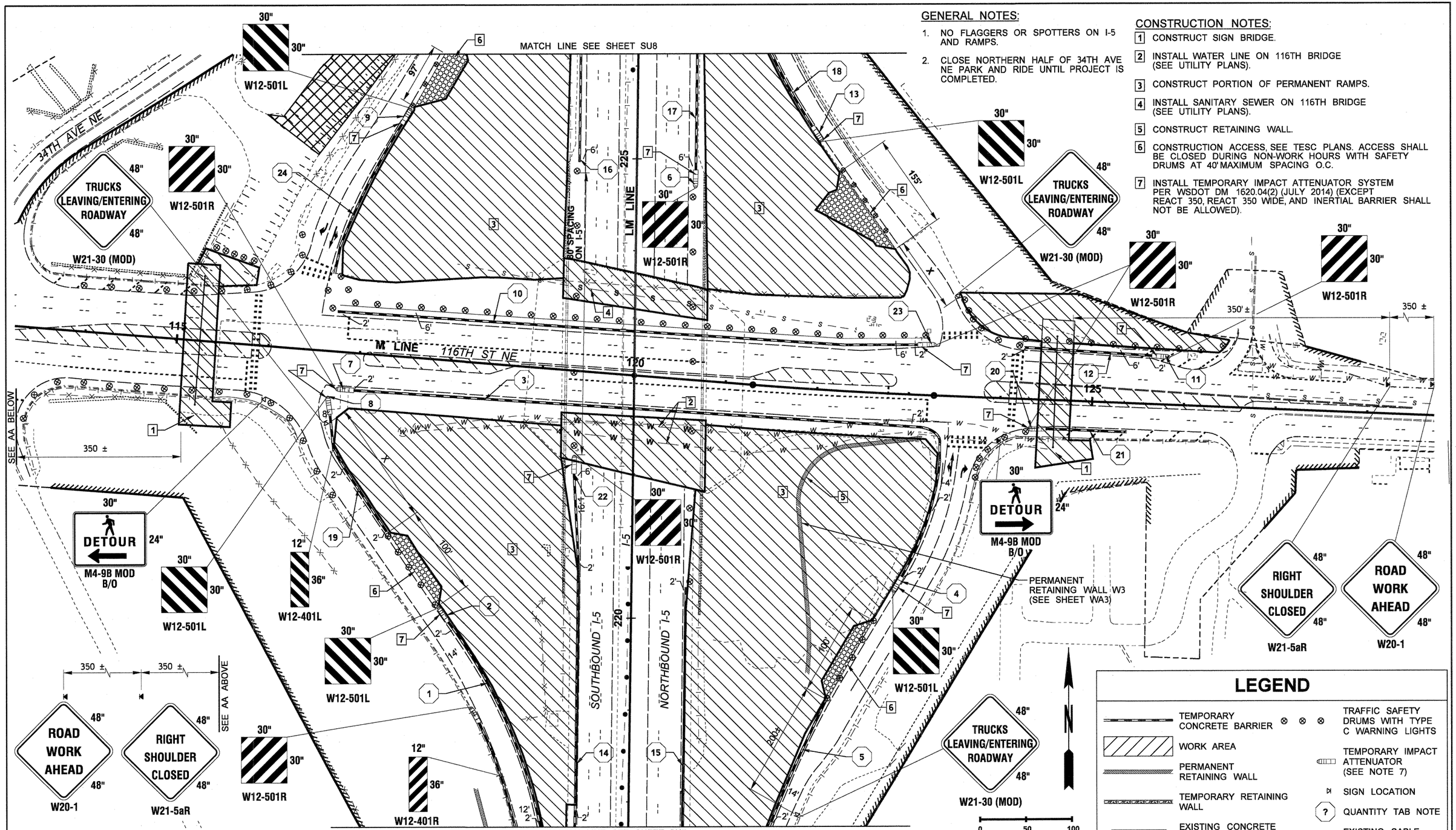

STAGE 1B

LEGEND

- TEMPORARY CONCRETE BARRIER
- WORK AREA
- PERMANENT RETAINING WALL
- TEMPORARY RETAINING WALL
- EXISTING CONCRETE BARRIER
- TRAFFIC SAFETY DRUMS WITH TYPE C WARNING LIGHTS
- TEMPORARY IMPACT ATTENUATOR (SEE NOTE 7)
- SIGN LOCATION
- QUANTITY TAB NOTE
- EXISTING CABLE BARRIER

FILE NAME	U:\PSO\Projects\Clients\1598-TulalipTribes\554-1598-095 116th-Ph4-PSE\99Svcs\CADD\DGN\PS&ESheets\BL1598033_PS_SU.dgn
TIME	4:43:21 PM
DATE	8/24/2017
PLOTTED BY	purgabut
DESIGNED BY	M. TSUN
ENTERED BY	B. PURGANAN
CHECKED BY	D. PROCTOR
APPROVED BY	H. LONGFELLOW

REVISION	DATE	BY

REGION NO.	STATE	FED.AID PROJ.NO.
10	WASH	
JOB NUMBER		
CONTRACT NO.		LOCATION NO.

P.E. STAMP BOX — DATE

HARRY DAVID LONGFELLOW — STATE OF WASHINGTON — 37902 — REGISTERED PROFESSIONAL ENGINEER — 8/24/17

P.E. STAMP BOX — DATE

TULALIP TRIBES — Parametrix

I-5 / 116TH STREET NE INTERCHANGE IMPROVEMENTS PHASE 4 RAMPS

STAGE CONSTRUCTION PLAN

Plot 6

PLAN REF NO SU6

SHEET 21 OF 238 SHEETS

CHANNELIZATION DEVICE SPACING (feet)		
MPH	TAPER	TANGENT
50/70	40	80
35/45	30	60
25/30	20	40

BUFFER DATA										
LONGITUDINAL BUFFER SPACE = B										
SPEED (MPH)	25	30	35	40	45	50	55	60	65	70
LENGTH (feet)	155	200	250	305	360	425	495	570	645	730

PROTECTIVE VEHICLE WITH TMA ROLL AHEAD DISTANCE = R		
TYPICAL PROTECTIVE VEHICLE TYPE WITH TMA	TYPICAL PROTECTIVE VEHICLE (WITH TMA) LOADED WEIGHT (LBS)	STATIONARY OPERATION (feet)
4 YARD DUMP TRUCK, SERVICE TRUCK, FLAT BED, ETC.	MINIMUM WEIGHT 15,000 LBS. (MAXIMUM WEIGHT SHALL BE IN ACCORDANCE WITH MANUFACTURER RECOMMENDATIONS)	30

ROLL AHEAD STOPPING SIGHT DISTANCE ASSUMES DRY PAVEMENT

* * A SECOND ATTENUATOR TRUCK SHALL BE USED TO PROTECT THE OPERATOR FOR REMOVAL AND PLACING OF RPM'S.

CONSTRUCTION NOTES:

1. CONSTRUCT SIGN BRIDGE.
2. INSTALL WATER LINE ON 116TH BRIDGE (SEE UTILITY PLANS).
3. CONSTRUCT PORTION OF PERMANENT RAMPS.
4. NOT USED.
5. NOT USED.
6. CONSTRUCTION ACCESS, SEE TESC PLANS. ACCESS SHALL BE CLOSED DURING NON-WORK HOURS WITH SAFETY DRUMS AT 40' MAXIMUM SPACING O.C.
7. INSTALL TEMPORARY IMPACT ATTENUATOR SYSTEM PER WSDOT DM 1620.04(2) (JULY 2014) (EXCEPT REACT 350, REACT 350 WIDE, AND INERTIAL BARRIER SHALL NOT BE ALLOWED).

GENERAL NOTES:

1. NO FLAGGERS OR SPOTTERS ON I-5 AND RAMPS.
2. CLOSE NORTHERN HALF OF 34TH AVE NE PARK AND RIDE UNTIL PROJECT IS COMPLETED.

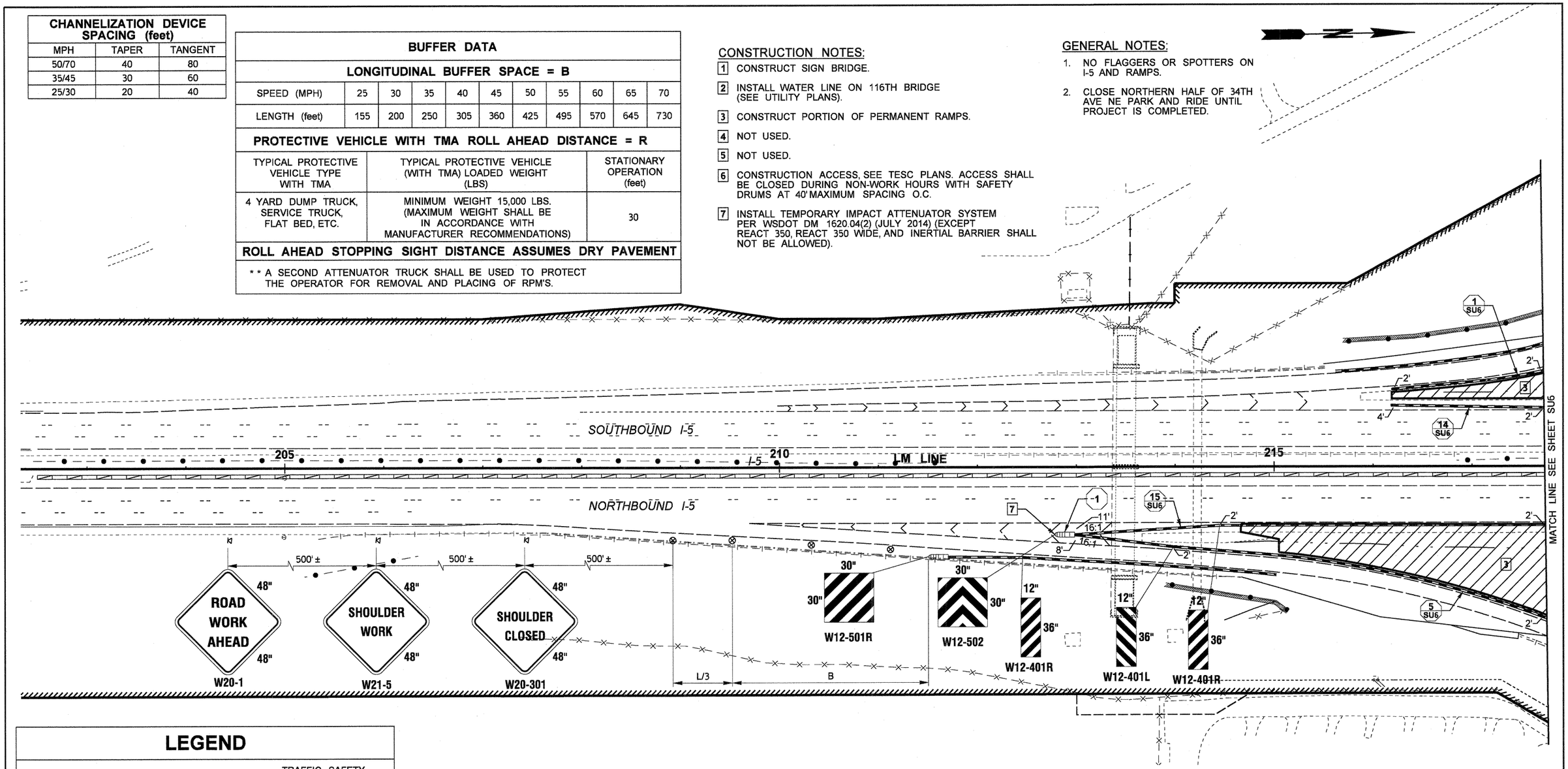

LEGEND

- TEMPORARY CONCRETE BARRIER
- WORK AREA
- PERMANENT RETAINING WALL
- TEMPORARY RETAINING WALL
- EXISTING CONCRETE BARRIER
- TRAFFIC SAFETY DRUMS WITH TYPE C WARNING LIGHTS
- TEMPORARY IMPACT ATTENUATOR (SEE NOTE 7)
- SIGN LOCATION
- QUANTITY TAB NOTE
- EXISTING CABLE BARRIER

SIGN SPACING = X		
FREEWAYS & EXPRESSWAYS	60 / 65 MPH	1500' ± (OR AS PER MUTCD)

(1) ALL SPACING MAY BE ADJUSTED TO ACCOMMODATE INTERCHANGE RAMPS, AT-GRADE INTERSECTIONS AND DRIVEWAYS.
(2) THIS SPACING MAY BE REDUCED IN URBAN AREAS TO FIT ROADWAY CONDITIONS.

STAGE 1B

0 50 100
SCALE IN FEET

MINIMUM TAPER LENGTH = L (feet)										
LANE WIDTH (feet)	Posted Speed (mph)									
	25	30	35	40	45	50	55	60	65	70
10	-	-	-	-	-	-	550	-	-	-
11	-	-	-	-	-	-	605	660	-	-
12	-	-	-	-	-	-	660	720	780	840

FILE NAME	U:\PSO\Projects\Clients\1598-TulalipTribes\554-1598-095 116th-Ph4-PSE\99Svcs\CADD\DGN\PS&ESheets\BL1598033_PS_SU.dgn
TIME	4:43:38 PM
DATE	8/24/2017
PLOTTED BY	purgabut
DESIGNED BY	M. TSUN
ENTERED BY	B. PURGANAN
CHECKED BY	D. PROCTOR
APPROVED BY	H. LONGFELLOW

REVISION	DATE	BY

REGION NO.	STATE	FED.AID PROJ.NO.
10	WASH	
JOB NUMBER		
CONTRACT NO.		LOCATION NO.

P.E. STAMP BOX DATE

HARRY DAVID LONGFELLOW STATE OF WASHINGTON 37902 REGISTERED PROFESSIONAL ENGINEER 8/24/17

P.E. STAMP BOX DATE

TULALIP TRIBES Parametrix

I-5 / 116TH STREET NE INTERCHANGE IMPROVEMENTS PHASE 4 RAMPS

STAGE CONSTRUCTION PLAN

Plot 7

PLAN REF NO SU7

SHEET 22 OF 238 SHEETS

CONSTRUCTION NOTES:

1. CONSTRUCT SIGN BRIDGE.
2. INSTALL WATER LINE ON 116TH BRIDGE (SEE UTILITY PLANS).
3. CONSTRUCT PORTION OF PERMANENT RAMPS.
4. NOT USED.
5. NOT USED.
6. CONSTRUCTION ACCESS, SEE TESC PLANS. ACCESS SHALL BE CLOSED DURING NON-WORK HOURS WITH SAFETY DRUMS AT 40' MAXIMUM SPACING O.C.
7. INSTALL TEMPORARY IMPACT ATTENUATOR SYSTEM PER WSDOT DM 1620.04(2) (JULY 2014) (EXCEPT REACT 350, REACT 350 WIDE, AND INERTIAL BARRIER SHALL NOT BE ALLOWED).

GENERAL NOTES:

1. NO FLAGGERS OR SPOTTERS ON I-5 AND RAMPS.
2. CLOSE NORTHERN HALF OF 34TH AVE NE PARK AND RIDE UNTIL PROJECT IS COMPLETED.

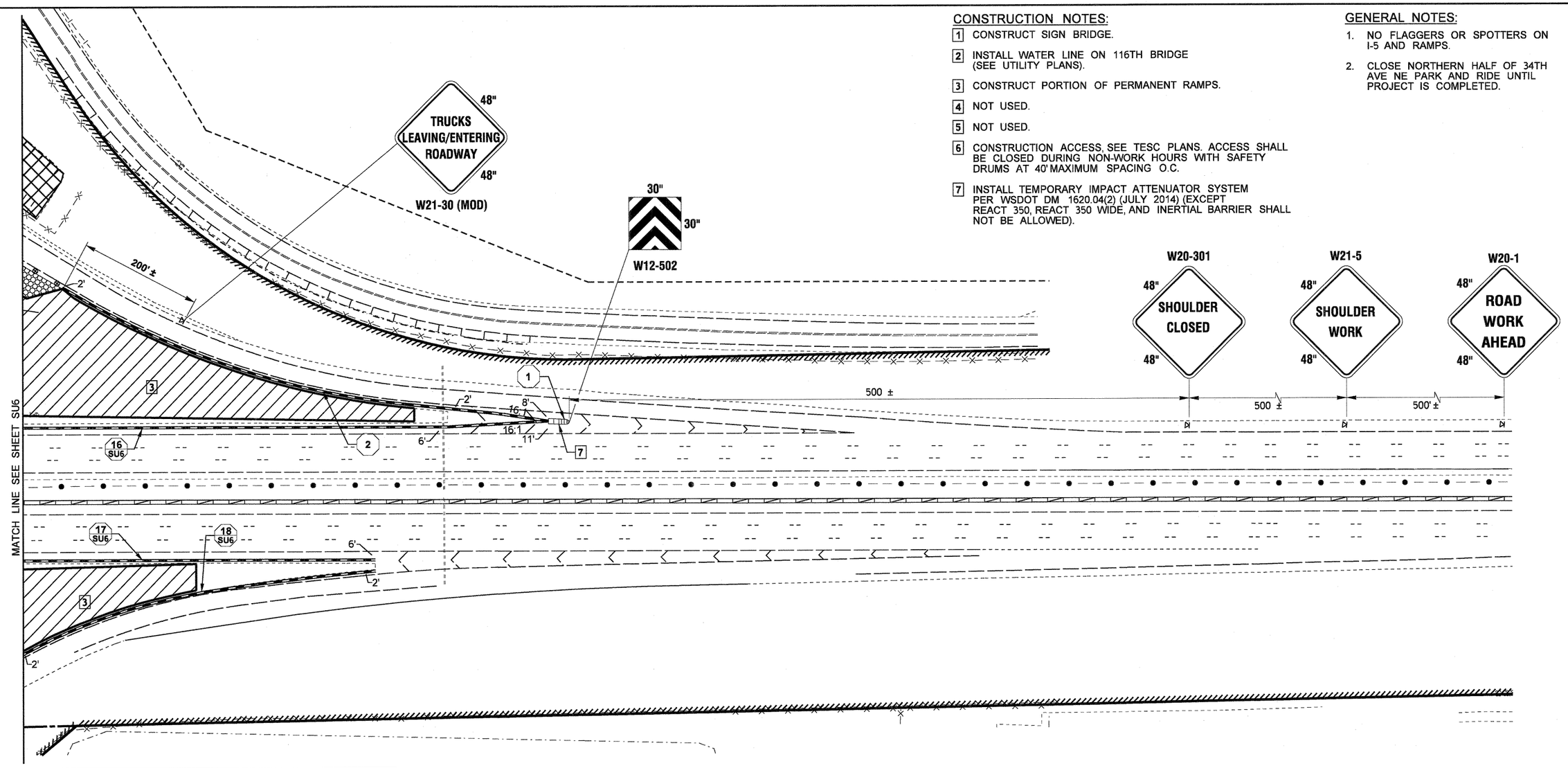

LEGEND

- TEMPORARY CONCRETE BARRIER
- WORK AREA
- PERMANENT RETAINING WALL
- TEMPORARY RETAINING WALL
- EXISTING CONCRETE BARRIER
- TRAFFIC SAFETY DRUMS WITH TYPE C WARNING LIGHTS
- TEMPORARY IMPACT ATTENUATOR (SEE NOTE 7)
- SIGN LOCATION
- QUANTITY TAB NOTE
- EXISTING CABLE BARRIER

STAGE 1B

0 50 100
SCALE IN FEET

FILE NAME	U:\PSO\Projects\Clients\1598-TulalipTribes\554-1598-095 116th-Ph4-PSE\99Svcs\CADD\DGN\PS&ESheets\BL1598033_PS_SU.dgn
TIME	4:43:53 PM
DATE	8/24/2017
PLOTTED BY	purgabut
DESIGNED BY	M. TSUN
ENTERED BY	B. PURGANAN
CHECKED BY	D. PROCTOR
APPROVED BY	H. LONGFELLOW

REVISION	DATE	BY

REGION NO.	STATE	FED.AID PROJ.NO.
10	WASH	
JOB NUMBER		
CONTRACT NO.		LOCATION NO.

P.E. STAMP BOX — DATE

HARRY DAVID LONGFELLOW — STATE OF WASHINGTON — 37902 — REGISTERED PROFESSIONAL ENGINEER

P.E. STAMP BOX — DATE

TULALIP TRIBES — Parametrix

I-5 / 116TH STREET NE
INTERCHANGE IMPROVEMENTS
PHASE 4 RAMPS

STAGE CONSTRUCTION PLAN

PLAN REF NO
SU8

SHEET 23 OF 238 SHEETS

CURVE DATA				
P.I. STATION	DELTA	RADIUS	TANGENT	LENGTH
A3T 403+38.49	7°12'45" LEFT	1014'	63.91'	127.65'
A3T 406+59.25	2°35'20" RIGHT	2000'	45.19'	90.36'
A3T 408+90.30	29°30'24" LEFT	266'	70.05'	135.48'
A3T 412+35.26	29°28'09" RIGHT	150'	39.45'	77.15'
B3T 502+67.33	5°37'12" RIGHT	1264'	62.04'	123.98'
B3T 508+69.04	21°07'53" RIGHT	612'	114.15'	225.71'
B3T 511+93.13	26°42'32" LEFT	300'	71.22'	139.85'
B3T 513+16.21	13°57'03" LEFT	445'	54.45'	108.35'
C3T 601+07.32	21°00'36" LEFT	400'	74.17'	146.68'
D3T 700+60.64	15°47'54" LEFT	300'	41.62'	82.72'
D3T 701+51.33	11°32'46" LEFT	300'	30.33'	60.46'

GENERAL NOTES:

1. NO FLAGGERS OR SPOTTERS ON I-5 AND RAMPS.
2. CLOSE NORTHERN HALF OF 34TH AVE NE PARK AND RIDE UNTIL PROJECT IS COMPLETED.
3. ALL PAVING TO FINISHED GRADE SHALL NOT PAVE THE FINAL 0.15' HMA LIFT UNTIL STAGE 4.

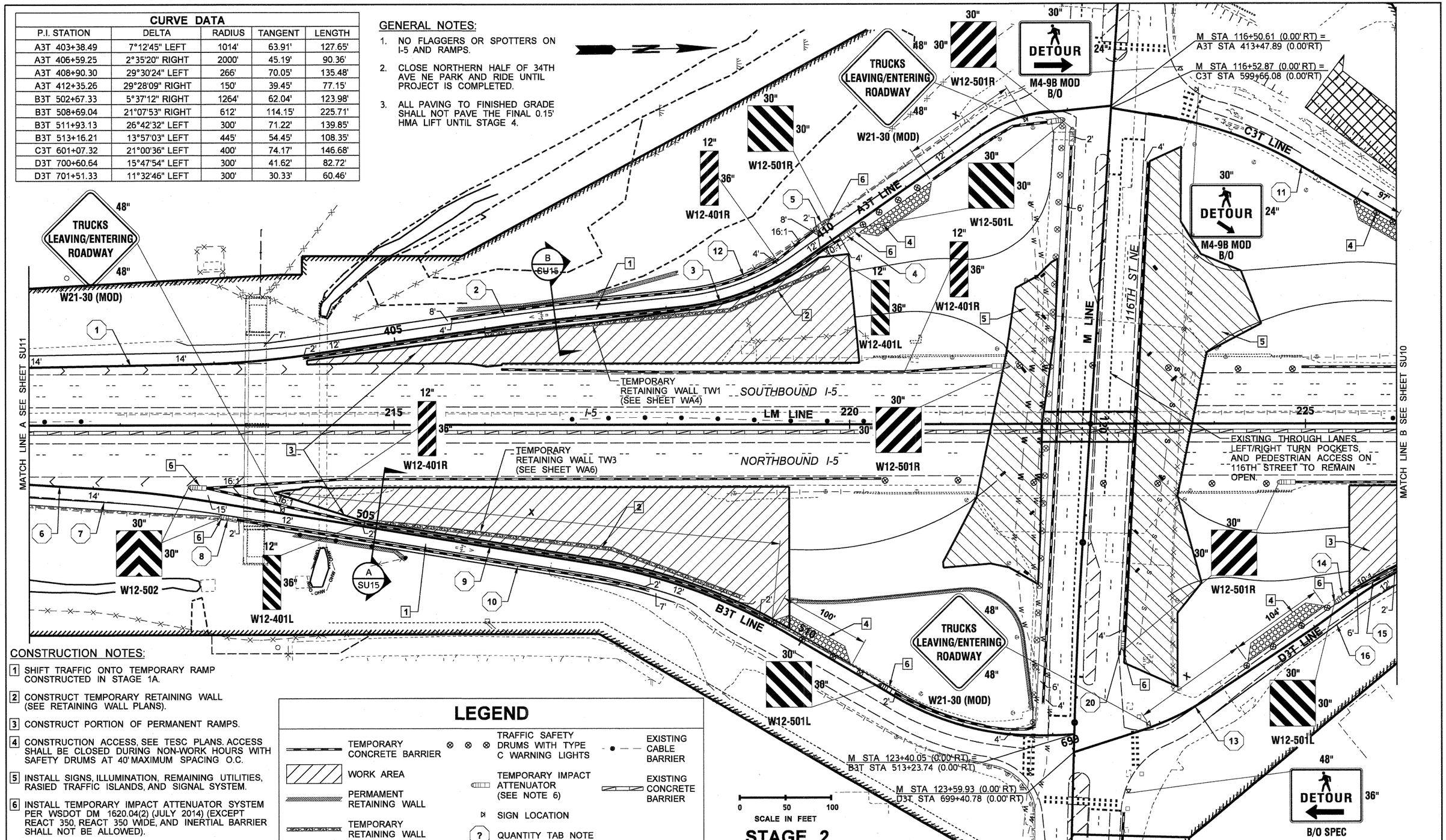

CONSTRUCTION NOTES:

1. SHIFT TRAFFIC ONTO TEMPORARY RAMP CONSTRUCTED IN STAGE 1A.
2. CONSTRUCT TEMPORARY RETAINING WALL (SEE RETAINING WALL PLANS).
3. CONSTRUCT PORTION OF PERMANENT RAMPS.
4. CONSTRUCTION ACCESS, SEE TESC PLANS. ACCESS SHALL BE CLOSED DURING NON-WORK HOURS WITH SAFETY DRUMS AT 40' MAXIMUM SPACING O.C.
5. INSTALL SIGNS, ILLUMINATION, REMAINING UTILITIES, RASIED TRAFFIC ISLANDS, AND SIGNAL SYSTEM.
6. INSTALL TEMPORARY IMPACT ATTENUATOR SYSTEM PER WSDOT DM 1620.04(2) (JULY 2014) (EXCEPT REACT 350, REACT 350 WIDE, AND INERTIAL BARRIER SHALL NOT BE ALLOWED).

LEGEND

- TEMPORARY CONCRETE BARRIER
- WORK AREA
- PERMAMENT RETAINING WALL
- TEMPORARY RETAINING WALL
- TRAFFIC SAFETY DRUMS WITH TYPE C WARNING LIGHTS
- TEMPORARY IMPACT ATTENUATOR (SEE NOTE 6)
- SIGN LOCATION
- ? QUANTITY TAB NOTE
- EXISTING CABLE BARRIER
- EXISTING CONCRETE BARRIER

FILE NAME	U:\PSO\Projects\Clients\1598-TulalipTribes\554-1598-095 116th-Ph4-PSE\99Svcs\CADD\DGN\PS&ESheets\BL1598033_PS_SU.dgn
TIME	4:44:09 PM
DATE	8/24/2017
PLOTTED BY	purgabut
DESIGNED BY	M. TSUN
ENTERED BY	B. PURGANAN
CHECKED BY	D. PROCTOR
APPROVED BY	H. LONGFELLOW

REVISION	DATE	BY

REGION NO.	STATE	FED.AID PROJ.NO.
10	WASH	
JOB NUMBER		
CONTRACT NO.		LOCATION NO.

P.E. STAMP BOX — DATE

HAPPY DAVID LONGFELLOW — STATE OF WASHINGTON — 37902 — REGISTERED PROFESSIONAL ENGINEER — P.E. STAMP BOX — DATE

TULALIP TRIBES — Parametrix

I-5 / 116TH STREET NE INTERCHANGE IMPROVEMENTS PHASE 4 RAMPS

STAGE CONSTRUCTION PLAN

Plot 8

PLAN REF NO SU9

SHEET 24 OF 238 SHEETS

CONSTRUCTION NOTES:

1. SHIFT TRAFFIC ONTO OUTER PORTION OF RAMP CONSTRUCTED IN STAGE 1A.
2. CONSTRUCT TEMPORARY RETAINING WALL (SEE RETAINING WALL PLANS).
3. CONSTRUCT PORTION OF PERMANENT RAMPS.
4. CONSTRUCTION ACCESS, SEE TESC PLANS. ACCESS SHALL BE CLOSED DURING NON-WORK HOURS WITH SAFETY DRUMS AT 40' MAXIMUM SPACING O.C.
5. INSTALL SIGNS, ILLUMINATION, REMAINING UTILITIES, RASIED TRAFFIC ISLANDS, AND SIGNAL SYSTEM.
6. INSTALL TEMPORARY IMPACT ATTENUATOR SYSTEM PER WSDOT DM 1620.04(2) (JULY 2014) (EXCEPT REACT 350, REACT 350 WIDE, AND INERTIAL BARRIER SHALL NOT BE ALLOWED).

CURVE DATA				
P.I. STATION	DELTA	RADIUS	TANGENT	LENGTH
C3T 604+45.60	18°02'15" LEFT	500'	79.36'	157.41'
C3T 607+64.34	8°18'46" LEFT	1000'	72.67'	145.09'
D3T 703+74.03	27°33'24" RIGHT	382'	93.68'	183.73'
D3T 703+99.51	27°29'20" RIGHT	437'	106.89'	209.66'
D3T 706+49.35	3°00'48" RIGHT	2466'	64.86'	129.69'
D3T 709+68.33	4°08'39" RIGHT	3012'	108.97'	217.85'

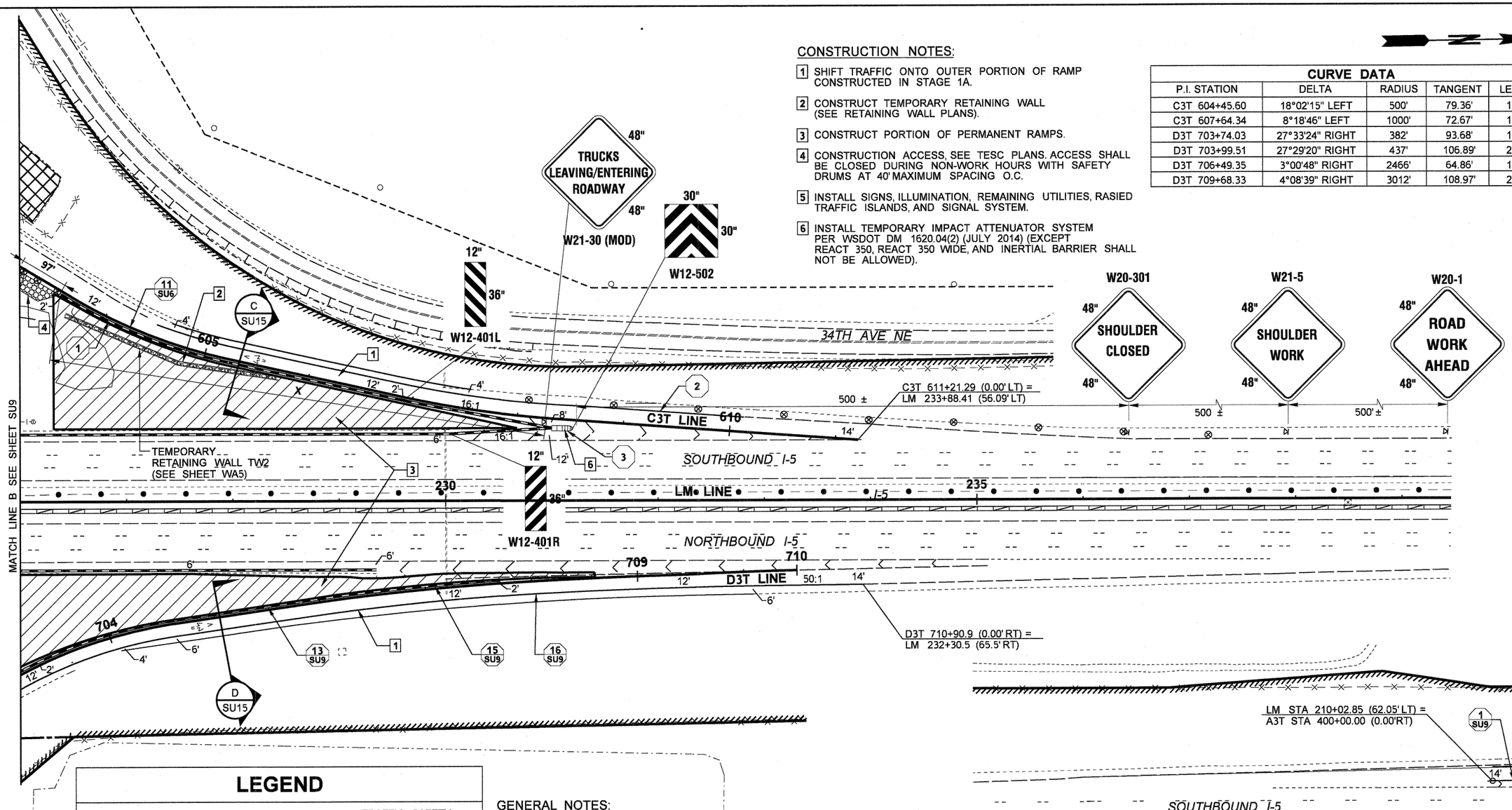

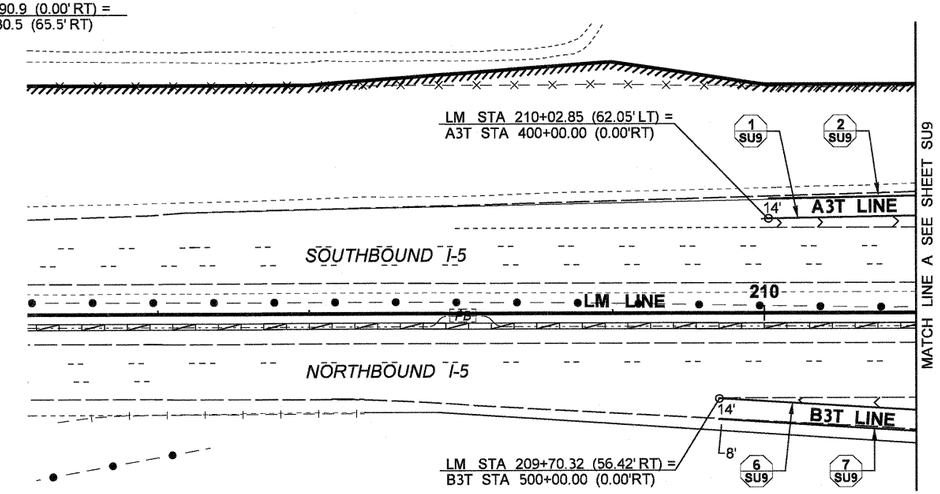

LEGEND

- TEMPORARY CONCRETE BARRIER
- WORK AREA
- PERMANENT RETAINING WALL
- TEMPORARY RETAINING WALL
- EXISTING CONCRETE BARRIER
- TRAFFIC SAFETY DRUMS WITH TYPE C WARNING LIGHTS
- TEMPORARY IMPACT ATTENUATOR (SEE NOTE 6)
- SIGN LOCATION
- QUANTITY TAB NOTE
- EXISTING CABLE BARRIER

GENERAL NOTES:

1. NO FLAGGERS OR SPOTTERS ON I-5 AND RAMPS.
2. CLOSE NORTHERN HALF OF 34TH AVE NE PARK AND RIDE UNTIL PROJECT IS COMPLETED.
3. ALL PAVING TO FINISHED GRADE SHALL NOT PAVE THE FINAL 0.15' HMA LIFT UNTIL STAGE 4.

STAGE 2

0 50 100
SCALE IN FEET

FILE NAME	U:\PSO\Projects\Clients\1598-TulalipTribes\554-1598-095 116th-Ph4-PSE\99Svcs\CADD\DGN\PS&ESheets\BL1598033_PS_SU.dgn
TIME	4:44:26 PM
DATE	8/24/2017
PLOTTED BY	purgabut
DESIGNED BY	M. TSUN
ENTERED BY	B. PURGANAN
CHECKED BY	D. PROCTOR
APPROVED BY	H. LONGFELLOW

REVISION | DATE | BY

REGION NO. 10 | STATE WASH | FED.AID PROJ.NO.
JOB NUMBER
CONTRACT NO. | LOCATION NO.

P.E. STAMP BOX — DATE

HENRY DAVID LONGFELLOW — STATE OF WASHINGTON — 37902 — REGISTERED PROFESSIONAL ENGINEER — DATE — P.E. STAMP BOX

TULALIP TRIBES — Parametrix

I-5 / 116TH STREET NE INTERCHANGE IMPROVEMENTS PHASE 4 RAMPS

STAGE CONSTRUCTION PLAN

Plot 9
PLAN REF NO SU10
SHEET 25 OF 238 SHEETS

BUFFER DATA										
LONGITUDINAL BUFFER SPACE = B										
SPEED (MPH)	25	30	35	40	45	50	55	60	65	70
LENGTH (feet)	155	200	250	305	360	425	495	570	645	730

PROTECTIVE VEHICLE WITH TMA ROLL AHEAD DISTANCE = R

TYPICAL PROTECTIVE VEHICLE TYPE WITH TMA	TYPICAL PROTECTIVE VEHICLE (WITH TMA) LOADED WEIGHT (LBS)	STATIONARY OPERATION (feet)
4 YARD DUMP TRUCK, SERVICE TRUCK, FLAT BED, ETC.	MINIMUM WEIGHT 15,000 LBS. (MAXIMUM WEIGHT SHALL BE IN ACCORDANCE WITH MANUFACTURER RECOMMENDATIONS)	30

ROLL AHEAD STOPPING SIGHT DISTANCE ASSUMES DRY PAVEMENT

* * A SECOND ATTENUATOR TRUCK SHALL BE USED TO PROTECT THE OPERATOR FOR REMOVAL AND PLACING OF RPM'S.

MINIMUM TAPER LENGTH = L (feet)

LANE WIDTH (feet)	Posted Speed (mph)									
	25	30	35	40	45	50	55	60	65	70
10	-	-	-	-	-	-	550	-	-	-
11	-	-	-	-	-	-	605	660	-	-
12	-	-	-	-	-	-	660	720	780	840

CHANNELIZATION DEVICE SPACING (feet)

MPH	TAPER	TANGENT
50/70	40	80
35/45	30	60
25/30	20	40

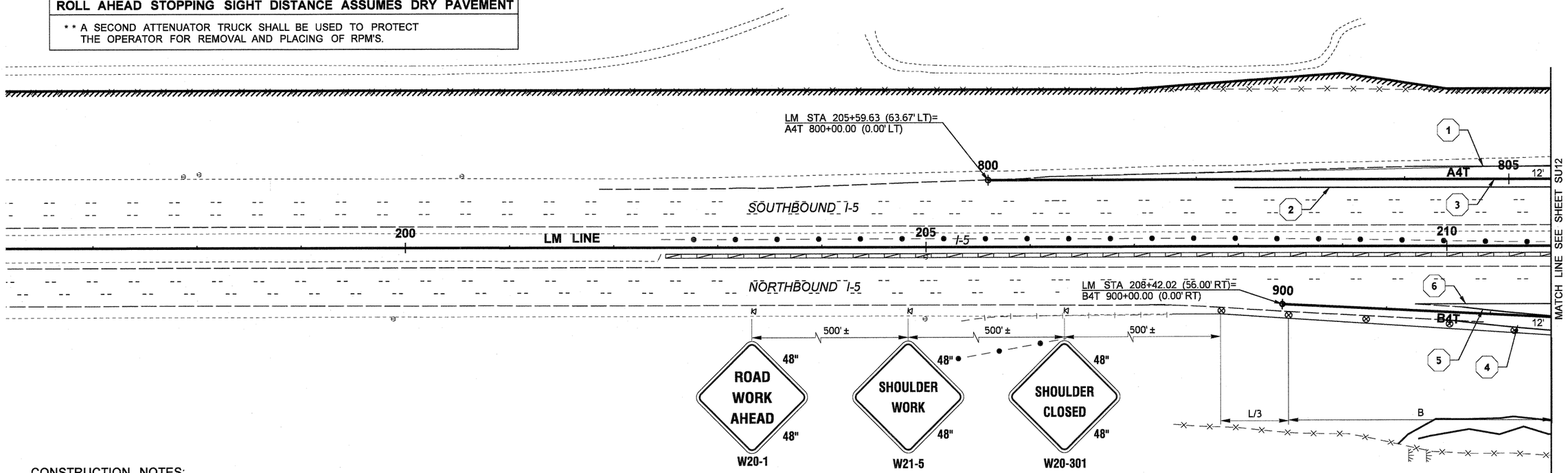

CONSTRUCTION NOTES:

1. PARTIALLY OPEN SPUI AND SHIFT TRAFFIC ONTO INNER PORTION OF RAMPS COMPLETED IN STAGE 3.
2. CONSTRUCT OUTER PORTION OF PERMANENT RAMPS.
3. REMOVE EXISTING RAMPS, TEMPORARY ILLUMINATION, AND ALL OTHER TEMPORARY ITEMS, AND CONSTRUCT STORMWATER PONDS.
4. CONSTRUCTION ACCESS, SEE TESC PLAN. ACCESS SHALL BE CLOSED DURING NON-WORK HOURS WITH SAFETY DRUMS AT 40' MAXIMUM SPACING O.C.
5. NOT USED.
6. INSTALL TEMPORARY IMPACT ATTENUATOR SYSTEM PER WSDOT DM 1620.04(2) (JULY 2014) (EXCEPT REACT 350, REACT 350 WIDE, AND INERTIAL BARRIER SHALL NOT BE ALLOWED).

GENERAL NOTES:

1. NO FLAGGERS OR SPOTTERS ON I-5 AND RAMPS.
2. CLOSE NORTHERN HALF OF 34TH AVE NE PARK AND RIDE UNTIL PROJECT IS COMPLETED.
3. ALL PAVING TO FINISHED GRADE SHALL NOT PAVE THE FINAL 0.15' HMA LIFT UNTIL STAGE 4.

STAGE 3

0 50 100
SCALE IN FEET

LEGEND

- TEMPORARY CONCRETE BARRIER
- WORK AREA
- PERMANENT RETAINING WALL
- TEMPORARY RETAINING WALL
- EXISTING CONCRETE BARRIER
- TRAFFIC SAFETY DRUMS WITH TYPE C WARNING LIGHTS
- TEMPORARY IMPACT ATTENUATOR (SEE NOTE 6)
- SIGN LOCATION
- QUANTITY TAB NOTE
- EXISTING CABLE BARRIER

FILE NAME	U:\PSO\Projects\Clients\1598-TulalipTribes\554-1598-095 116th-Ph4-PSE\99Svcs\CADD\DGN\PS&ESheets\BL1598033_PS_SU.dgn					
TIME	4:44:42 PM					
DATE	8/24/2017					
PLOTTED BY	purgabut					
DESIGNED BY	M. TSUN					
ENTERED BY	B. PURGANAN					
CHECKED BY	D. PROCTOR					
APPROVED BY	H. LONGFELLOW					
		REVISION	DATE	BY		

REGION NO.	STATE	FED.AID PROJ.NO.
10	WASH	
JOB NUMBER		
CONTRACT NO.		LOCATION NO.

P.E. STAMP BOX — DATE

HARRY DAVID LONGFELLOW, STATE OF WASHINGTON, 37902, REGISTERED PROFESSIONAL ENGINEER — DATE

P.E. STAMP BOX

TULALIP TRIBES — Parametrix

I-5 / 116TH STREET NE INTERCHANGE IMPROVEMENTS PHASE 4 RAMPS

STAGE CONSTRUCTION PLAN

Plot 11

PLAN REF NO SU11

SHEET 26 OF 238 SHEETS

CONSTRUCTION NOTES:

1. PARTIALLY OPEN SPUI AND SHIFT TRAFFIC ONTO INNER PORTION OF RAMPS COMPLETED IN STAGE 3.
2. CONSTRUCT OUTER PORTION OF PERMANENT RAMPS.
3. REMOVE EXISTING RAMPS, TEMPORARY ILLUMINATION, AND ALL OTHER TEMPORARY ITEMS, AND CONSTRUCT STORMWATER PONDS.
4. CONSTRUCTION ACCESS, SEE TESC PLAN. ACCESS SHALL BE CLOSED DURING NON-WORK HOURS WITH SAFETY DRUMS AT 40' MAXIMUM SPACING O.C.
5. NOT USED.
6. INSTALL TEMPORARY IMPACT ATTENUATOR SYSTEM PER WSDOT DM 1620.04(2) (JULY 2014) (EXCEPT REACT 350, REACT 350 WIDE, AND INERTIAL BARRIER SHALL NOT BE ALLOWED).

CURVE DATA

P.I. STATION	DELTA	RADIUS	TANGENT	LENGTH
A4T 808+74.02	5°38'57.4" LEFT	2012'	99.27'	198.38'
A4T 816+27.59	1°07'26.8" RIGHT	3000'	29.43'	58.86'
B4T 903+60.30	2°17'27.8" LEFT	2000'	39.99'	79.97'
B4T 905+61.67	6°9'02.0" RIGHT	3004'	161.39'	322.47'
B4T 912+87.90	64°01'03.2" LEFT	334'	208.78'	373.18'
C4T 1001+84.79	60°00'32.0" RIGHT	320'	184.79'	335.15'
D4T 1101+26.27	62°02'13.7" LEFT	210'	126.27'	227.38'

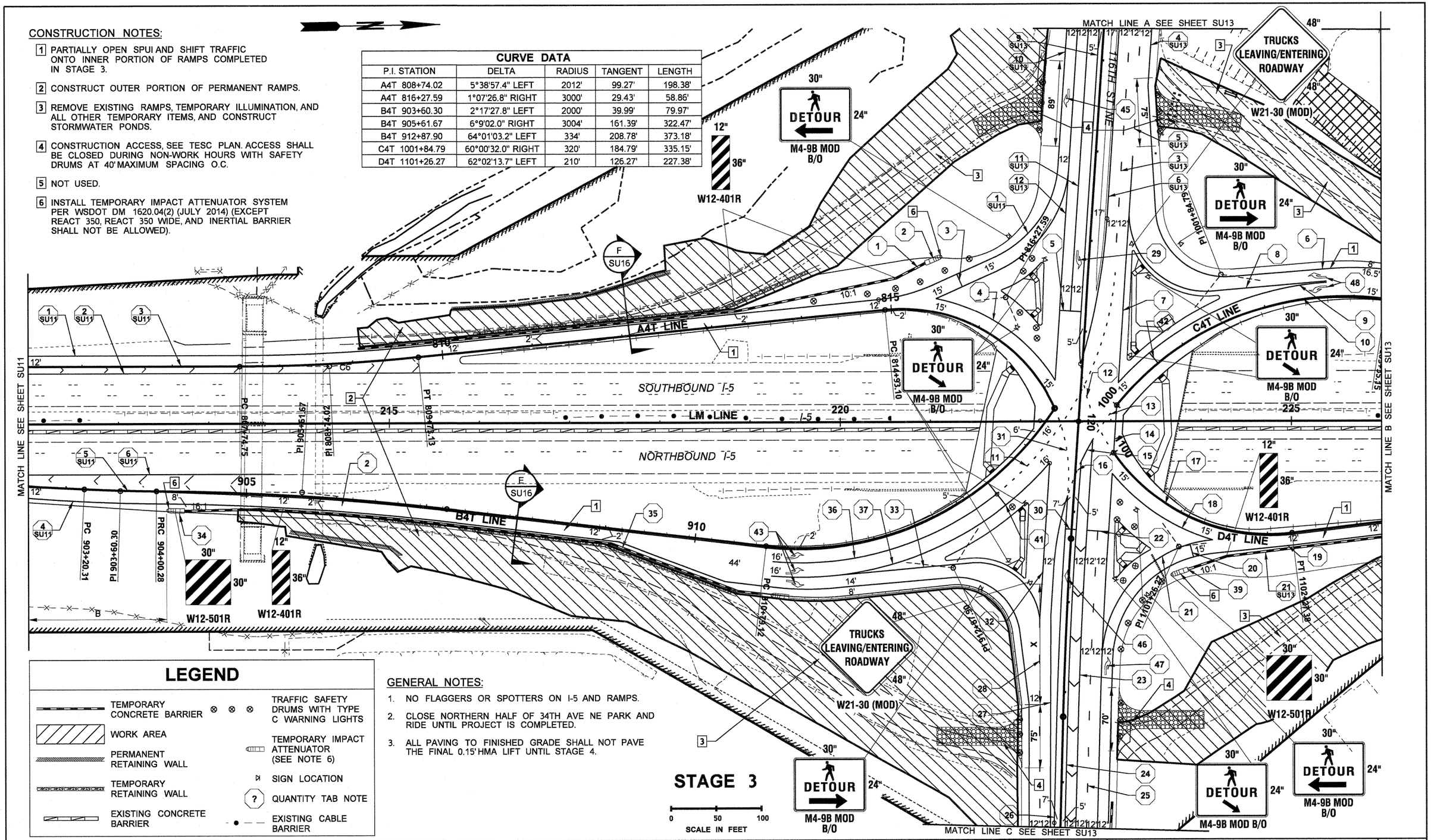

LEGEND

- TEMPORARY CONCRETE BARRIER
- WORK AREA
- PERMANENT RETAINING WALL
- TEMPORARY RETAINING WALL
- EXISTING CONCRETE BARRIER
- TRAFFIC SAFETY DRUMS WITH TYPE C WARNING LIGHTS
- TEMPORARY IMPACT ATTENUATOR (SEE NOTE 6)
- SIGN LOCATION
- QUANTITY TAB NOTE
- EXISTING CABLE BARRIER

GENERAL NOTES:

1. NO FLAGGERS OR SPOTTERS ON I-5 AND RAMPS.
2. CLOSE NORTHERN HALF OF 34TH AVE NE PARK AND RIDE UNTIL PROJECT IS COMPLETED.
3. ALL PAVING TO FINISHED GRADE SHALL NOT PAVE THE FINAL 0.15' HMA LIFT UNTIL STAGE 4.

STAGE 3

FILE NAME	U:\PSO\Projects\Clients\1598-TulalipTribes\554-1598-095 116th-Ph4-PSE\99Svcs\CADD\DGN\PS&ESheets\BL1598033_PS_SU.dgn
TIME	4:44:56 PM
DATE	8/24/2017
PLOTTED BY	purgabut
DESIGNED BY	M. TSUN
ENTERED BY	B. PURGANAN
APPROVED BY	D. PROCTOR
PROJ. ENGR.	H. LONGFELLOW

REVISION | DATE | BY

REGION NO. 10 | STATE WASH | FED.AID PROJ.NO.

JOB NUMBER

CONTRACT NO. | LOCATION NO.

P.E. STAMP BOX — DATE

HARRY DAVID LONGFELLOW — STATE OF WASHINGTON — 37302 — REGISTERED PROFESSIONAL ENGINEER — P.E. STAMP BOX — DATE

TULALIP TRIBES — Parametrix

I-5 / 116TH STREET NE INTERCHANGE IMPROVEMENTS PHASE 4 RAMPS

STAGE CONSTRUCTION PLAN

Plot 12

PLAN REF NO SU12

SHEET 27 OF 238 SHEETS

CURVE DATA				
P.I. STATION	DELTA	RADIUS	TANGENT	LENGTH
C4T 1006+56.32	6°00'18.3" LEFT	1800'	94.41'	188.66'
D4T 1107+22.86	7°48'59.8" RIGHT	3004'	205.23'	409.82'
D4T 1109+82.22	2°05'29.6" LEFT	3000'	54.76'	109.51'

GENERAL NOTES:

1. NO FLAGGERS OR SPOTTERS ON I-5 AND RAMPS.
2. CLOSE NORTHERN HALF OF 34TH AVE NE PARK AND RIDE UNTIL PROJECT IS COMPLETED.
3. ALL PAVING TO FINISHED GRADE SHALL NOT PAVE THE FINAL 0.15' HMA LIFT UNTIL STAGE 4.

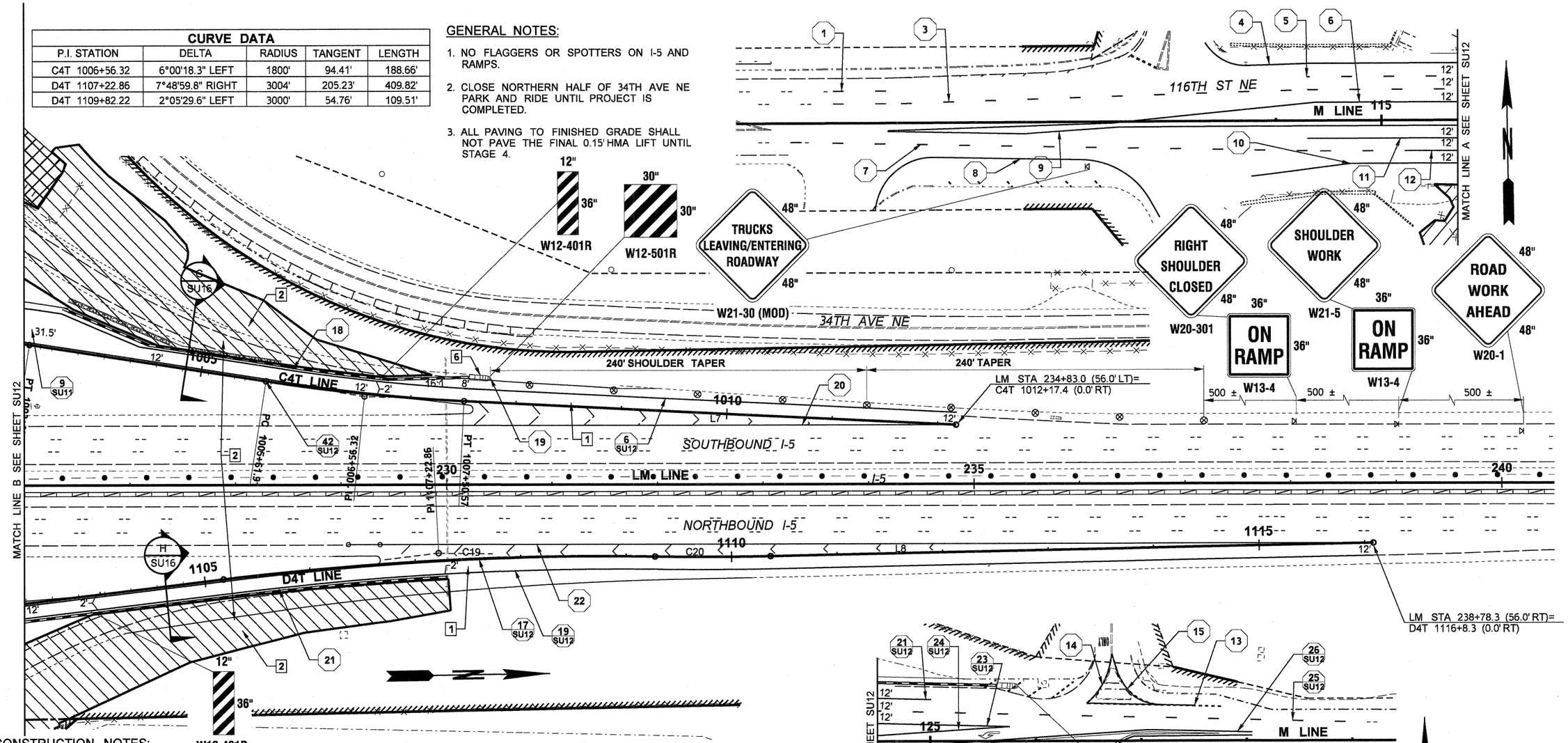

CONSTRUCTION NOTES:

1. PARTIALLY OPEN SPUI AND SHIFT TRAFFIC ONTO INNER PORTION OF RAMPS COMPLETED IN STAGE 3.
2. CONSTRUCT OUTER PORTION OF PERMANENT RAMPS.
3. REMOVE EXISTING RAMPS, TEMPORARY ILLUMINATION, AND ALL OTHER TEMPORARY ITEMS, AND CONSTRUCT STORMWATER PONDS.
4. CONSTRUCTION ACCESS, SEE TESC PLAN. ACCESS SHALL BE CLOSED DURING NON-WORK HOURS WITH SAFETY DRUMS AT 40' MAXIMUM SPACING O.C.
5. NOT USED.
6. INSTALL TEMPORARY IMPACT ATTENUATOR SYSTEM PER WSDOT DM 1620.04(2) (JULY 2014) (EXCEPT REACT 350, REACT 350 WIDE, AND INERTIAL BARRIER SHALL NOT BE ALLOWED).

LEGEND

- TEMPORARY CONCRETE BARRIER
- WORK AREA
- PERMANENT RETAINING WALL
- TEMPORARY RETAINING WALL
- EXISTING CONCRETE BARRIER
- TRAFFIC SAFETY DRUMS WITH TYPE C WARNING LIGHTS
- TEMPORARY IMPACT ATTENUATOR (SEE NOTE 6)
- SIGN LOCATION
- QUANTITY TAB NOTE
- EXISTING CABLE BARRIER

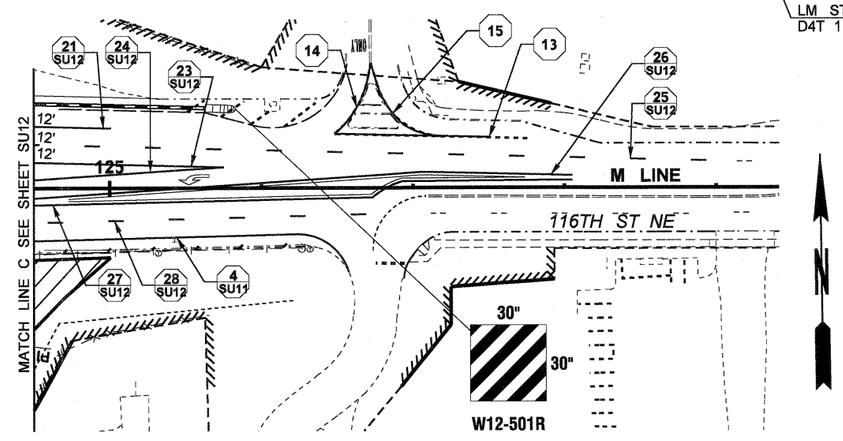

STAGE 3

0 50 100
SCALE IN FEET

FILE NAME	U:\PSO\Projects\Clients\1598-TulalipTribes\554-1598-095 116th-Ph4-PSE\99Svcs\CADD\DGN\PS&ESheets\BL1598033_PS_SU.dgn
TIME	4:45:12 PM
DATE	8/24/2017
PLOTTED BY	purgabut
DESIGNED BY	M. TSUN
ENTERED BY	B. PURGANAN
CHECKED BY	D. PROCTOR
APPROVED BY	H. LONGFELLOW

REVISION	DATE	BY

REGION NO.	STATE	FED.AID PROJ.NO.
10	WASH	
JOB NUMBER		
CONTRACT NO.		LOCATION NO.

P.E. STAMP BOX DATE

P.E. STAMP BOX DATE

Parametrix

I-5 / 116TH STREET NE INTERCHANGE IMPROVEMENTS PHASE 4 RAMPS

STAGE CONSTRUCTION PLAN

Plot 13

PLAN REF NO SU13

SHEET 28 OF 238 SHEETS

LEGEND

- TEMPORARY CONCRETE BARRIER
- WORK AREA
- PERMANENT RETAINING WALL
- TEMPORARY RETAINING WALL
- EXISTING CONCRETE BARRIER
- TRAFFIC SAFETY DRUMS WITH TYPE C WARNING LIGHTS
- TEMPORARY IMPACT ATTENUATOR
- SIGN LOCATION
- QUANTITY TAB NOTE
- EXISTING CABLE BARRIER

CONSTRUCTION NOTES:

1. FINAL RAISED RAISED MEDIAN SECTION, AND STRIPING.
2. NORTH HALF 116TH FINAL PLANING, PAVING (0.15' HMA), AND STRIPING.
3. NORTH RAMPS FINAL PLANING, PAVING (0.15' HMA), AND STRIPING.
4. SOUTH HALF 116TH FINAL PLANING, PAVING (0.15' HMA), FINAL RAISED MEDIAN SECTION, AND STRIPING.
5. SOUTH RAMPS FINAL PLANING, PAVING (0.15' HMA), AND STRIPING.

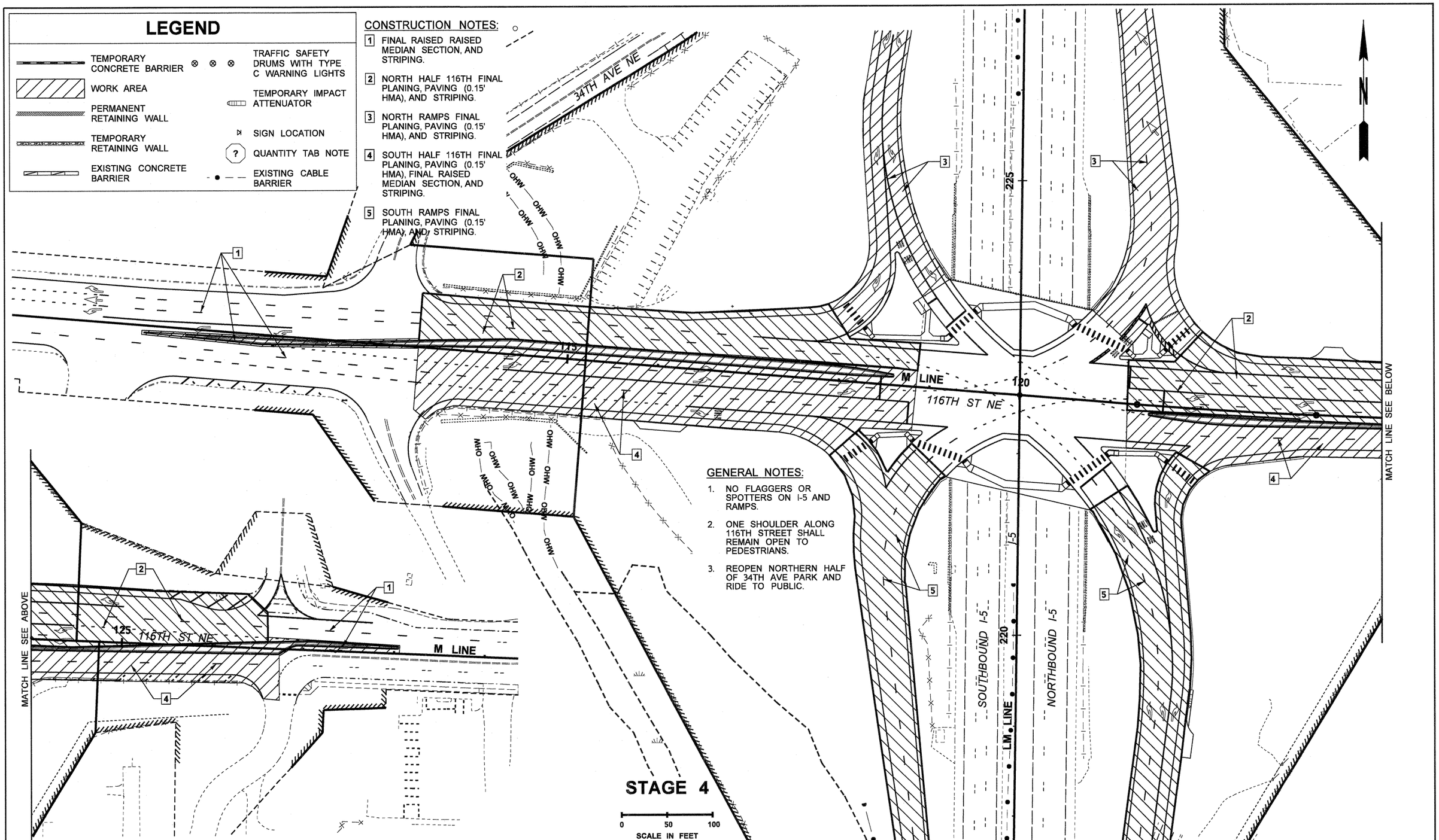

GENERAL NOTES:

1. NO FLAGGERS OR SPOTTERS ON I-5 AND RAMPS.
2. ONE SHOULDER ALONG 116TH STREET SHALL REMAIN OPEN TO PEDESTRIANS.
3. REOPEN NORTHERN HALF OF 34TH AVE PARK AND RIDE TO PUBLIC.

STAGE 4

0 50 100
SCALE IN FEET

FILE NAME	U:\PSO\Projects\Clients\1598-TulalipTribes\554-1598-095 116th-Ph4-PSE\99Svcs\CADD\DGN\PS&ESheets\BL1598033_PS_SU.dgn
TIME	4:45:27 PM
DATE	8/24/2017
PLOTTED BY	purgabut
DESIGNED BY	M. TSUN
ENTERED BY	B. PURGANAN
CHECKED BY	D. PROCTOR
APPROVED BY	H. LONGFELLOW

REVISION	DATE	BY

REGION NO.	STATE	FED.AID PROJ.NO.
10	WASH	
JOB NUMBER		
CONTRACT NO.		LOCATION NO.

P.E. STAMP BOX — DATE

HARRY DAVID LONGFELLOW — STATE OF WASHINGTON — 37902 — REGISTERED PROFESSIONAL ENGINEER

P.E. STAMP BOX — DATE

TULALIP TRIBES — Parametrix

I-5 / 116TH STREET NE INTERCHANGE IMPROVEMENTS PHASE 4 RAMPS

STAGE CONSTRUCTION PLAN

Plot 14

PLAN REF NO SU14

SHEET 29 OF 238 SHEETS

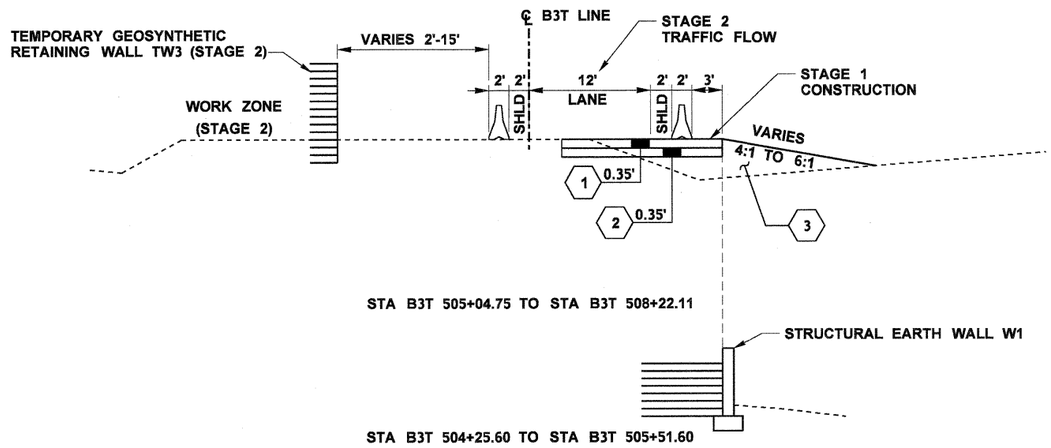

TEMPORARY ROADWAY SECTION A

I-5 NB OFF-RAMP: STAGE 2
NOT TO SCALE

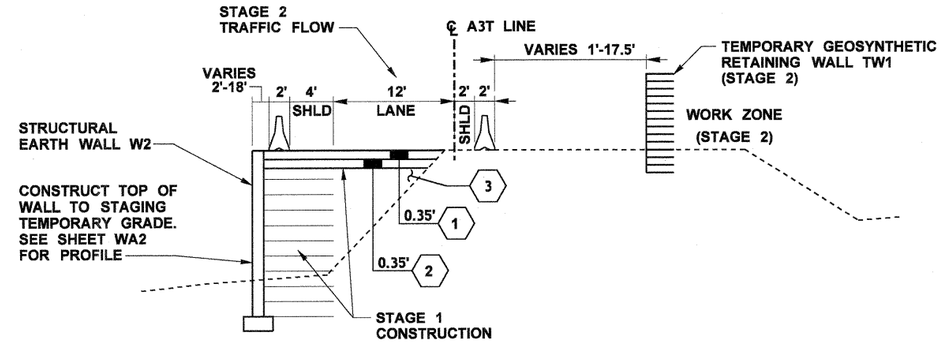

TEMPORARY ROADWAY SECTION B

I-5 SB ON-RAMP: STAGE 2
STA A3T 405+72 TO STA A3T 409+80
NOT TO SCALE

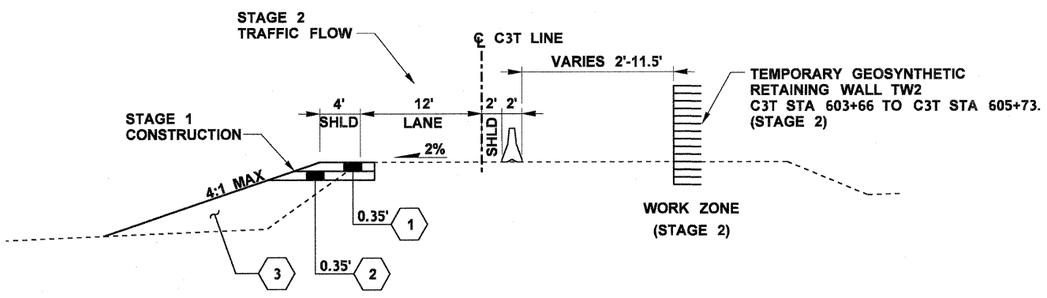

TEMPORARY ROADWAY SECTION C

I-5 SB OFF RAMP: STAGE 2
C3T STA 604+88 TO C3T STA 607+28
NOT TO SCALE

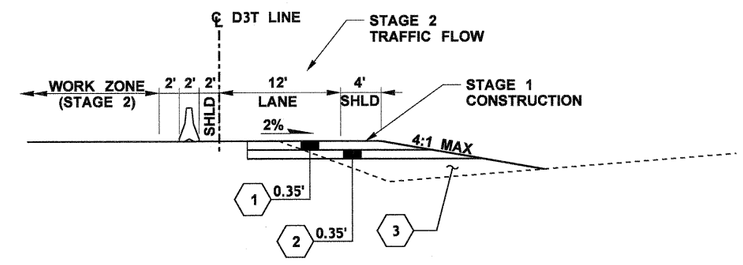

TEMPORARY ROADWAY SECTION D

I-5 NB ON-RAMP: STAGE 2
STA D3T 703+88 TO STA D3T 709+07
NOT TO SCALE

LEGEND

1. HMA CL. 1/2 IN. PG 64-22.
2. CRUSHED SURFACE BASE COURSE
3. GRAVEL BORROW INCL. HAUL

GENERAL NOTES:

1. SEE SHEET WA1-WA6 FOR RETAINING WALLS.

FILE NAME	U:\PSO\Projects\Clients\1598-TulalipTribes\554-1598-095 116th-Ph4-PSE\99Svcs\CADD\DGN\PS&ESheets\BL1598033_PS_SU.dgn					
TIME	4:45:41 PM					
DATE	8/24/2017					
PLOTTED BY	purgabut					
DESIGNED BY	M. TSUN					
ENTERED BY	B. PURGANAN					
CHECKED BY	D. PROCTOR					
APPROVED BY	H. LONGFELLOW					
		REVISION	DATE	BY		

REGION NO.	STATE	FED.AID PROJ.NO.
10	WASH	
JOB NUMBER		
CONTRACT NO.		LOCATION NO.

DATE
P.E. STAMP BOX

HARRY DAVID LONGFELLOW — STATE OF WASHINGTON — 37902 — REGISTERED PROFESSIONAL ENGINEER

DATE
P.E. STAMP BOX

TULALIP TRIBES
Parametrix

I-5 / 116TH STREET NE
INTERCHANGE IMPROVEMENTS
PHASE 4 RAMPS

STAGE CONSTRUCTION PLAN

Plot 16
PLAN REF NO
SU15
SHEET 30 OF 238 SHEETS

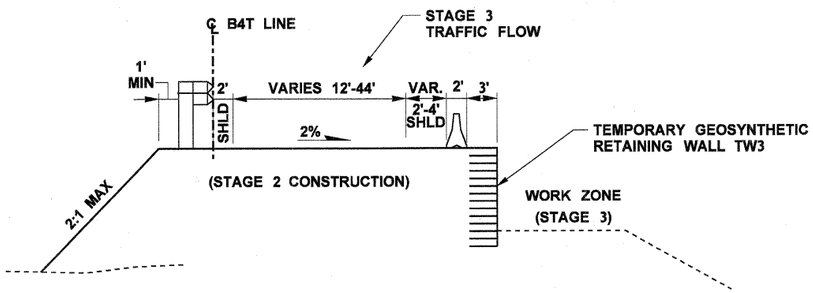

TEMPORARY ROADWAY SECTION E

I-5 NB OFF-RAMP: STAGE 3
STA B4T 906+33 TO STA B4T STA 910+53
NOT TO SCALE

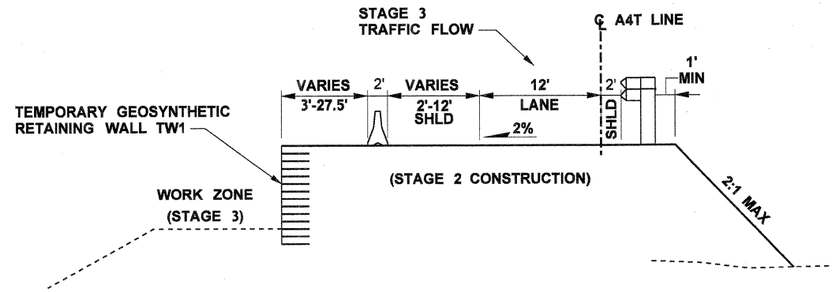

TEMPORARY ROADWAY SECTION F

I-5 SB ON-RAMP: STAGE 3
STA A4T 810+36 TO STA A4T STA 814+26
NOT TO SCALE

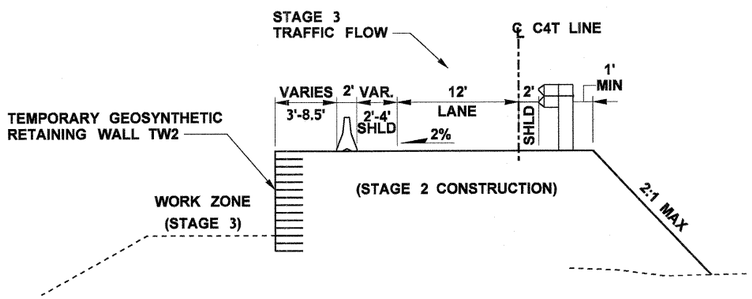

TEMPORARY ROADWAY SECTION G

I-5 SB OFF-RAMP: STAGE 3
STA C4T 1003+65 TO STA C4T STA 1005+74
NOT TO SCALE

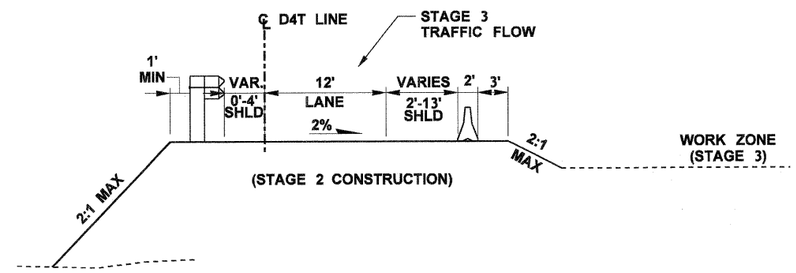

TEMPORARY ROADWAY SECTION H

I-5 NB ON-RAMP: STAGE 3
STA D4T 1103+35 TO STA D4T 1107+30
NOT TO SCALE

GENERAL NOTES:

1. SEE SHEET WA1-WA6 FOR RETAINING WALLS.

FILE NAME	U:\PSO\Projects\Clients\1598-TulalipTribes\554-1598-095 116th-Ph4-PSE\99Svcs\CADD\DGN\PS&ESheets\BL1598033_PS_SU.dgn						
TIME	4:45:53 PM				REGION NO.	STATE	FED.AID PROJ.NO.
DATE	8/24/2017				10	WASH	
PLOTTED BY	purgabut				JOB NUMBER		
DESIGNED BY	M. TSUN						
ENTERED BY	B. PURGANAN				CONTRACT NO.		LOCATION NO.
CHECKED BY	D. PROCTOR						
APPROVED BY	H. LONGFELLOW						
		REVISION	DATE	BY			

P.E. STAMP BOX — DATE

P.E. STAMP BOX — DATE

TULALIP TRIBES — Parametrix

I-5 / 116TH STREET NE
INTERCHANGE IMPROVEMENTS
PHASE 4 RAMPS

STAGE CONSTRUCTION PLAN

Plot 17
PLAN REF NO
SU16
SHEET 31 OF 238 SHEETS

CURVE DATA				
P.I. STATION	DELTA	RADIUS	TANGENT	LENGTH
ES 115+35.61	4°40'27"LT	3000.00'	122.44'	244.68'
SW 114+63.05	3°51'34"RT	3000.00'	101.08'	202.08'

ALIGNMENT COORDINATES		
STATION	NORTHING	EASTING
ES 112+62.31	731298.36	1638271.55
SW 111+58.85	731192.77	1638409.40
LM 206+19.02	730654.10	1638329.25

T. 30N. R. 5E. W.M.

NOTE:

1. PER RCW 58.09.130, ANY MONUMENT OR CORNER DISTURBED BY THE CONTRACTOR'S OPERATION SHALL BE REPLACED AT NO COST TO THE CONTRACTING AGENCY.

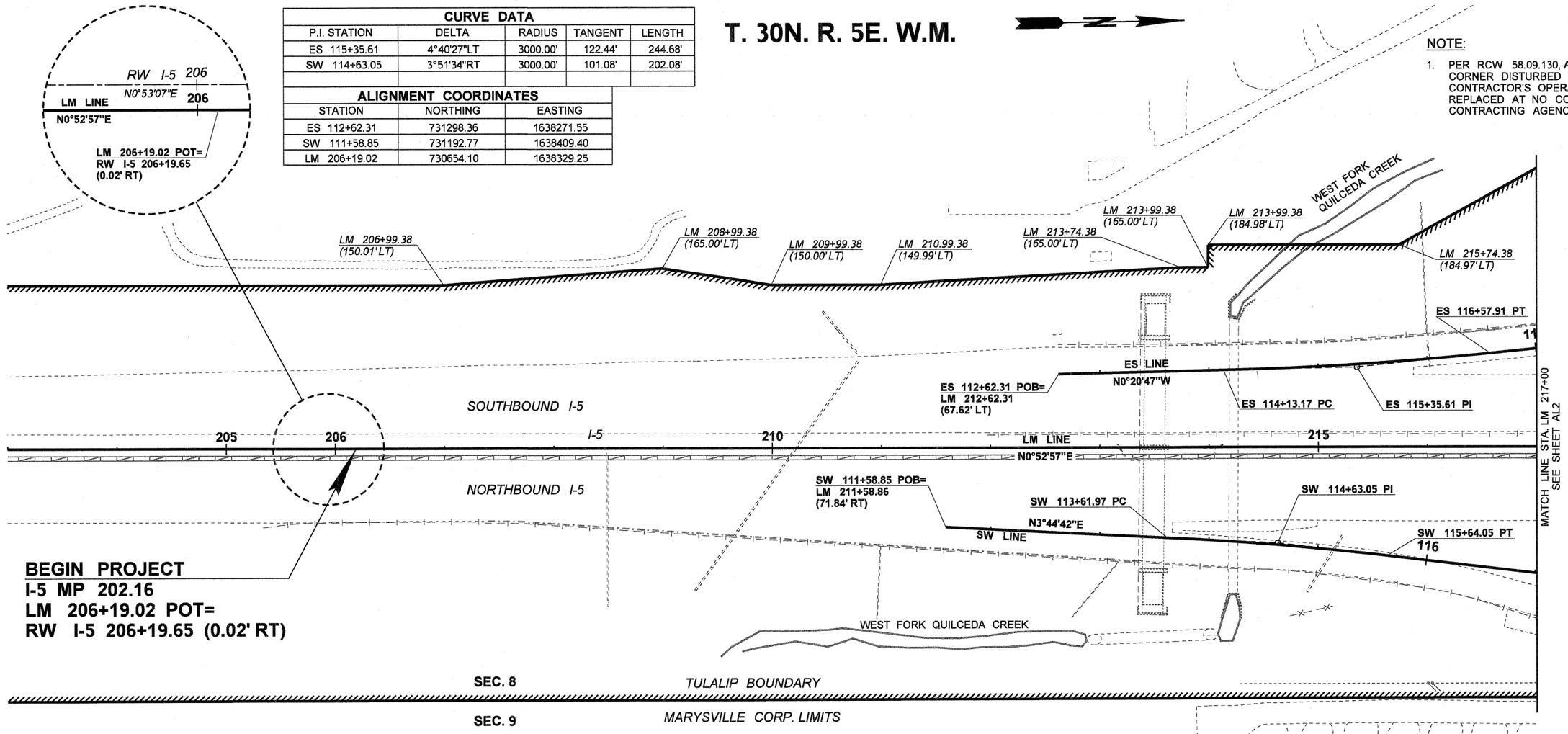

LEGEND

- EXISTING ALIGNMENT
- CONSTRUCTION ALIGNMENT
- TEMPORARY CONSTRUCTION EASEMENT
- WSDOT RIGHT OF WAY
- LIMITED ACCESS RIGHT OF WAY
- TRIBE/COUNTY/CITY RIGHT OF WAY
- SIXTEENTH SECTION LINE
- QUARTER SECTION LINE
- SECTION LINE
- FOUND QUARTER CORNER
- NOT FOUND SECTION CORNER

0 50 100
SCALE IN FEET

THE BASIS OF BEARINGS AND DISTANCES ARE DETERMINED FROM WASHINGTON STATE PLANE COORDINATE SYSTEM NORTH ZONE, NAD 83(91).

THE DISTANCES SHOWN ARE GROUND DIMENSIONS. THE COMBINED SCALE FACTOR IS 0.99993730.

FILE NAME	U:\PSO\Projects\Clients\1598-TulalipTribes\554-1598-095 116th-Ph4-PSE\99Svcs\CADD\DGN\PS&ESheets\BL1598033_PS_ALRW.dgn
TIME	4:49:22 PM
DATE	8/24/2017
PLOTTED BY	purgabut
DESIGNED BY	M. TSUN
ENTERED BY	B. PURGANAN
CHECKED BY	D. PROCTOR
APPROVED BY	H. LONGFELLOW

REVISION	DATE	BY

REGION NO.	STATE	FED.AID PROJ.NO.
10	WASH	
JOB NUMBER		
CONTRACT NO.		LOCATION NO.

P.E. STAMP BOX — DATE

P.E. STAMP BOX — DATE

TULALIP TRIBES
Parametrix

I-5 / 116TH STREET NE
INTERCHANGE IMPROVEMENTS
PHASE 4 RAMPS

ALIGNMENT / RIGHT OF WAY PLAN

Plot 2
PLAN REF NO
AL1
SHEET 32 OF 238 SHEETS

T. 30N. R. 5E. W.M.

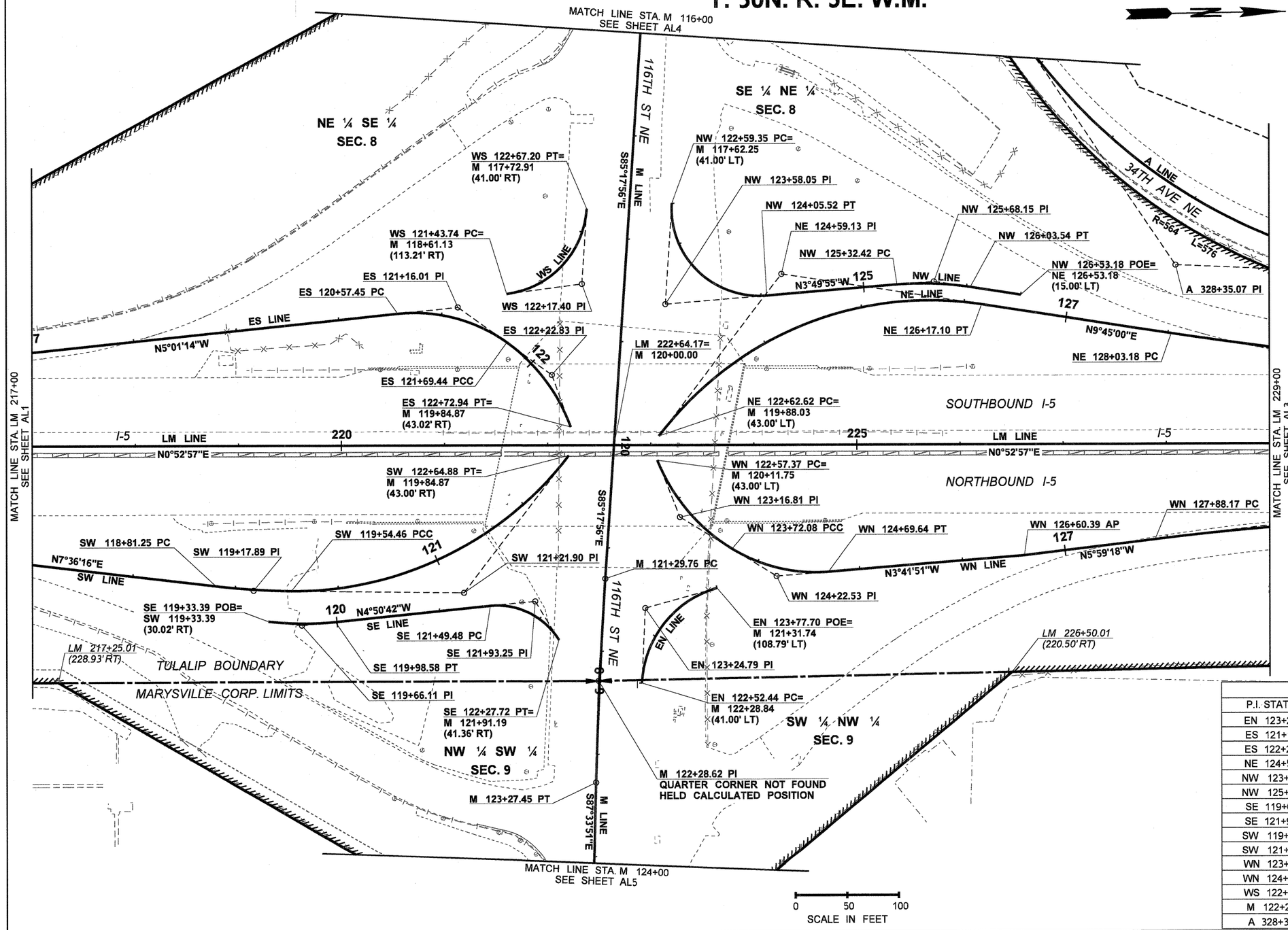

NOTE:

1. PER RCW 58.09.130, ANY MONUMENT OR CORNER DISTURBED BY THE CONTRACTOR'S OPERATION SHALL BE REPLACED AT NO COST TO THE CONTRACTING AGENCY.

ALIGNMENT COORDINATES

STATION	NORTHING	EASTING
WS 121+43.74	732197.61	1638206.91
WS 122+67.20	732276.80	1638124.90
ES 122+72.94	732257.44	1638335.99
SW 122+64.88	732255.14	1638363.92
SE 119+33.39	731961.06	1638519.56
SE 122+27.72	732242.50	1638542.29
NW 122+59.35	732359.40	1638121.00
NW 126+53.18	732696.19	1638216.37
NE 122+62.62	732342.89	1638346.19
WN 122+57.37	732340.95	1638369.83
EN 122+52.44	732322.20	1638585.28
EN 123+77.70	732396.69	1638494.76

LEGEND

- EXISTING ALIGNMENT
- CONSTRUCTION ALIGNMENT
- TEMPORARY CONSTRUCTION EASEMENT
- WSDOT RIGHT OF WAY
- LIMITED ACCESS RIGHT OF WAY
- TRIBE/COUNTY/CITY RIGHT OF WAY
- SIXTEENTH SECTION LINE
- QUARTER SECTION LINE
- SECTION LINE
- FOUND QUARTER CORNER
- NOT FOUND SECTION CORNER

CURVE DATA

P.I. STATION	DELTA	RADIUS	TANGENT	LENGTH
EN 123+24.79	71°46'03"RT	100.00'	72.35'	125.26'
ES 121+16.01	41°23'48"RT	155.00'	58.56'	111.99'
ES 122+22.83	34°40'50"RT	171.00'	53.39'	103.51'
NE 124+59.13	61°32'48"RT	330.00'	196.51'	354.48'
NW 123+58.05	98°31'59"LT	85.00'	98.70'	146.18'
NW 125+68.15	13°34'55"RT	300.00'	35.73'	71.12'
SE 119+66.11	12°26'59"RT	300.00'	32.72'	65.19'
SE 121+93.25	64°02'20"RT	70.00'	43.77'	78.24'
SW 119+17.89	5°59'33"LT	700.00'	36.64'	73.21'
SW 121+21.90	53°15'01"LT	334.00'	167.44'	310.42'
WN 123+16.81	37°03'02"LT	177.39'	59.44'	114.71'
WN 124+22.53	36°03'45"LT	155.00'	50.46'	97.56'
WS 122+17.40	78°35'52"LT	90.00'	73.66'	123.46'
M 122+28.62	2°15'55"LT	5000.00'	98.86'	197.69'
A 328+35.07	53°26'53"LT	545.00'	274.39'	508.40'

FILE NAME	U:\PSO\Projects\Clients\1598-TulalipTribes\554-1598-095 116th-Ph4-PSE\99Svcs\CADD\DGN\PS&ESheets\BL1598033_PS_ALRW.dgn
TIME	4:49:46 PM
DATE	8/24/2017
PLOTTED BY	purgabut
DESIGNED BY	M. TSUN
ENTERED BY	B. PURGANAN
CHECKED BY	D. PROCTOR
APPROVED BY	H. LONGFELLOW

REVISION | DATE | BY

REGION NO. 10 | STATE WASH | FED.AID PROJ.NO.

JOB NUMBER

CONTRACT NO. | LOCATION NO.

P.E. STAMP BOX — DATE

STEPHEN DAVID LONGFELLOW — STATE OF WASHINGTON — 37902 — REGISTERED PROFESSIONAL ENGINEER — 8/24/17

P.E. STAMP BOX — DATE

TULALIP TRIBES — Parametrix

I-5 / 116TH STREET NE INTERCHANGE IMPROVEMENTS PHASE 4 RAMPS

ALIGNMENT / RIGHT OF WAY PLAN

Plot 3

PLAN REF NO AL2

SHEET 33 OF 238 SHEETS

CURVE DATA				
P.I. STATION	DELTA	RADIUS	TANGENT	LENGTH
NE 129+60.53	6°00'18"LT	3000.00'	157.36'	314.43'
WN 129+38.18	5°43'30"RT	3000.00'	150.01'	299.76'

ALIGNMENT COORDINATES		
STATION	NORTHING	EASTING
NE 131+98.17	733233.99	1638298.74
WN 132+89.08	733322.80	1638438.16
LM 238+78.56	733924.01	1638409.35

NOTE:

1. PER RCW 58.09.130, ANY MONUMENT OR CORNER DISTURBED BY THE CONTRACTOR'S OPERATION SHALL BE REPLACED AT NO COST TO THE CONTRACTING AGENCY.

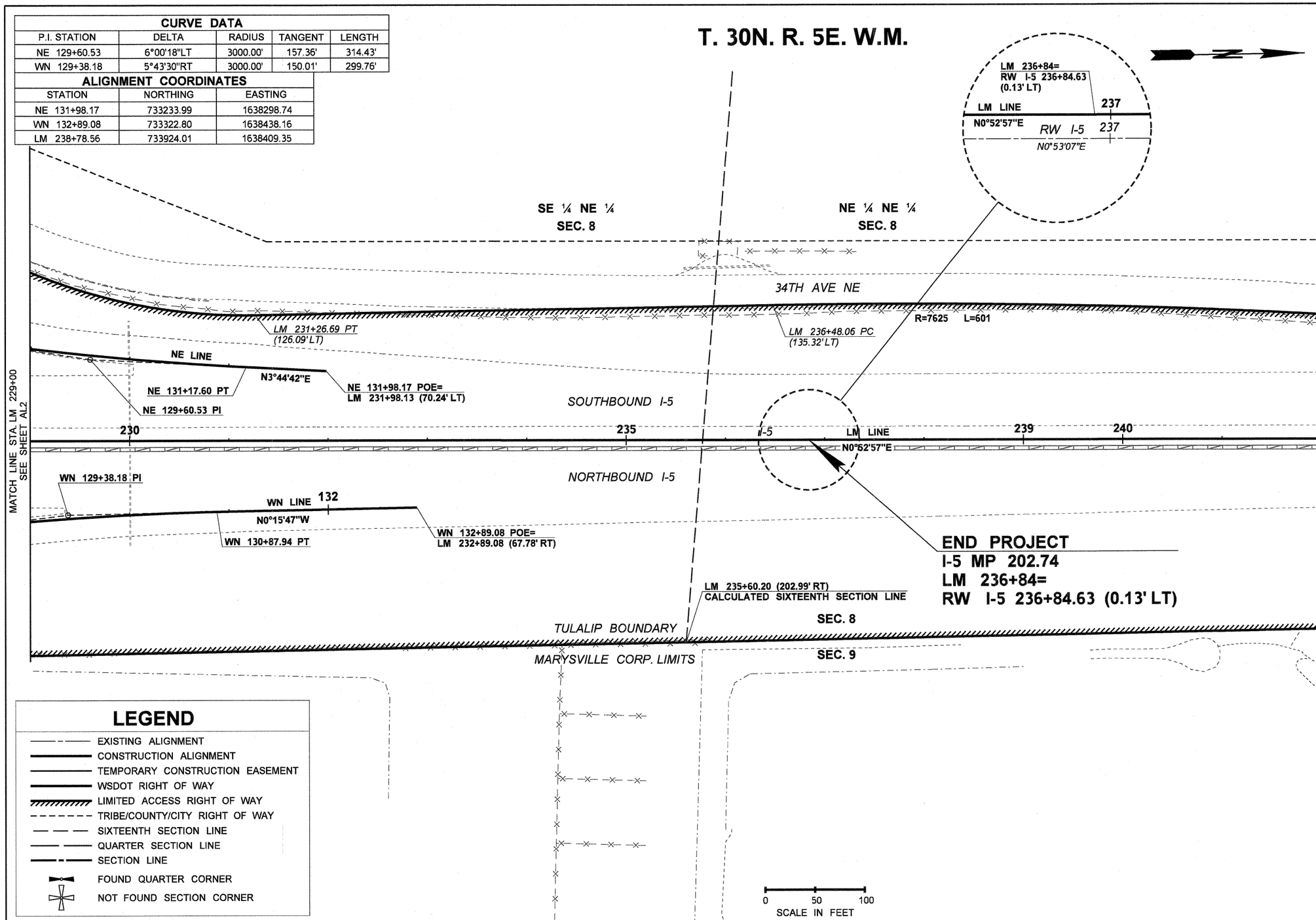

LEGEND

- EXISTING ALIGNMENT
- CONSTRUCTION ALIGNMENT
- TEMPORARY CONSTRUCTION EASEMENT
- WSDOT RIGHT OF WAY
- LIMITED ACCESS RIGHT OF WAY
- TRIBE/COUNTY/CITY RIGHT OF WAY
- SIXTEENTH SECTION LINE
- QUARTER SECTION LINE
- SECTION LINE
- FOUND QUARTER CORNER
- NOT FOUND SECTION CORNER

FILE NAME	U:\PSO\Projects\Clients\1598-TulalipTribes\554-1598-095 116th-Ph4-PSE\99Svcs\CADD\DGN\PS&ESheets\BL1598033_PS_ALRW.dgn
TIME	4:49:56 PM
DATE	8/24/2017
PLOTTED BY	purgabut
DESIGNED BY	M. TSUN
ENTERED BY	B. PURGANAN
CHECKED BY	D. PROCTOR
APPROVED BY	H. LONGFELLOW

REVISION	DATE	BY

REGION NO.	STATE	FED.AID PROJ.NO.
10	WASH	
JOB NUMBER		
CONTRACT NO.		LOCATION NO.

P.E. STAMP BOX — DATE

HARRY DAVID LONGFELLOW — STATE OF WASHINGTON — 37602 — REGISTERED PROFESSIONAL ENGINEER — 8/25/17

P.E. STAMP BOX — DATE

TULALIP TRIBES — Parametrix

I-5 / 116TH STREET NE
INTERCHANGE IMPROVEMENTS
PHASE 4 RAMPS

ALIGNMENT / RIGHT OF WAY PLAN

Plot 4

PLAN REF NO
AL3

SHEET 34 OF 238 SHEETS

CURVE DATA				
P.I. STATION	DELTA	RADIUS	TANGENT	LENGTH
A 322+18.31	52°24'12"RT	200.00'	98.42'	182.92'
US 321+11.43	26°55'31"RT	310.00'	74.21'	145.68'

ALIGNMENT COORDINATES		
STATION	NORTHING	EASTING
M 106+49.00	732409.78	1637008.13
US 322+00.00	732356.98	1637650.15

T. 30N. R. 5E. W.M.

NOTE:

1. PER RCW 58.09.130, ANY MONUMENT OR CORNER DISTURBED BY THE CONTRACTOR'S OPERATION SHALL BE REPLACED AT NO COST TO THE CONTRACTING AGENCY.

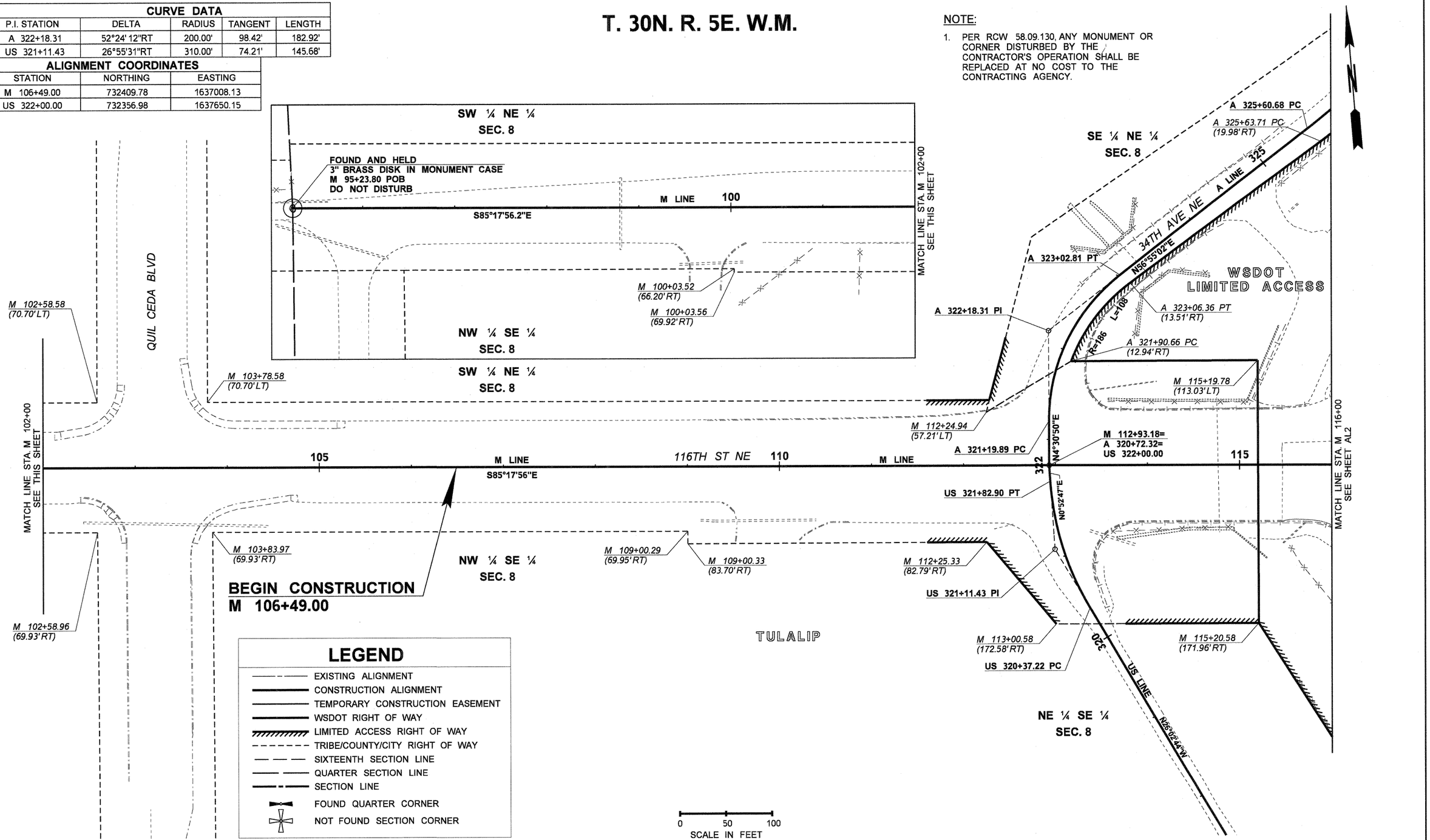

FILE NAME	U:\PSO\Projects\Clients\1598-TulalipTribes\554-1598-095 116th-Ph4-PSE\99Svcs\CADD\DGN\PS&ESheets\BL1598033_PS_ALRW.dgn
TIME	4:50:06 PM
DATE	8/24/2017
PLOTTED BY	purgabut
DESIGNED BY	M. TSUN
ENTERED BY	B. PURGANAN
CHECKED BY	D. PROCTOR
APPROVED BY	H. LONGFELLOW

REVISION	DATE	BY

REGION NO.	STATE	FED.AID PROJ.NO.
10	WASH	
JOB NUMBER		
CONTRACT NO.		LOCATION NO.

DATE
P.E. STAMP BOX

HARRY DAVID LONGFELLOW
STATE OF WASHINGTON
37902
REGISTERED PROFESSIONAL ENGINEER
DATE
P.E. STAMP BOX

TULALIP TRIBES
Parametrix

I-5 / 116TH STREET NE
INTERCHANGE IMPROVEMENTS
PHASE 4 RAMPS

ALIGNMENT / RIGHT OF WAY PLAN

Plot 6
PLAN REF NO
AL4
SHEET 35 OF 238 SHEETS

ALIGNMENT COORDINATES		
STATION	NORTHING	EASTING
M 129+16.94	732251.06	1639270.17

T. 30N. R. 5E. W.M.

NOTE:

1. PER RCW 58.09.130, ANY MONUMENT OR CORNER DISTURBED BY THE CONTRACTOR'S OPERATION SHALL BE REPLACED AT NO COST TO THE CONTRACTING AGENCY.

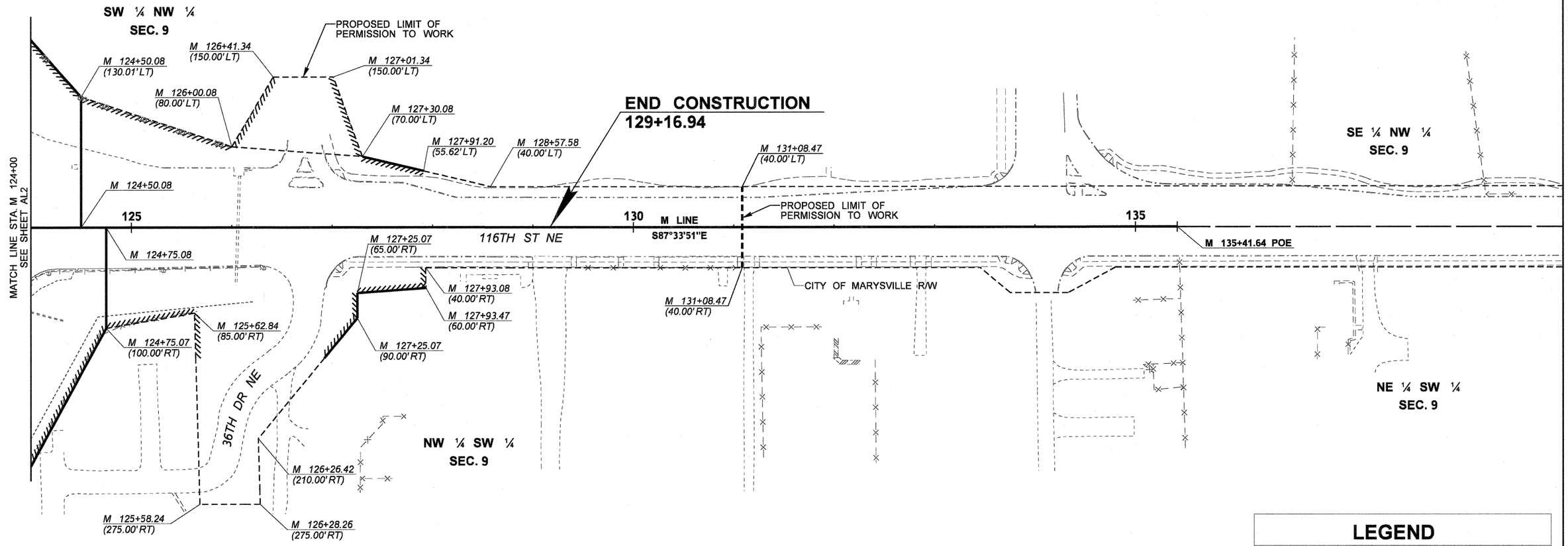

LEGEND

- EXISTING ALIGNMENT
- CONSTRUCTION ALIGNMENT
- TEMPORARY CONSTRUCTION EASEMENT
- WSDOT RIGHT OF WAY
- LIMITED ACCESS RIGHT OF WAY
- TRIBE/COUNTY/CITY RIGHT OF WAY
- SIXTEENTH SECTION LINE
- QUARTER SECTION LINE
- SECTION LINE
- FOUND QUARTER CORNER
- NOT FOUND SECTION CORNER

0 50 100
SCALE IN FEET

FILE NAME	U:\PSO\Projects\Clients\1598-TulalipTribes\554-1598-095 116th-Ph4-PSE\99Svcs\CADD\DGN\PS&ESheets\BL1598033_PS_ALRW.dgn
TIME	4:50:16 PM
DATE	8/24/2017
PLOTTED BY	purgabut
DESIGNED BY	M. TSUN
ENTERED BY	B. PURGANAN
CHECKED BY	D. PROCTOR
APPROVED BY	H. LONGFELLOW

REVISION	DATE	BY

REGION NO.	STATE	FED.AID PROJ.NO.
10	WASH	
JOB NUMBER		
CONTRACT NO.		LOCATION NO.

P.E. STAMP BOX DATE

STATE OF WASHINGTON HARRY DAVID LONGFELLOW 37902 REGISTERED PROFESSIONAL ENGINEER 8/24/17

P.E. STAMP BOX DATE

TULALIP TRIBES Parametrix

I-5 / 116TH STREET NE
INTERCHANGE IMPROVEMENTS
PHASE 4 RAMPS

ALIGNMENT / RIGHT OF WAY PLAN

Plot 7
PLAN REF NO
AL5
SHEET 36 OF 238 SHEETS

QUANTITY TABULATION - SITE PREPARATION

NOTE:
THE FIRST NUMBER OF THE "CODE" BELOW REFERS TO THE SHEET NO. OR THE SHEET REFERENCE NO. SHOWING THE CONSTRUCTION FEATURE.

THE SECOND NUMBER REFERS TO THE CONSTRUCTION FEATURE FOUND ON THAT SHEET.

CODE	LOCATION ⤵ \ UNIT OF MEASURE ➢	REMOVING CEMENT CONC. SIDEWALK	REMOVING ASPHALT CONC. PAVEMENT	REMOVING ASHPALT CONC. CURB	REMOVING CONC. BARRIER	REMOVING TRAFFIC CURB	REMOVING GUARDRAIL	REMOVING GUARDRAIL ANCHOR		REMOVING GUIDE POST	REMOVING PAINT LINE	REMOVING PLASTIC LINE	REMOVING PAINTED TRAFFIC MARKING	REMOVING CHAIN LINK FENCE	REMOVING IMPACT ATTENUATOR		SEE GENERAL NOTES
		S.Y.	S.Y.	L.F.	L.F.	L.F.	L.F.	EACH		EACH	L.F.	L.F.	EACH	L.F.	EACH		
SP1-1	LM 205+33.1 (71.6' RT) TO M 126+33.7 (39.1' RT)						1963	1									
SP1-2	LM 212+61.9 (94.6' LT) TO M 115+74.6 (61.4' RT)						1075	1									
SP1-3	NOT USED																
SP1-4	NOT USED																
SP1-5	NOT USED																
SP1-6	NOT USED																
SP1-7	NOT USED																
SP1-8	NOT USED																
SP1-9	NOT USED																
SP1-10	NOT USED																
SP1-11	NOT USED																
SP1-12	LM 207+36.7 (73.8' RT) TO SW 113+36.9 (23.1' RT)			600													1
SP2-1	M 118+81.5 (60.0' RT) TO M 121+21.2 (46.0' RT)													244			1
SP2-2	M 118+85.7 (96.4' LT) TO M 120+75.7 (98.5' LT)													191			1
SP2-3	LM 211+31.3 (RT) TO M 123+62.2 (RT)		4078														
SP2-4	LM 212+45.9 (LT) TO M 116+77.6 (RT)		3520														
SP2-5	ES 118+39.3 (36.8' LT)									1							1
SP2-6	M 116+24.1 (LT) TO LM 231+93.5 (LT)		3417														
SP2-7	M 123+49.3 (LT) TO LM 233+19.2 (RT)		4426														
SP2-8	M 122+86.8 (113.9' RT)									1							1
SP2-9	NE 125+91.8 (105.7' LT) TO LM 235+72.9 (62.9' LT)				1000										1		
SP2-10	WN 124+64.8 (139.8' RT) TO LM 238+11.9 (73.3' RT)				1377										1		
SP2-11	M 116+90.0 (37.0' RT) TO M 123+10.0 (4.8' RT) (28.8' RT)										1004						1
SP2-12	M 116+93.9 (25.0' RT) TO M 123+20.6 (16.8' RT)										628						1
SP2-13	M 117+04.3 (5.3' RT) TO M 122+86.1 (14.4' LT)										1480						1
SP2-14	M 116+90.0 (15.0' LT) (39.0' LT) TO M 122+45.7 (45.4' LT)										940						1
SP2-15	M 116+90.0 (28.0' LT) TO M 123+00.0 (32.6' LT)										609						1
SP2-16	M 117+78.1 (9.0' LT)												1				1
SP2-17	M 118+72.7 (11.0' LT)												1				1
SP2-18	M 119+38.6 (2.2' RT)												1				1
SP2-19	M 119+77.9 (11.5' LT)												1				1
	SHEET TOTAL	0	15,441	600	2,377	0	3,038	2		2	4,661	0	4	435	2		

GENERAL NOTES:

1. BID ITEM AND QUANTITIES ARE FOR INFORMATION ONLY. INCLUDED IN LUMP SUM BID ITEM "REMOVAL OF STRUCTURES AND OBSTRUCTIONS".

DESIGNED BY	M. TSUN			
ENTERED BY	M. TSUN			
CHECKED BY	D. PROCTOR			
APPROVED BY	H.LONGFELLOW			
		DATE	DATE	REVISION	BY

REGION NO.	STATE	FED. AID PROJ. NO.
10	WASH	
JOB NUMBER		
CONTRACT NO.		

TULALIP TRIBES
Parametrix

I-5 / 116TH STREET NE
INTERCHANGE IMPROVEMENTS
PHASE 4 RAMPS

QUANTITY TABULATION - SITE PREPARATION

QTSP1

SHEET 37 OF 238 SHEETS

QUANTITY TABULATION - SITE PREPARATION

NOTE:
THE FIRST NUMBER OF THE "CODE" BELOW REFERS TO THE SHEET NO. OR THE SHEET REFERENCE NO. SHOWING THE CONSTRUCTION FEATURE.

THE SECOND NUMBER REFERS TO THE CONSTRUCTION FEATURE FOUND ON THAT SHEET.

CODE	LOCATION ↓ \ UNIT OF MEASURE →	REMOVING CEMENT CONC. SIDEWALK	REMOVING ASPHALT CONC. PAVEMENT	REMOVING ASHPALT CONC. CURB	REMOVING CONC. BARRIER	REMOVING TRAFFIC CURB	REMOVING GUARDRAIL	REMOVING GUARDRAIL ANCHOR		REMOVING GUIDE POST	REMOVING PAINT LINE	REMOVING PLASTIC LINE	REMOVING PAINTED TRAFFIC MARKING	REMOVING CHAIN LINK FENCE	REMOVING IMPACT ATTENUATOR		SEE GENERAL NOTES
		S.Y.	S.Y.	L.F.	L.F.	L.F.	L.F.	EACH		EACH	L.F.	L.F.	EACH	L.F.	EACH		
SP2-20	M 120+25.0 (0.8' RT)												1				1
SP2-21	M 120+64.1 (12.9' LT)												1				1
SP2-22	M 121+33.2 (0.9' LT)												1				1
SP2-23	M 122+25.2 (1.3' LT)												1				1
SP2-24	M 121+87.8 (107.2' LT)									1							1
SP2-25	M 120+76.0 (108.4' LT)									1							1
SP2-26	M 119+08.0 (132.6' LT)									1							1
SP2-27	M 117+86.4 (98.0' LT)									1							1
SP2-28	NE 125+15.2 (122.1' LT)									1							1
SP2-29	NE 124+80.5 (164.1' LT)									1							1
SP2-30	M 116+86.6 (93.9' LT)									1							1
SP2-31	M 116+94.4 (119.7' RT)									1							1
SP2-32	M 116+79.7 (84.2' RT)									1							1
SP2-33	M 117+63.4 (82.0' RT)									1							1
SP2-34	M 118+47.4 (80.8' RT)									1							1
SP2-35	M 119+24.0 (107.7' RT)									1							1
SP2-36	M 120+91.9 (130.2' RT)									1							1
SP2-37	M 121+57.1 (79.5' RT)									1							1
SP2-38	M 122+36.8 (66.6' RT)									1							1
SP2-39	M 123+18.7 (67.9' RT)									1							1
SP2-40	M 123+01.1 (169.4' RT)									1							1
SP2-41	M 123+47.9 (195.2' RT)									1							1
SP2-42	M 123+65.9 (147.5' RT)									1							1
SP2-43	M 123+78.3 (93.1' RT)									1							1
SP2-44	M 123+85.6 (72.3' RT)									1							1
SP2-45	M 123+98.8 (56.4' RT)									1							1
SP2-46	NE 125+93.7 (158.4' LT) TO NE 125+83.7 (87.1' LT)		113														
SP2-47	NE 125+84.2 (136.9' LT) TO NE 126+10.1 (161.3' LT)			48													1
SP2-48	NE 125+82.6 (133.2' LT) TO NE 126+27.7 (156.0' LT)													92			1
SP2-49	LM 218+88.2 (117.7' LT) TO LM 220+21.2 (93.9' LT)													162			1
SP2-50	M 115+92.6 (74.8' LT) TO M 116+10.9 (105.6' LT)	37															1
	SHEET TOTAL	37	113	48	0	0	0	0		22	0	0	4	254	0		

GENERAL NOTES:

1. BID ITEM AND QUANTITIES ARE FOR INFORMATION ONLY. INCLUDED IN LUMP SUM BID ITEM "REMOVAL OF STRUCTURES AND OBSTRUCTIONS".

DESIGNED BY	M. TSUN		
ENTERED BY	M. TSUN		
CHECKED BY	D. PROCTOR		
APPROVED BY	H.LONGFELLOW		
		DATE	DATE

REVISION | BY

REGION NO.	STATE	FED. AID PROJ. NO.
10	WASH	

JOB NUMBER

CONTRACT NO.

TULALIP TRIBES ©
Parametrix

I-5 / 116TH STREET NE
INTERCHANGE IMPROVEMENTS
PHASE 4 RAMPS

QUANTITY TABULATION - SITE PREPARATION

QTSP2

SHEET 38 OF 238 SHEETS

QUANTITY TABULATION - SITE PREPARATION

NOTE:
THE FIRST NUMBER OF THE "CODE" BELOW REFERS TO THE SHEET NO. OR THE SHEET REFERENCE NO. SHOWING THE CONSTRUCTION FEATURE.

THE SECOND NUMBER REFERS TO THE CONSTRUCTION FEATURE FOUND ON THAT SHEET.

CODE	LOCATION ➢ \ UNIT OF MEASURE ➢	REMOVING CEMENT CONC. SIDEWALK	REMOVING ASPHALT CONC. PAVEMENT	REMOVING ASHPALT CONC. CURB	REMOVING CONC. BARRIER	REMOVING TRAFFIC CURB	REMOVING GUARDRAIL	REMOVING GUARDRAIL ANCHOR		REMOVING GUIDE POST	REMOVING PAINT LINE	REMOVING PLASTIC LINE	REMOVING PAINTED TRAFFIC MARKING	REMOVING CHAIN LINK FENCE	REMOVING IMPACT ATTENUATOR		SEE GENERAL NOTES
		S.Y.	S.Y.	L.F.	L.F.	L.F.	L.F.	EACH		EACH	L.F.	L.F.	EACH	L.F.	EACH		
SP4-1	M 106+99.1 (42.0' LT) TO M 112+82.7 (96.5' LT)										610						1
SP4-2	M 106+61.7 (30.1' LT) TO M 110+21.5 (29.7' LT)											360					1
SP4-3	M 106+61.8 (18.1' LT) TO M 110+39.7 (16.9' LT)											379					1
SP4-4	M 107+48.9 (18.0' RT) TO M 109+47.3 (18.2' RT)											198					1
SP4-5	M 107+48.9 (30.0' RT) TO M 109+39.5 (30.0' RT)										191						1
SP4-6	M 110+17.2 (83.4' RT) TO US 321+23.2 (20.9' LT)										293						1
SP4-7	M 110+21.5 (29.7' LT) TO M 113+30.0 (34.0' LT)										309						1
SP4-8	M 110+41.1 (17.0' LT) TO M 113+30.0 (21.9' LT)										289						1
SP4-9	M 110+91.4 (0.0')												1				1
SP4-10	M 112+58.7 (0.0')												1				1
SP4-11	M 110+36.6 (8.1' RT) TO M 113+30.0 (0.0') (2.8' LT)										679						1
SP4-12	M 115+47.8 (61.5' LT) TO M 115+76.1 (65.6' LT)						29	1									
SP4-13	M 106+49.0 (30.0' LT) TO M 106+61.7 (30.1' LT)											13					1
SP4-14	M 106+49.0 (18.0' LT) TO M 106+61.8 (18.1' LT)											13					1
SP4-15	M 111+99.5 (5.7' RT, 11.7' RT) TO M 113+67.8 (4.0' LT, 7.7' RT)											337					1
SP4-16	M 109+86.2 (5.8' LT) TO M 110+45.2 (6.0' LT)										59						1
SP4-17	M 110+45.2 (6.0' LT) TO M 112+70.2 (9.1' LT)											225					1
SP4-18	M 110+73.3 (32.9') TO M 113+30.0 (38.6' RT)										383						1
SP4-19	M 110+79.4 (45.7' RT) TO M 112+20.2 (48.2' RT)										124						1
SP4-20	M 110+44.4 (42.3' LT) TO M 112+81.3 (93.3' LT)										255						1
SP4-21	M 110+80.5 (42.5' LT) TO M 112+46.6 (52.6' LT)										46						1
SP5-1	M 126+60.6 (9.4' LT) TO M 127+01.1 (8.4' LT)					42											1
SP5-2	M 126+61.7 (4.4' RT) TO M 128+48.9 (7.6' LT)										192						1
SP5-3	M 124+17.9 (45.5' RT)									1							1
SP5-4	M 125+51.1 (50.3' LT) TO M 126+15.0 (40.6' LT)										84						1
SP5-5	M 126+48.2 (35.8' LT) TO M 126+72.2 (82.6' LT)										54						1
SP5-6	M 126+72.2 (82.6' LT) TO M 127+19.5 (33.9' LT)										74						1
SP5-7	M 126+48.2 (35.8' LT) TO M 127+75.4 (32.5' LT)										127						1
SP5-8	M 127+38.8 (2.2' LT)												1				1
SP5-9	M 125+32.4 (50.7' LT) TO M 126+56.6 (82.4' LT)										147						1
SP5-10	M 126+60.0 (23.4' LT) TO M 129+07.5 (17.4' LT)										248						1
	SHEET TOTAL	0	0	0	0	42	29	1		1	4,164	1,525	3	0	0		
	PROJECT TOTAL	**37**	**15,554**	**648**	**2,377**	**42**	**3,067**	**3**		**25**	**8,825**	**1,525**	**11**	**689**	**2**		

GENERAL NOTES:

1. BID ITEM AND QUANTITIES ARE FOR INFORMATION ONLY. INCLUDED IN LUMP SUM BID ITEM "REMOVAL OF STRUCTURES AND OBSTRUCTIONS".

DESIGNED BY	M. TSUN		
ENTERED BY	M. TSUN		
CHECKED BY	D. PROCTOR		
APPROVED BY	H.LONGFELLOW		
		DATE	DATE

REVISION | BY

REGION NO.	STATE	FED. AID PROJ. NO.
10	WASH	

JOB NUMBER

CONTRACT NO.

TULALIP TRIBES
Parametrix

I-5 / 116TH STREET NE
INTERCHANGE IMPROVEMENTS
PHASE 4 RAMPS

QUANTITY TABULATION - SITE PREPARATION

QTSP3

SHEET 39 OF 238 SHEETS

LEGEND

- QUANTITY TAB NOTE
- QUANTITY TAB NOTE CONTINUED
- CULVERT
- DITCH BOTTOM
- FENCE
- GUARDRAIL
- GRAVEL EDGE
- PAVED EDGE
- BRIDGE
- RETAINING WALL
- TRAFFIC BARRIER
- BUILDINGS
- STREAM EDGE
- CLEARING AND GRUBBING BOUNDARY
- REMOVE ASPHALT CONC PAVEMENT
- GAS LINE
- WATER LINE
- ABOVEGROUND POWER
- ABOVE GROUND TELEPHONE
- UNDERGROUND FIBER OPTIC
- UNDERGROUND POWER
- UNDERGROUND TELEPHONE
- CABLE BARRIER
- ITS CONDUIT AND WIRING
- FIRE HYDRANT
- GUY ANCHOR
- GUIDE POST
- GUY POLE
- UTILITY POLE
- WATER METER BOX
- WATER VALVE
- GAS VALVE
- UTILITY BOX
- LIGHT STANDARD - SINGLE
- UNDERGROUND POWER VAULT
- POWER BOX
- POWER POLE
- TELEPHONE BOX
- TELEPHONE RISER
- UNDERGROUND CABLE BOX
- UNDERGROUND COMMUNICATION VAULT
- UNDERGROUND TELEPHONE BOX
- TREE
- TREE PROTECTION HIGH VISIBILITY FENCE
- HIGH VISIBILITY FENCE
- HIGH VISIBILITY SILT FENCE

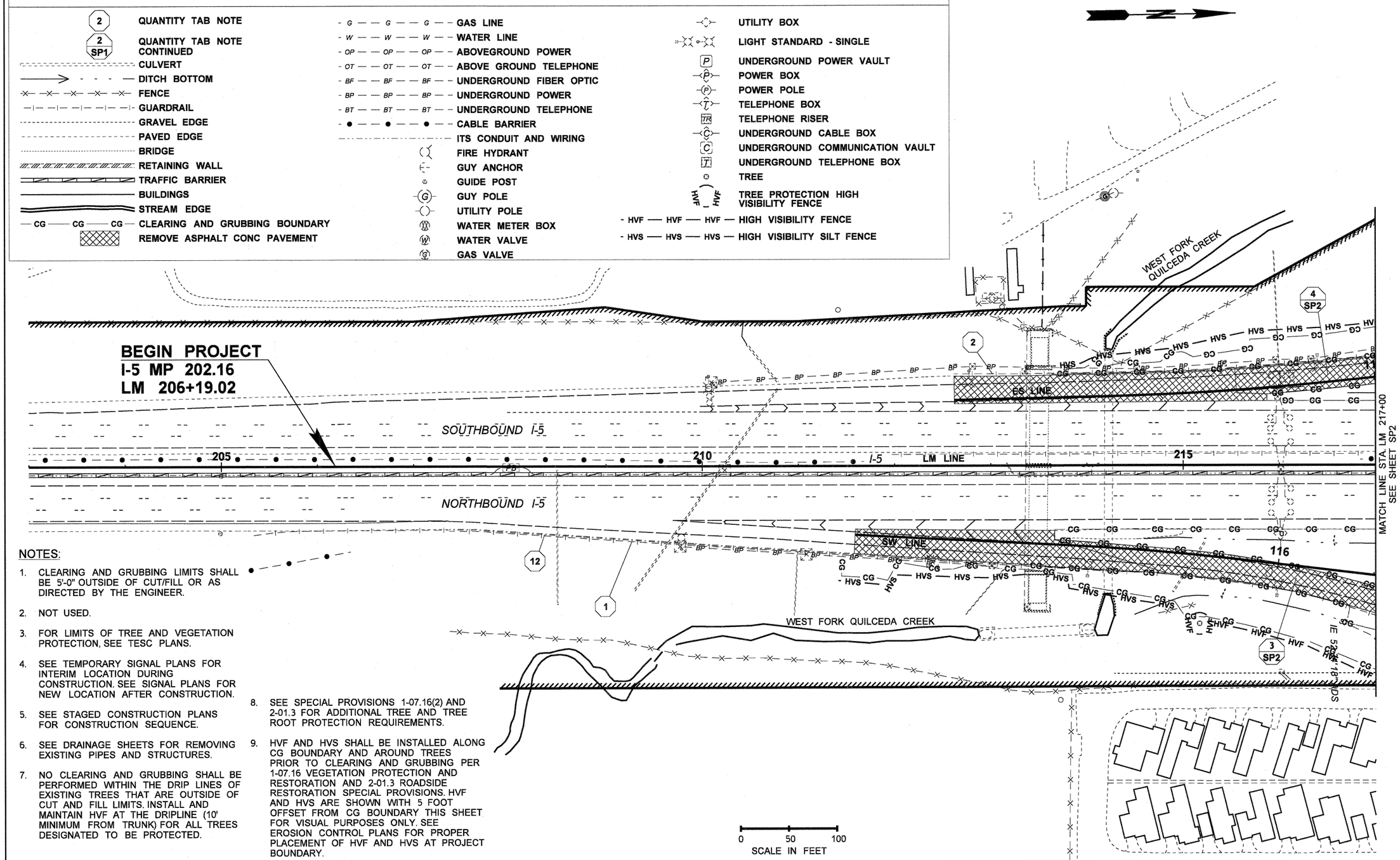

NOTES:

1. CLEARING AND GRUBBING LIMITS SHALL BE 5'-0" OUTSIDE OF CUT/FILL OR AS DIRECTED BY THE ENGINEER.
2. NOT USED.
3. FOR LIMITS OF TREE AND VEGETATION PROTECTION, SEE TESC PLANS.
4. SEE TEMPORARY SIGNAL PLANS FOR INTERIM LOCATION DURING CONSTRUCTION. SEE SIGNAL PLANS FOR NEW LOCATION AFTER CONSTRUCTION.
5. SEE STAGED CONSTRUCTION PLANS FOR CONSTRUCTION SEQUENCE.
6. SEE DRAINAGE SHEETS FOR REMOVING EXISTING PIPES AND STRUCTURES.
7. NO CLEARING AND GRUBBING SHALL BE PERFORMED WITHIN THE DRIP LINES OF EXISTING TREES THAT ARE OUTSIDE OF CUT AND FILL LIMITS. INSTALL AND MAINTAIN HVF AT THE DRIPLINE (10' MINIMUM FROM TRUNK) FOR ALL TREES DESIGNATED TO BE PROTECTED.
8. SEE SPECIAL PROVISIONS 1-07.16(2) AND 2-01.3 FOR ADDITIONAL TREE AND TREE ROOT PROTECTION REQUIREMENTS.
9. HVF AND HVS SHALL BE INSTALLED ALONG CG BOUNDARY AND AROUND TREES PRIOR TO CLEARING AND GRUBBING PER 1-07.16 VEGETATION PROTECTION AND RESTORATION AND 2-01.3 ROADSIDE RESTORATION SPECIAL PROVISIONS. HVF AND HVS ARE SHOWN WITH 5 FOOT OFFSET FROM CG BOUNDARY THIS SHEET FOR VISUAL PURPOSES ONLY. SEE EROSION CONTROL PLANS FOR PROPER PLACEMENT OF HVF AND HVS AT PROJECT BOUNDARY.

FILE NAME	U:\PSO\Projects\Clients\1598-TulalipTribes\554-1598-095 116th-Ph4-PSE\99Svcs\CADD\DGN\PS&ESheets\BL1598033_PS_SP.dgn
TIME	4:53:08 PM
DATE	8/24/2017
PLOTTED BY	purgabut
DESIGNED BY	M. TSUN
ENTERED BY	B. PURGANAN
CHECKED BY	D. PROCTOR
APPROVED BY	H. LONGFELLOW

REVISION	DATE	BY

REGION NO.	STATE	FED.AID PROJ.NO.
10	WASH	
JOB NUMBER		
CONTRACT NO.		LOCATION NO.

P.E. STAMP BOX — DATE

HARRY DAVID LONGFELLOW — STATE OF WASHINGTON — 37802 — REGISTERED PROFESSIONAL ENGINEER — 8/24/17

P.E. STAMP BOX — DATE

TULALIP TRIBES — Parametrix

I-5 / 116TH STREET NE INTERCHANGE IMPROVEMENTS PHASE 4 RAMPS

SITE PREPARATION / EXISTING UTILITIES PLAN

Plot 2

PLAN REF NO SP1

SHEET 40 OF 238 SHEETS

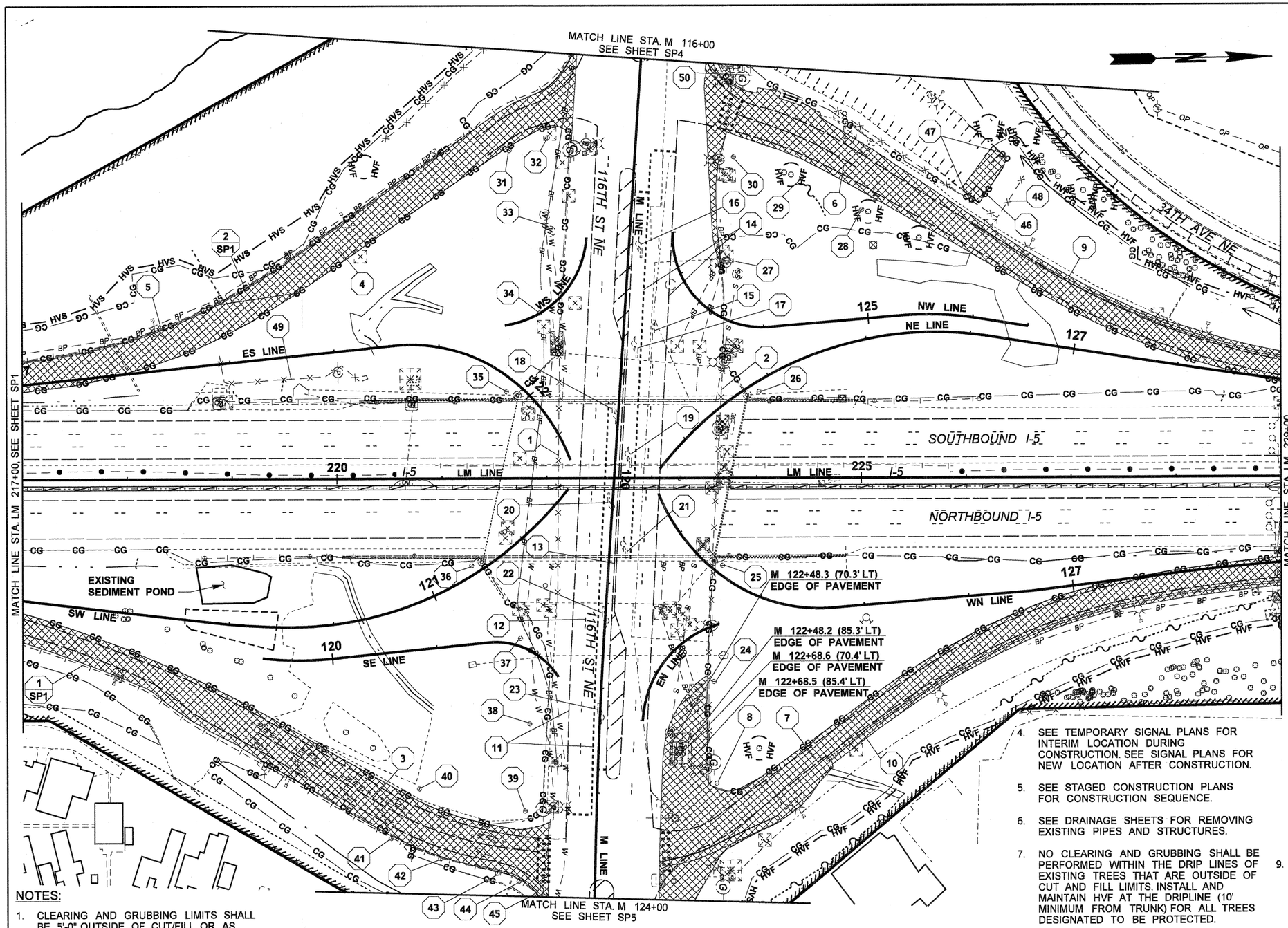

LEGEND

- QUANTITY TAB NOTE
- QUANTITY TAB NOTE CONTINUED
- CULVERT
- DITCH BOTTOM
- FENCE
- GUARDRAIL
- GRAVEL EDGE
- PAVED EDGE
- BRIDGE
- RETAINING WALL
- TRAFFIC BARRIER
- BUILDINGS
- STREAM EDGE
- CLEARING AND GRUBBING BOUNDARY
- REMOVE ASPHALT CONC PAVEMENT
- GAS LINE
- WATER LINE
- ABOVEGROUND POWER
- ABOVE GROUND TELEPHONE
- UNDERGROUND FIBER OPTIC
- UNDERGROUND POWER
- UNDERGROUND TELEPHONE
- CABLE BARRIER
- ITS CONDUIT AND WIRING
- FIRE HYDRANT
- GUY ANCHOR
- GUIDE POST
- GUY POLE
- UTILITY POLE
- WATER METER BOX
- WATER VALVE
- GAS VALVE
- UTILITY BOX
- LIGHT STANDARD - SINGLE
- UNDERGROUND POWER VAULT
- POWER BOX
- POWER POLE
- TELEPHONE BOX
- TELEPHONE RISER
- UNDERGROUND CABLE BOX
- UNDERGROUND COMMUNICATION VAULT
- UNDERGROUND TELEPHONE BOX
- TREE
- TREE PROTECTION HIGH VISIBILITY FENCE
- HIGH VISIBILITY FENCE
- HIGH VISIBILITY SILT FENCE

NOTES:

1. CLEARING AND GRUBBING LIMITS SHALL BE 5'-0" OUTSIDE OF CUT/FILL OR AS DIRECTED BY THE ENGINEER.
2. NOT USED.
3. FOR LIMITS OF TREE AND VEGETATION PROTECTION, SEE TESC PLANS.
4. SEE TEMPORARY SIGNAL PLANS FOR INTERIM LOCATION DURING CONSTRUCTION. SEE SIGNAL PLANS FOR NEW LOCATION AFTER CONSTRUCTION.
5. SEE STAGED CONSTRUCTION PLANS FOR CONSTRUCTION SEQUENCE.
6. SEE DRAINAGE SHEETS FOR REMOVING EXISTING PIPES AND STRUCTURES.
7. NO CLEARING AND GRUBBING SHALL BE PERFORMED WITHIN THE DRIP LINES OF EXISTING TREES THAT ARE OUTSIDE OF CUT AND FILL LIMITS. INSTALL AND MAINTAIN HVF AT THE DRIPLINE (10' MINIMUM FROM TRUNK) FOR ALL TREES DESIGNATED TO BE PROTECTED.
8. SEE SPECIAL PROVISIONS 1-07.16(2) AND 2-01.3 FOR ADDITIONAL TREE AND TREE ROOT PROTECTION REQUIREMENTS.
9. HVF AND HVS SHALL BE INSTALLED ALONG CG BOUNDARY AND AROUND TREES PRIOR TO CLEARING AND GRUBBING PER 1-07.16 VEGETATION PROTECTION AND RESTORATION AND 2-01.3 ROADSIDE RESTORATION SPECIAL PROVISIONS. HVF AND HVS ARE SHOWN WITH 5 FOOT OFFSET FROM CG BOUNDARY THIS SHEET FOR VISUAL PURPOSES ONLY. SEE EROSION CONTROL PLANS FOR PROPER PLACEMENT OF HVF AND HVS AT PROJECT BOUNDARY.

FILE NAME	U:\PSO\Projects\Clients\1598-TulalipTribes\554-1598-095 116th-Ph4-PSE\99Svcs\CADD\DGN\PS&ESheets\BL1598033_PS_SP.dgn
TIME	4:53:22 PM
DATE	8/24/2017
PLOTTED BY	purgabut
DESIGNED BY	M. TSUN
ENTERED BY	B. PURGANAN
CHECKED BY	D. PROCTOR
APPROVED BY	H. LONGFELLOW

REVISION | DATE | BY

REGION NO. 10 | STATE WASH | FED.AID PROJ.NO.

JOB NUMBER

CONTRACT NO. | LOCATION NO.

P.E. STAMP BOX — DATE

HENRY DAVID LONGFELLOW — STATE OF WASHINGTON — 37902 — REGISTERED PROFESSIONAL ENGINEER — 8/25/17

P.E. STAMP BOX — DATE

TULALIP TRIBES — Parametrix

I-5 / 116TH STREET NE INTERCHANGE IMPROVEMENTS PHASE 4 RAMPS

SITE PREPARATION / EXISTING UTILITIES PLAN

Plot 3

PLAN REF NO SP2

SHEET 41 OF 238 SHEETS

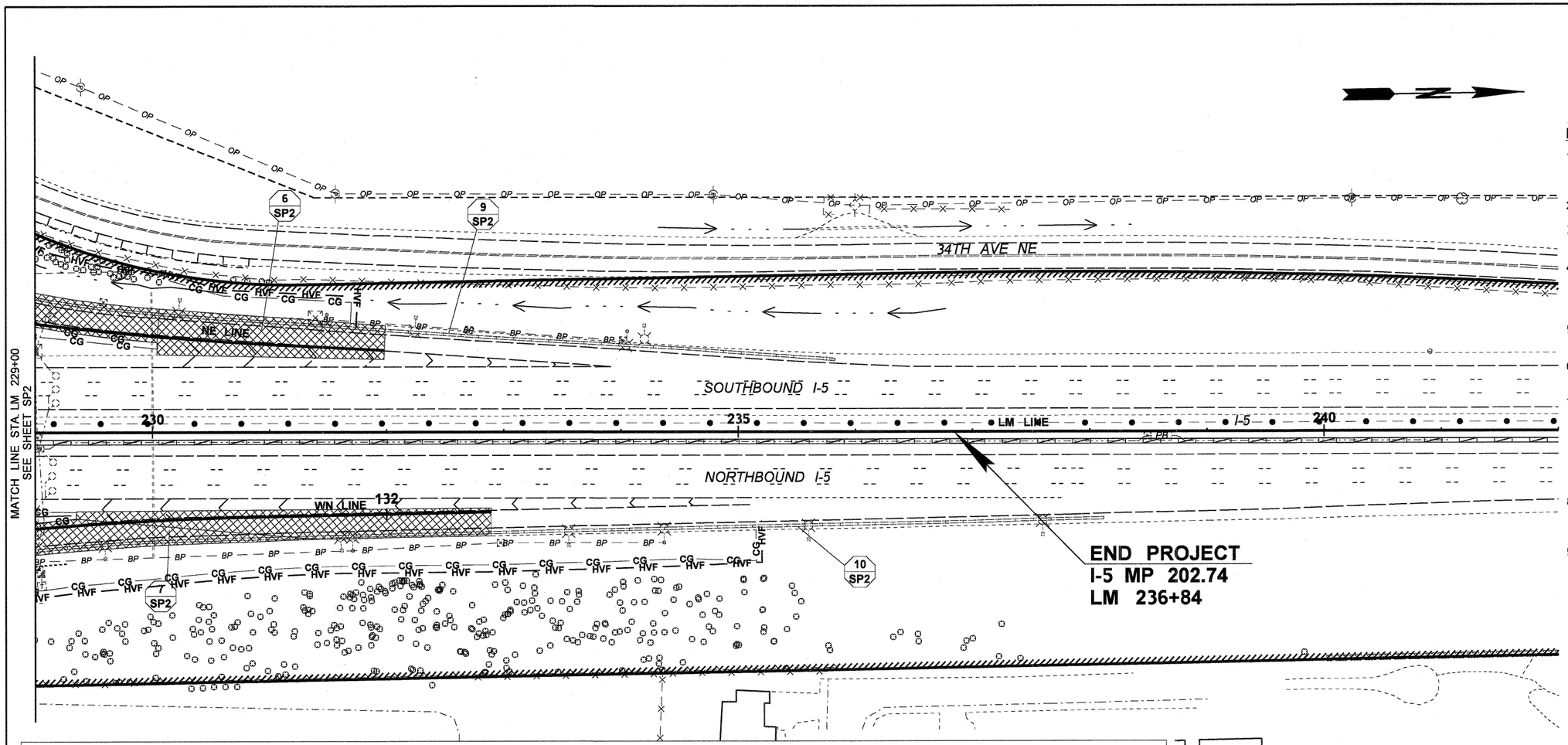

NOTES:

1. CLEARING AND GRUBBING LIMITS SHALL BE 5'-0" OUTSIDE OF CUT/FILL OR AS DIRECTED BY THE ENGINEER.
2. NOT USED.
3. FOR LIMITS OF TREE AND VEGETATION PROTECTION, SEE TESC PLANS.
4. SEE TEMPORARY SIGNAL PLANS FOR INTERIM LOCATION DURING CONSTRUCTION. SEE SIGNAL PLANS FOR NEW LOCATION AFTER CONSTRUCTION.
5. SEE STAGED CONSTRUCTION PLANS FOR CONSTRUCTION SEQUENCE.
6. SEE DRAINAGE SHEETS FOR REMOVING EXISTING PIPES AND STRUCTURES.
7. NO CLEARING AND GRUBBING SHALL BE PERFORMED WITHIN THE DRIP LINES OF EXISTING TREES THAT ARE OUTSIDE OF CUT AND FILL LIMITS. INSTALL AND MAINTAIN HVF AT THE DRIPLINE (10' MINIMUM FROM TRUNK) FOR ALL TREES DESIGNATED TO BE PROTECTED.
8. SEE SPECIAL PROVISIONS 1-07.16(2) AND 2-01.3 FOR ADDITIONAL TREE AND TREE ROOT PROTECTION REQUIREMENTS.
9. HVF AND HVS SHALL BE INSTALLED ALONG CG BOUNDARY AND AROUND TREES PRIOR TO CLEARING AND GRUBBING PER 1-07.16 VEGETATION PROTECTION AND RESTORATION AND 2-01.3 ROADSIDE RESTORATION SPECIAL PROVISIONS. HVF AND HVS ARE SHOWN WITH 5 FOOT OFFSET FROM CG BOUNDARY THIS SHEET FOR VISUAL PURPOSES ONLY. SEE EROSION CONTROL PLANS FOR PROPER PLACEMENT OF HVF AND HVS AT PROJECT BOUNDARY.

LEGEND

- QUANTITY TAB NOTE
- QUANTITY TAB NOTE CONTINUED
- CULVERT
- DITCH BOTTOM
- FENCE
- GUARDRAIL
- GRAVEL EDGE
- PAVED EDGE
- BRIDGE
- RETAINING WALL
- TRAFFIC BARRIER
- BUILDINGS
- STREAM EDGE
- CLEARING AND GRUBBING BOUNDARY
- REMOVE ASPHALT CONC PAVEMENT
- GAS LINE
- WATER LINE
- ABOVEGROUND POWER
- ABOVE GROUND TELEPHONE
- UNDERGROUND FIBER OPTIC
- UNDERGROUND POWER
- UNDERGROUND TELEPHONE
- CABLE BARRIER
- ITS CONDUIT AND WIRING
- FIRE HYDRANT
- GUY ANCHOR
- GUIDE POST
- GUY POLE
- UTILITY POLE
- WATER METER BOX
- WATER VALVE
- GAS VALVE
- UTILITY BOX
- LIGHT STANDARD - SINGLE
- UNDERGROUND POWER VAULT
- POWER BOX
- POWER POLE
- TELEPHONE BOX
- TELEPHONE RISER
- UNDERGROUND CABLE BOX
- UNDERGROUND COMMUNICATION VAULT
- UNDERGROUND TELEPHONE BOX
- TREE
- TREE PROTECTION HIGH VISIBILITY FENCE
- HIGH VISIBILITY FENCE
- HIGH VISIBILITY SILT FENCE

0 50 100
SCALE IN FEET

FILE NAME	U:\PSO\Projects\Clients\1598-TulalipTribes\554-1598-095 116th-Ph4-PSE\99Svcs\CADD\DGN\PS&ESheets\BL1598033_PS_SP.dgn
TIME	4:53:36 PM
DATE	8/24/2017
PLOTTED BY	purgabut
DESIGNED BY	M. TSUN
ENTERED BY	B. PURGANAN
CHECKED BY	D. PROCTOR
APPROVED BY	H. LONGFELLOW

REVISION	DATE	BY

REGION NO.	STATE	FED.AID PROJ.NO.
10	WASH	
JOB NUMBER		
CONTRACT NO.		LOCATION NO.

P.E. STAMP BOX — DATE

HENRY DAVID LONGFELLOW, STATE OF WASHINGTON, 37902, REGISTERED PROFESSIONAL ENGINEER — DATE — P.E. STAMP BOX

TULALIP TRIBES — Parametrix

I-5 / 116TH STREET NE
INTERCHANGE IMPROVEMENTS
PHASE 4 RAMPS

SITE PREPARATION / EXISTING UTILITIES PLAN

Plot 4
PLAN REF NO
SP3
SHEET 42 OF 238 SHEETS

NOTES:

1. CLEARING AND GRUBBING LIMITS SHALL BE 5'-0" OUTSIDE OF CUT/FILL OR AS DIRECTED BY THE ENGINEER.
2. NOT USED.
3. FOR LIMITS OF TREE AND VEGETATION PROTECTION, SEE TESC PLANS.
4. SEE TEMPORARY SIGNAL PLANS FOR INTERIM LOCATION DURING CONSTRUCTION. SEE SIGNAL PLANS FOR NEW LOCATION AFTER CONSTRUCTION.
5. SEE STAGED CONSTRUCTION PLANS FOR CONSTRUCTION SEQUENCE.
6. SEE DRAINAGE SHEETS FOR REMOVING EXISTING PIPES AND STRUCTURES.
7. NO CLEARING AND GRUBBING SHALL BE PERFORMED WITHIN THE DRIP LINES OF EXISTING TREES THAT ARE OUTSIDE OF CUT AND FILL LIMITS. INSTALL AND MAINTAIN HVF AT THE DRIPLINE (10' MINIMUM FROM TRUNK) FOR ALL TREES DESIGNATED TO BE PROTECTED.
8. SEE SPECIAL PROVISIONS 1-07.16(2) AND 2-01.3 FOR ADDITIONAL TREE AND TREE ROOT PROTECTION REQUIREMENTS.
9. HVF AND HVS SHALL BE INSTALLED ALONG CG BOUNDARY AND AROUND TREES PRIOR TO CLEARING AND GRUBBING PER 1-07.16 VEGETATION PROTECTION AND RESTORATION AND 2-01.3 ROADSIDE RESTORATION SPECIAL PROVISIONS. HVF AND HVS ARE SHOWN WITH 5 FOOT OFFSET FROM CG BOUNDARY THIS SHEET FOR VISUAL PURPOSES ONLY. SEE EROSION CONTROL PLANS FOR PROPER PLACEMENT OF HVF AND HVS AT PROJECT BOUNDARY.

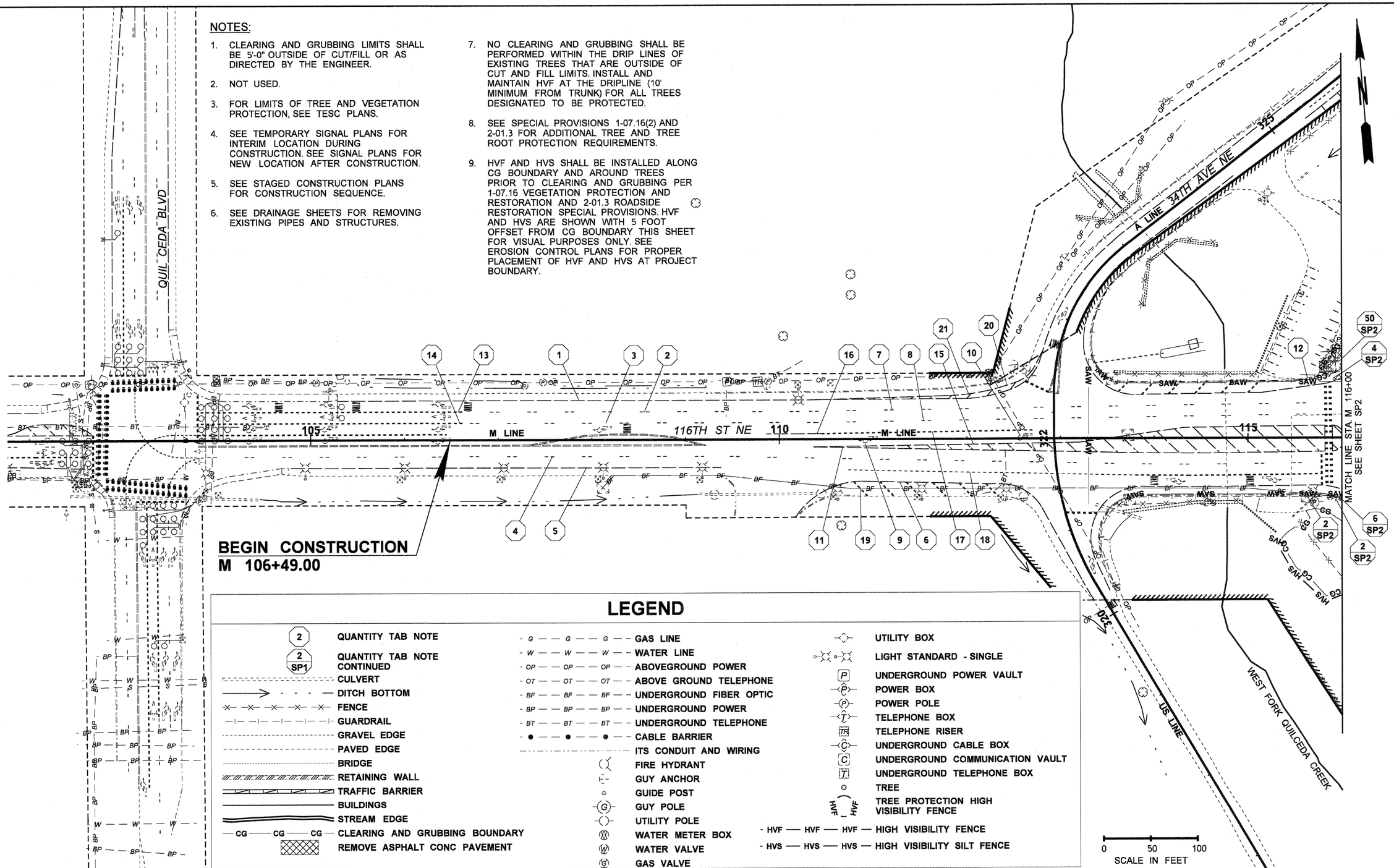

LEGEND

2	QUANTITY TAB NOTE	G	GAS LINE		UTILITY BOX
2 SP1	QUANTITY TAB NOTE CONTINUED	W	WATER LINE		LIGHT STANDARD - SINGLE
	CULVERT	OP	ABOVEGROUND POWER	P	UNDERGROUND POWER VAULT
	DITCH BOTTOM	OT	ABOVE GROUND TELEPHONE		POWER BOX
	FENCE	BF	UNDERGROUND FIBER OPTIC		POWER POLE
	GUARDRAIL	BP	UNDERGROUND POWER		TELEPHONE BOX
	GRAVEL EDGE	BT	UNDERGROUND TELEPHONE	TR	TELEPHONE RISER
	PAVED EDGE		CABLE BARRIER		UNDERGROUND CABLE BOX
	BRIDGE		ITS CONDUIT AND WIRING	C	UNDERGROUND COMMUNICATION VAULT
	RETAINING WALL		FIRE HYDRANT	T	UNDERGROUND TELEPHONE BOX
	TRAFFIC BARRIER		GUY ANCHOR		TREE
	BUILDINGS		GUIDE POST	HVF	TREE PROTECTION HIGH VISIBILITY FENCE
	STREAM EDGE	G	GUY POLE		
CG	CLEARING AND GRUBBING BOUNDARY		UTILITY POLE	HVF	HIGH VISIBILITY FENCE
	REMOVE ASPHALT CONC PAVEMENT		WATER METER BOX	HVS	HIGH VISIBILITY SILT FENCE
		W	WATER VALVE		
		G	GAS VALVE		

FILE NAME	U:\PSO\Projects\Clients\1598-TulalipTribes\554-1598-095 116th-Ph4-PSE\99Svcs\CADD\DGN\PS&ESheets\BL1598033_PS_SP.dgn
TIME	4:53:56 PM
DATE	8/24/2017
PLOTTED BY	purgabut
DESIGNED BY	M. TSUN
ENTERED BY	B. PURGANAN
CHECKED BY	D. PROCTOR
APPROVED BY	H. LONGFELLOW

REVISION	DATE	BY

REGION NO.	STATE	FED.AID PROJ.NO.
10	WASH	
JOB NUMBER		
CONTRACT NO.		LOCATION NO.

P.E. STAMP BOX — DATE

HARRY DAVID LONGFELLOW — STATE OF WASHINGTON — 37902 — REGISTERED PROFESSIONAL ENGINEER — P.E. STAMP BOX — DATE

TULALIP TRIBES — Parametrix

I-5 / 116TH STREET NE INTERCHANGE IMPROVEMENTS PHASE 4 RAMPS

SITE PREPARATION / EXISTING UTILITIES PLAN

Plot 6

PLAN REF NO SP4

SHEET 43 OF 238 SHEETS

LEGEND

2	QUANTITY TAB NOTE
2 SP1	QUANTITY TAB NOTE CONTINUED
	CULVERT
	DITCH BOTTOM
	FENCE
	GUARDRAIL
	GRAVEL EDGE
	PAVED EDGE
	BRIDGE
	RETAINING WALL
	TRAFFIC BARRIER
	BUILDINGS
	STREAM EDGE
CG	CLEARING AND GRUBBING BOUNDARY
	REMOVE ASPHALT CONC PAVEMENT
G	GAS LINE
W	WATER LINE
OP	ABOVEGROUND POWER
OT	ABOVE GROUND TELEPHONE
BF	UNDERGROUND FIBER OPTIC
BP	UNDERGROUND POWER
BT	UNDERGROUND TELEPHONE
	CABLE BARRIER
	ITS CONDUIT AND WIRING
	FIRE HYDRANT
	GUY ANCHOR
	GUIDE POST
G	GUY POLE
	UTILITY POLE
M	WATER METER BOX
W	WATER VALVE
G	GAS VALVE
	UTILITY BOX
	LIGHT STANDARD - SINGLE
P	UNDERGROUND POWER VAULT
P	POWER BOX
P	POWER POLE
T	TELEPHONE BOX
TR	TELEPHONE RISER
C	UNDERGROUND CABLE BOX
C	UNDERGROUND COMMUNICATION VAULT
T	UNDERGROUND TELEPHONE BOX
	TREE
HVF	TREE PROTECTION HIGH VISIBILITY FENCE
HVF	HIGH VISIBILITY FENCE
HVS	HIGH VISIBILITY SILT FENCE

NOTES:

1. CLEARING AND GRUBBING LIMITS SHALL BE 5'-0" OUTSIDE OF CUT/FILL OR AS DIRECTED BY THE ENGINEER.
2. NOT USED.
3. FOR LIMITS OF TREE AND VEGETATION PROTECTION, SEE TESC PLANS.
4. SEE TEMPORARY SIGNAL PLANS FOR INTERIM LOCATION DURING CONSTRUCTION. SEE SIGNAL PLANS FOR NEW LOCATION AFTER CONSTRUCTION.
5. SEE STAGED CONSTRUCTION PLANS FOR CONSTRUCTION SEQUENCE.
6. SEE DRAINAGE SHEETS FOR REMOVING EXISTING PIPES AND STRUCTURES.
7. NO CLEARING AND GRUBBING SHALL BE PERFORMED WITHIN THE DRIP LINES OF EXISTING TREES THAT ARE OUTSIDE OF CUT AND FILL LIMITS. INSTALL AND MAINTAIN HVF AT THE DRIPLINE (10' MINIMUM FROM TRUNK) FOR ALL TREES DESIGNATED TO BE PROTECTED.
8. SEE SPECIAL PROVISIONS 1-07.16(2) AND 2-01.3 FOR ADDITIONAL TREE AND TREE ROOT PROTECTION REQUIREMENTS.
9. HVF AND HVS SHALL BE INSTALLED ALONG CG BOUNDARY AND AROUND TREES PRIOR TO CLEARING AND GRUBBING PER 1-07.16 VEGETATION PROTECTION AND RESTORATION AND 2-01.3 ROADSIDE RESTORATION SPECIAL PROVISIONS. HVF AND HVS ARE SHOWN WITH 5 FOOT OFFSET FROM CG BOUNDARY THIS SHEET FOR VISUAL PURPOSES ONLY. SEE EROSION CONTROL PLANS FOR PROPER PLACEMENT OF HVF AND HVS AT PROJECT BOUNDARY.

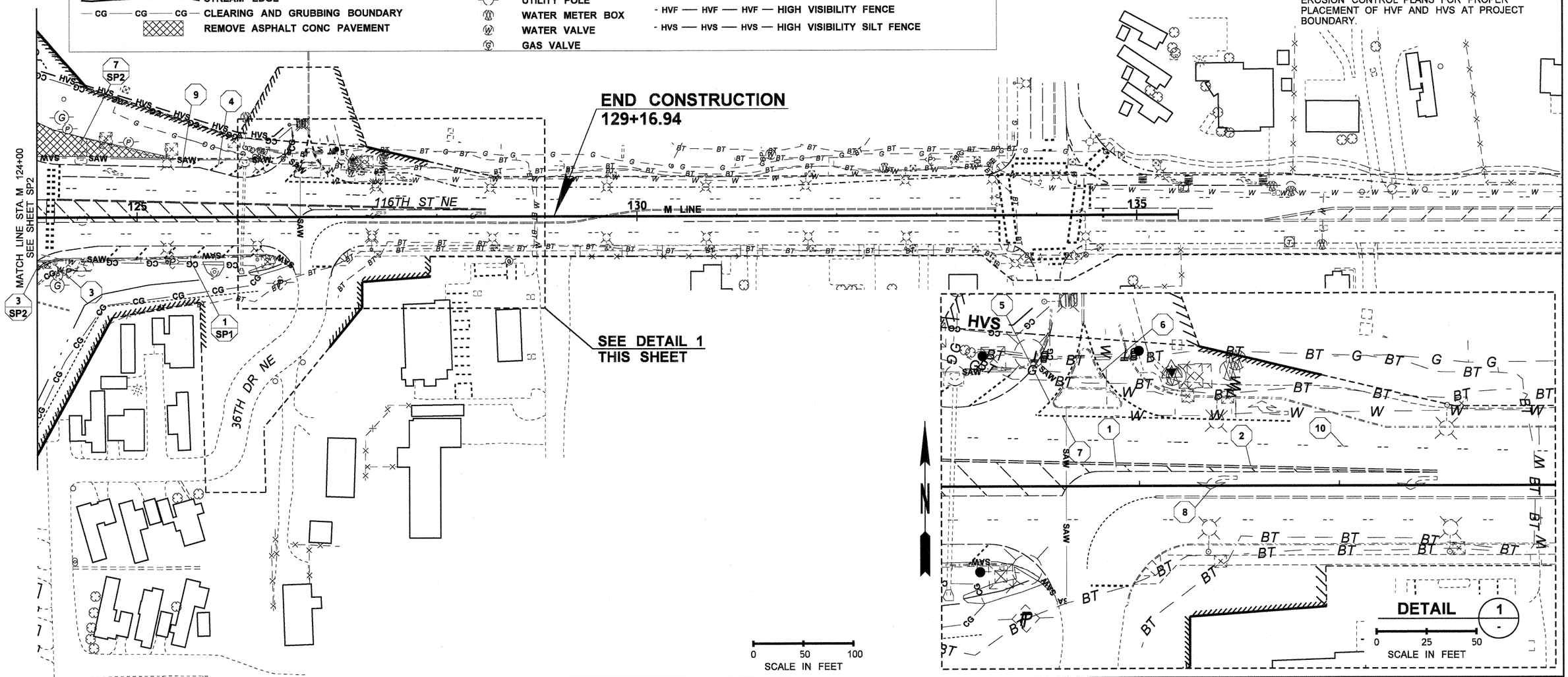

FILE NAME	U:\PSO\Projects\Clients\1598-TulalipTribes\554-1598-095 116th-Ph4-PSE\99Svcs\CADD\DGN\PS&ESheets\BL1598033_PS_SP.dgn
TIME	4:54:11 PM
DATE	8/24/2017
PLOTTED BY	purgabut
DESIGNED BY	M. TSUN
ENTERED BY	B. PURGANAN
CHECKED BY	D. PROCTOR
APPROVED BY	H. LONGFELLOW

REVISION | DATE | BY

REGION NO.	STATE	FED.AID PROJ.NO.
10	WASH	
JOB NUMBER		
CONTRACT NO.		LOCATION NO.

P.E. STAMP BOX — DATE

P.E. STAMP BOX — DATE

TULALIP TRIBES Parametrix

I-5 / 116TH STREET NE INTERCHANGE IMPROVEMENTS PHASE 4 RAMPS

SITE PREPARATION / EXISTING UTILITIES PLAN

Plot 7

PLAN REF NO SP5

SHEET 44 OF 238 SHEETS

NOTE:

* QUANTITIES SHOWN ON SHEET ARE FOR NEW ROADWAY PROFILE CHANGE. TEMPORARY WIDENING QUANTITIES AND SAWCUT WIDENING QUANTITIES ARE NOT INCLUDED.

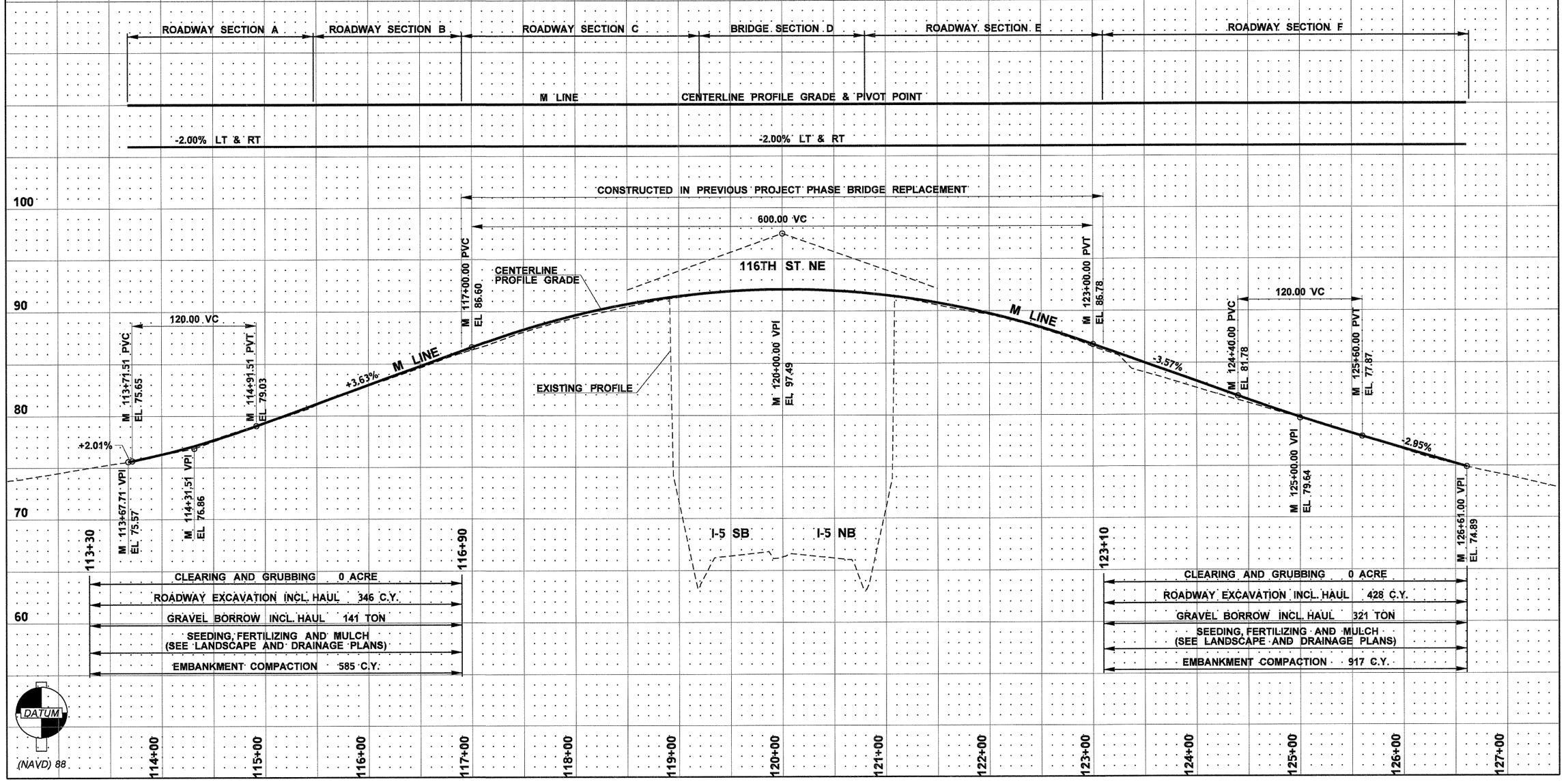

FILE NAME	U:\PSO\Projects\Clients\1598-TulalipTribes\554-1598-095 116th-Ph4-PSE\99Svcs\CADD\DGN\PS&ESheets\BL1598033_PR_RP.dgn
TIME	4:57:25 PM
DATE	8/24/2017
PLOTTED BY	purgabut
DESIGNED BY	M. TSUN
ENTERED BY	B. PURGANAN
CHECKED BY	D. PROCTOR
APPROVED BY	H. LONGFELLOW

REVISION	DATE	BY

REGION NO.	STATE	FED.AID PROJ.NO.
10	WASH	
JOB NUMBER		
CONTRACT NO.		LOCATION NO.

P.E. STAMP BOX — DATE

P.E. STAMP BOX — DATE

Parametrix

I-5 / 116TH STREET NE INTERCHANGE IMPROVEMENTS PHASE 4 RAMPS

ROADWAY PROFILES

Plot 1

PLAN REF. NO. RP1

SHEET 45 OF 238 SHEETS

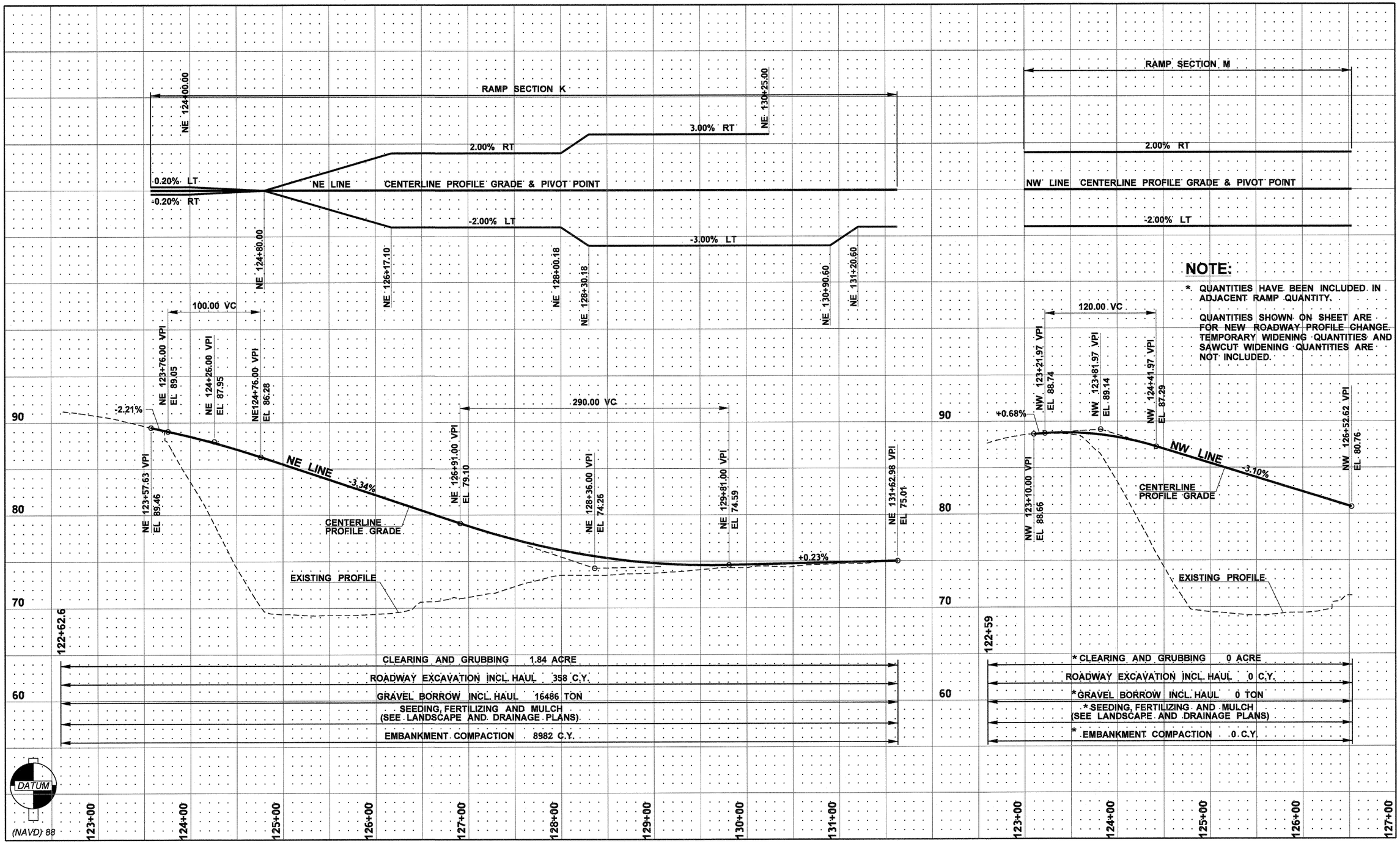

NOTE:

* QUANTITIES HAVE BEEN INCLUDED IN ADJACENT RAMP QUANTITY.

QUANTITIES SHOWN ON SHEET ARE FOR NEW ROADWAY PROFILE CHANGE. TEMPORARY WIDENING QUANTITIES AND SAWCUT WIDENING QUANTITIES ARE NOT INCLUDED.

FILE NAME	U:\PSO\Projects\Clients\1598-TulalipTribes\554-1598-095 116th-Ph4-PSE\99Svcs\CADD\DGN\PS&ESheets\BL1598033_PR_RP.dgn
TIME	4:57:47 PM
DATE	8/24/2017
PLOTTED BY	purgabut
DESIGNED BY	M. TSUN
ENTERED BY	B. PURGANAN
CHECKED BY	D. PROCTOR
APPROVED BY	H. LONGFELLOW

REVISION | DATE | BY

REGION NO. 10 | STATE WASH | FED.AID PROJ.NO.

JOB NUMBER

CONTRACT NO. | LOCATION NO.

P.E. STAMP BOX — DATE

HARRY DAVID LONGFELLOW — REGISTERED PROFESSIONAL ENGINEER — STATE OF WASHINGTON — 37902 — 9/5/17

P.E. STAMP BOX — DATE

TULALIP TRIBES — Parametrix

I-5 / 116TH STREET NE INTERCHANGE IMPROVEMENTS PHASE 4 RAMPS

ROADWAY PROFILES

Plot 2

PLAN REF. NO. RP2

SHEET 46 OF 238 SHEETS

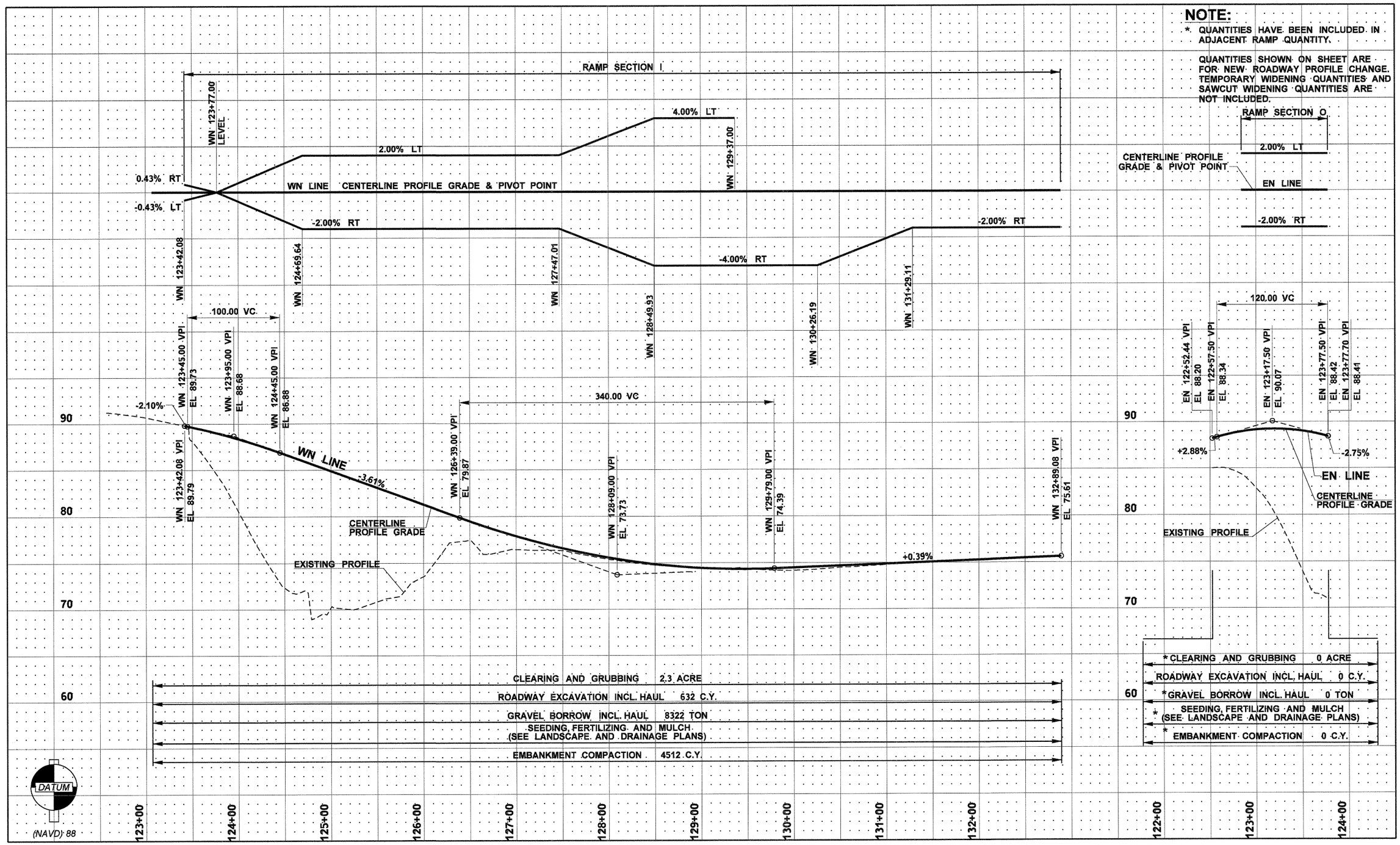

FILE NAME	U:\PSO\Projects\Clients\1598-TulalipTribes\554-1598-095 116th-Ph4-PSE\99Svcs\CADD\DGN\PS&ESheets\BL1598033_PR_RP.dgn
TIME	4:58:34 PM
DATE	8/24/2017
PLOTTED BY	purgabut
DESIGNED BY	M. TSUN
ENTERED BY	B. PURGANAN
CHECKED BY	D. PROCTOR
APPROVED BY	H. LONGFELLOW

REVISION	DATE	BY

REGION NO.	STATE	FED.AID PROJ.NO.
10	WASH	
JOB NUMBER		
CONTRACT NO.		LOCATION NO.

DATE
P.E. STAMP BOX

DATE
P.E. STAMP BOX

TULALIP TRIBES
Parametrix

I-5 / 116TH STREET NE
INTERCHANGE IMPROVEMENTS
PHASE 4 RAMPS

ROADWAY PROFILES

Plot 3
PLAN REF. NO. RP3
SHEET 47 OF 238 SHEETS

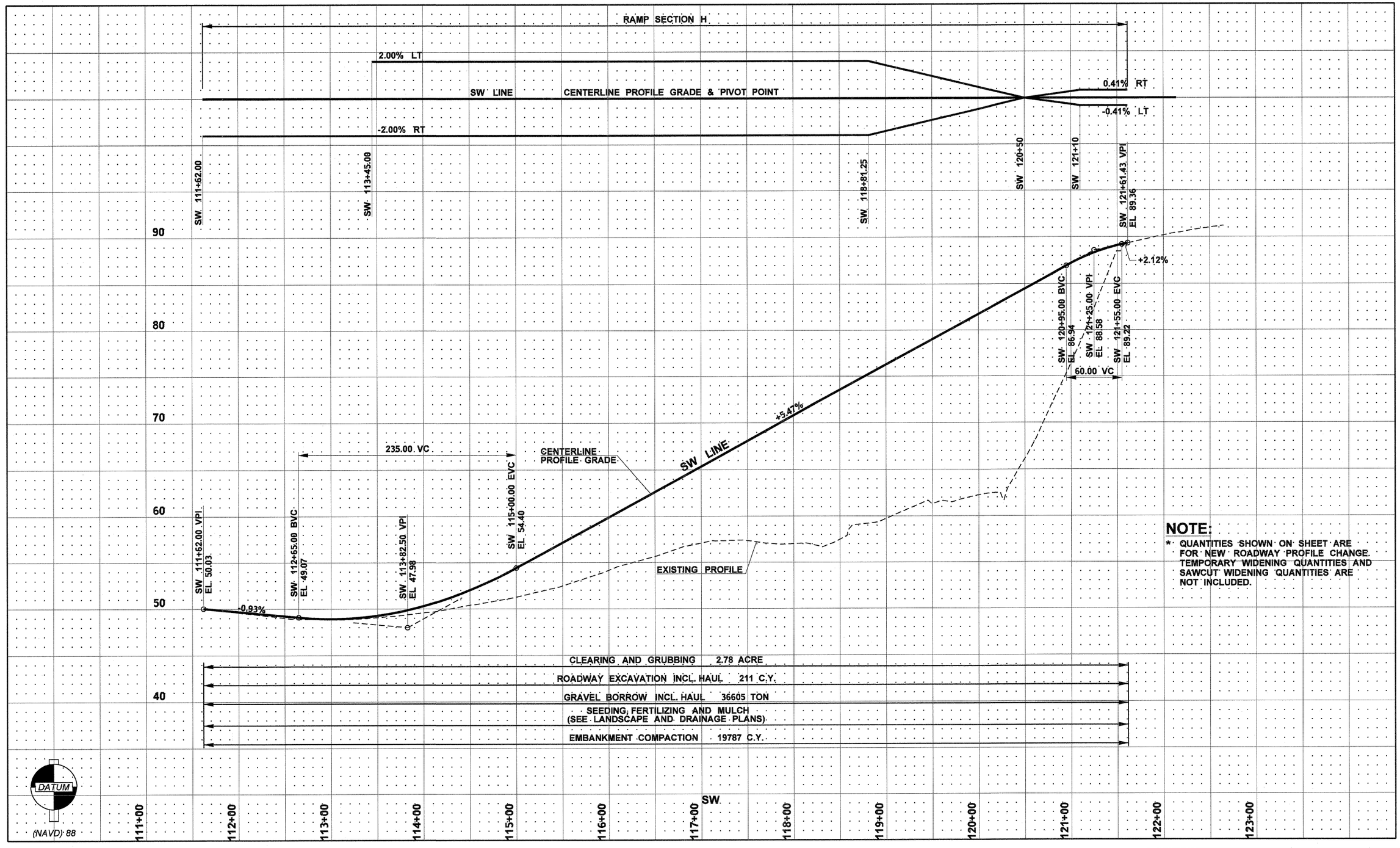

NOTE:

* QUANTITIES SHOWN ON SHEET ARE FOR NEW ROADWAY PROFILE CHANGE. TEMPORARY WIDENING QUANTITIES AND SAWCUT WIDENING QUANTITIES ARE NOT INCLUDED.

FILE NAME	U:\PSO\Projects\Clients\1598-TulalipTribes\554-1598-095 116th-Ph4-PSE\99Svcs\CADD\DGN\PS&ESheets\BL1598033_PR_RP.dgn
TIME	4:58:48 PM
DATE	8/24/2017
PLOTTED BY	purgabut
DESIGNED BY	M. TSUN
ENTERED BY	B. PURGANAN
CHECKED BY	D. PROCTOR
APPROVED BY	H. LONGFELLOW

REVISION	DATE	BY

REGION NO.	STATE	FED.AID PROJ.NO.
10	WASH	
JOB NUMBER		
CONTRACT NO.		LOCATION NO.

P.E. STAMP BOX — DATE

STATE OF WASHINGTON — DAVID LONGFELLOW — 037902 — REGISTERED PROFESSIONAL ENGINEER

P.E. STAMP BOX — DATE

TULALIP TRIBES — Parametrix

I-5 / 116TH STREET NE
INTERCHANGE IMPROVEMENTS
PHASE 4 RAMPS

ROADWAY PROFILES

Plot 4

PLAN REF. NO. RP4

SHEET 48 OF 238 SHEETS

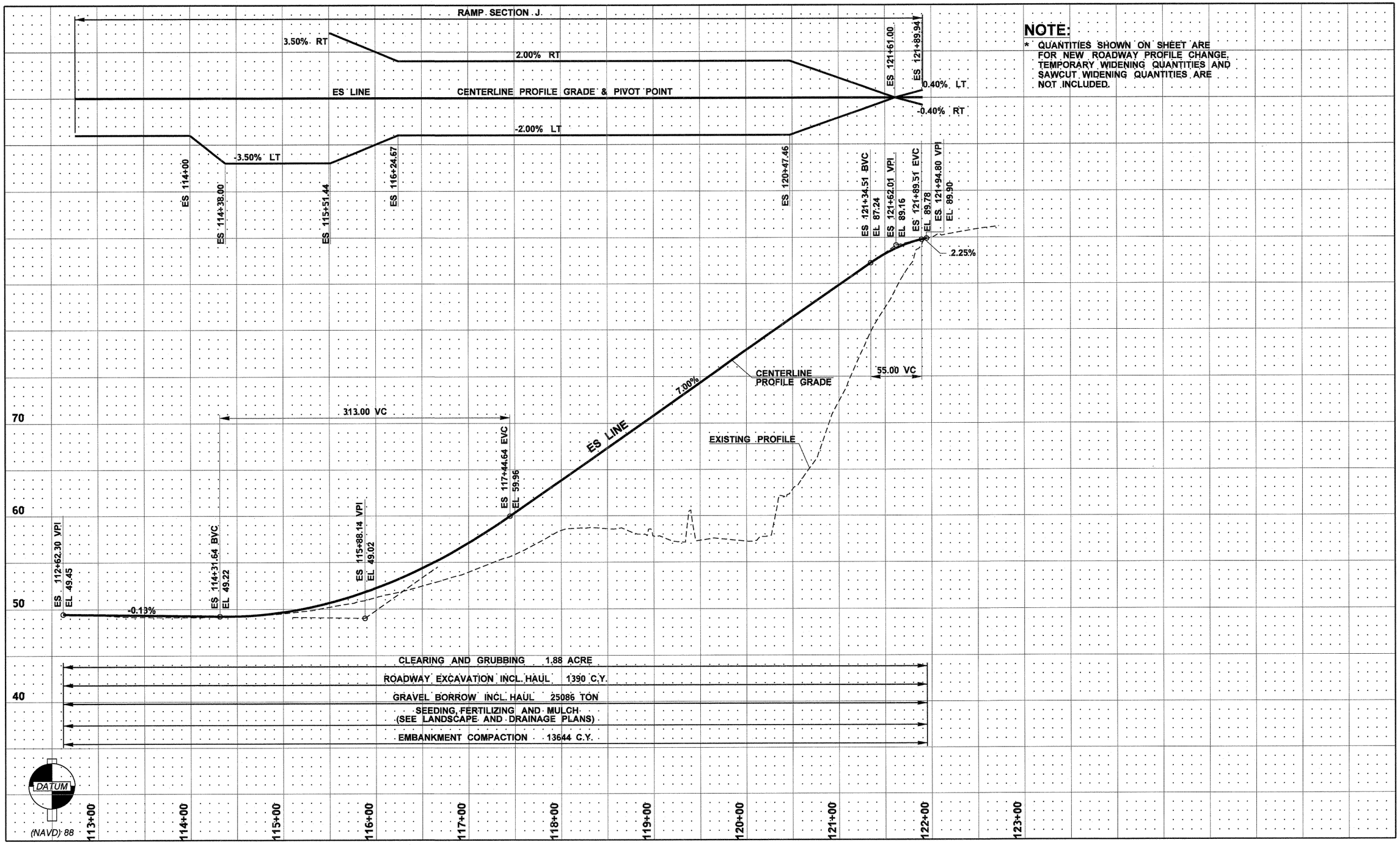

NOTE:

* QUANTITIES SHOWN ON SHEET ARE FOR NEW ROADWAY PROFILE CHANGE, TEMPORARY WIDENING QUANTITIES AND SAWCUT WIDENING QUANTITIES ARE NOT INCLUDED.

FILE NAME	U:\PSO\Projects\Clients\1598-TulalipTribes\554-1598-095 116th-Ph4-PSE\99Svcs\CADD\DGN\PS&ESheets\BL1598033_PR_RP.dgn
TIME	4:59:00 PM
DATE	8/24/2017
PLOTTED BY	purgabut
DESIGNED BY	M. TSUN
ENTERED BY	B. PURGANAN
CHECKED BY	D. PROCTOR
APPROVED BY	H. LONGFELLOW

REVISION	DATE	BY

REGION NO.	STATE	FED.AID PROJ.NO.
10	WASH	
JOB NUMBER		
CONTRACT NO.		LOCATION NO.

P.E. STAMP BOX — DATE

HARRY DAVID LONGFELLOW — STATE OF WASHINGTON — 37902 — REGISTERED PROFESSIONAL ENGINEER

P.E. STAMP BOX — DATE

TULALIP TRIBES — Parametrix

I-5 / 116TH STREET NE INTERCHANGE IMPROVEMENTS PHASE 4 RAMPS

ROADWAY PROFILES

Plot 5

PLAN REF. NO. RP5

SHEET 49 OF 238 SHEETS

NOTE:

* QUANTITIES HAVE BEEN INCLUDED IN ADJACENT RAMP QUANTITY.

QUANTITIES SHOWN ON SHEET ARE FOR NEW ROADWAY PROFILE CHANGE. TEMPORARY WIDENING QUANTITIES AND SAWCUT WIDENING QUANTITIES ARE NOT INCLUDED.

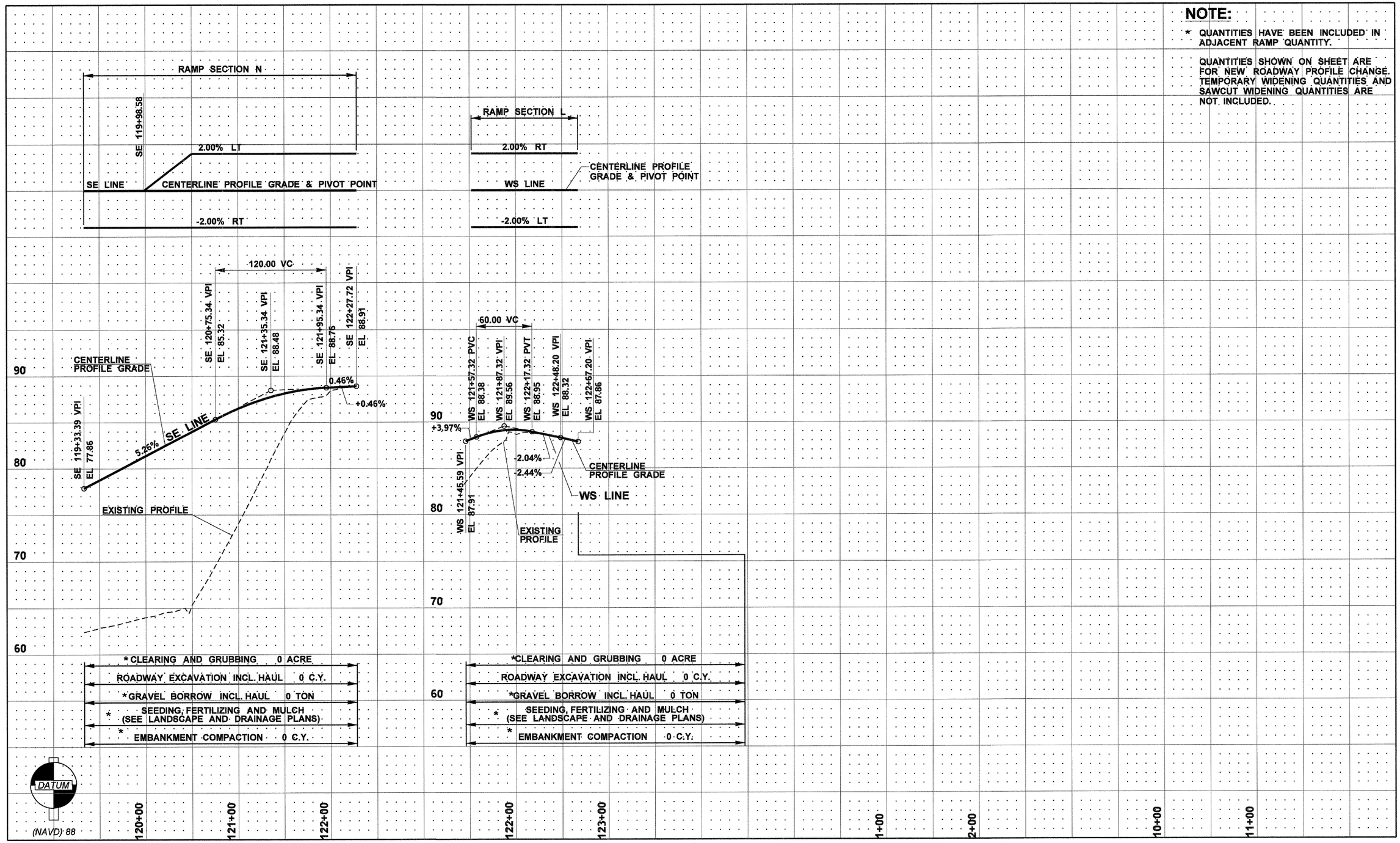

FILE NAME	U:\PSO\Projects\Clients\1598-TulalipTribes\554-1598-095 116th-Ph4-PSE\99Svcs\CADD\DGN\PS&ESheets\BL1598033_PR_RP.dgn
TIME	4:59:12 PM
DATE	8/24/2017
PLOTTED BY	purgabut
DESIGNED BY	M. TSUN
ENTERED BY	B. PURGANAN
CHECKED BY	D. PROCTOR
APPROVED BY	H. LONGFELLOW

REVISION	DATE	BY

REGION NO.	STATE	FED.AID PROJ.NO.
10	WASH	
JOB NUMBER		
CONTRACT NO.		LOCATION NO.

P.E. STAMP BOX — DATE

P.E. STAMP BOX — DATE

TULALIP TRIBES

Parametrix

I-5 / 116TH STREET NE INTERCHANGE IMPROVEMENTS PHASE 4 RAMPS

ROADWAY PROFILES

Plot 6

PLAN REF. NO. RP6

SHEET 50 OF 238 SHEETS

QUANTITY TABULATION - TEMPORARY EROSION AND SEDIMENTATION CONTROL

NOTE:
THE FIRST NUMBER OF THE "CODE" BELOW REFERS TO THE SHEET NO. OR THE SHEET REFERENCE NO. SHOWING THE CONSTRUCTION FEATURE.

THE SECOND NUMBER REFERS TO THE CONSTRUCTION FEATURE FOUND ON THAT SHEET.

CODE	LOCATION ⤵ \ UNIT OF MEASURE ➢	QUARRY SPALLS	TEMPORARY CATCH BASIN TYPE 1	CHECK DAM	INLET PROTECTION		STABILIZED CONSTRUCTION ENTRANCE			WATTLE	HIGH VISIBILITY FENCE		HIGH VISIBILITY SILT FENCE	CONSTRUCTION GEOTEXTILE FOR DITCH LINING			SEE GENERAL NOTES
		TON	EACH	L.F.	EACH		S.Y.			L.F.	L.F.		L.F.	S.Y.			
EC1A-1/1	LM 210+81 (83.4 LT)				1												5
EC1A-1/2	ES 113+37 (21.9 LT)				1												5
EC1A-1/3	ES 113+66 (27.8 LT) TO M 115+29 (101.2 RT)												995				10
EC1A-1/4	ES 116+02 (20.5 LT)				1												5
EC1A-1/5	LM 216+03 (69.7 LT)				1												5
EC1A-1/6	LM 210+99 (85.9 RT)				1												5
EC1A-1/7	LM 211+42 (114.4 RT) TO SW 113+37 (27.7 RT)												200				10
EC1A-1/8	SW 113+21 (20.7 RT)				1												5
EC1A-1/9	SW 113+60 (28.6 RT) TO SW 114+96 (50.3 RT)												145				7, 10
EC1A-1/10	SW 114+96 (50.3 RT) TO M 126+22 (58.6 RT)										220						3
EC1A-1/11	SW 115+02 (59.2 RT) TO SW 115+05 (68.7 RT)	4.2												10			9
EC1A-1/12	SW 115+25 (70.7 RT)										72						3
EC1A-1/13	SW 115+09 (22.3 RT) TO SW 116+39 (29.2 RT)						210										4
EC1A-1/14	SW 115+14 (65.7 RT) TO M 126+32 (53.8 RT)			75													2
EC1A-2/1	ES 119+01 (57.3 LT)				1												5
EC1A-2/2	ES 119+10 (63.6 LT) TO ES 120+25 (123.7 LT)						260										4
EC1A-2/3	ES 120+47 (172.6 LT)										72						3
EC1A-2/4	NW 124+38 (143.1 LT)										72						3
EC1A-2/5	NW 125+09 (101.5 LT)										72						3
EC1A-2/6	NW 125+50 (72.9 LT)										72						3
EC1A-2/7	NW 125+87 (208.8 LT) TO NW 125+61 (251.5 LT)			10													2
EC1A-2/8	NW 125+98 (165.3 LT) TO NE 131+68 (21.5 LT)										635						3
EC1A-2/9	NE 127+95 (37.9 LT) TO NE 128+91 (26.6 LT)						140										4
EC1A-2/10	SW 117+42 (74.6 RT)		1														8
EC1A-2/11	SW 118+72 (95.8 RT) TO SW 119+64 (148.4 RT)						160										4
EC1A-2/12	M 122+51 (152.9 RT)										72						3
EC1A-2/13	M 126+55 (90.1 LT) TO LM 235+15 (116.3 RT)										1,463						3
EC1A-2/14	WN 125+11 (114.4 RT) TO WN 126+10 (62.7 RT)						160										4
EC1A-2/15	WN 126+85 (30.6 RT)				1												5
EC1A-2/16	WN 126+17 (108.8 RT) TO LM 235+20 (122.2 RT)									900							1
	SHEET TOTAL	4.2	1	85	8		930			900	2,750		1,340	10			

GENERAL NOTES:

1. SEE STD PLAN I-30.30-01 FOR WATTLE DETAIL.
2. CONTRACTOR SHALL USE NON-BIODEGRADABLE, GEOTEXTILE ENCASED CHECK DAM PER STD PLANS I-50.20-01 .
3. SEE STD PLAN I-10.10-01 FOR HIGH VISIBILITY FENCE DETAIL.
4. SEE STD PLAN I-80.10-02 FOR STABILIZED CONSTRUCTION ENTRANCE DETAIL.
5. SEE STD PLAN I-40.20-00 FOR INLET PROTECTION DETAIL.
6. SEE STD PLAN I-30.10-02 FOR SILT FENCE WITH BACKUP SUPPORT DETAIL.
7. SEE STD PLAN I-30.20-00 FOR SILT FENCE PLACEMENT AT CULVERT ENDS DETAIL.
8. SEE 'TEMPORARY CATCH BASIN TYPE 1" SPECIAL PROVISIONS.
9. SEE SHEET DD5 FOR QUARRY SPALL OUTFALL PROTECTION DETAIL.
10. SEE STD PLAN I-30.16-00 FOR HIGH VISIBILITY SILT FENCE WITH BACKUP SUPPORT DETAIL.

DESIGNED BY	C. BUITRAGO					REGION NO.	STATE
ENTERED BY	T. NABOURS					10	WASH
CHECKED BY	D. PROCTOR					JOB NUMBER	
APPROVED BY	H. LONGFELLOW					CONTRACT NO.	
		DATE	DATE	REVISION	BY		

FED. AID PROJ. NO.

TULALIP TRIBES ©
Parametrix

I-5 / 116TH STREET NE
INTERCHANGE IMPROVEMENTS
PHASE 4 RAMPS

QUANTITY TABULATION - TEMPORARY EROSION AND SEDIMENTATION CONTROL - STAGE 1A

QEC1A-1

SHEET 51 OF 238 SHEETS

QUANTITY TABULATION - TEMPORARY EROSION AND SEDIMENTATION CONTROL

NOTE:
THE FIRST NUMBER OF THE "CODE" BELOW REFERS TO THE SHEET NO. OR THE SHEET REFERENCE NO. SHOWING THE CONSTRUCTION FEATURE.

THE SECOND NUMBER REFERS TO THE CONSTRUCTION FEATURE FOUND ON THAT SHEET.

CODE	LOCATION ⤵ \ UNIT OF MEASURE ➢	QUARRY SPALLS	TEMPORARY CATCH BASIN TYPE 1	CHECK DAM	INLET PROTECTION		STABILIZED CONSTRUCTION ENTRANCE			WATTLE	HIGH VISIBILITY FENCE		HIGH VISIBILITY SILT FENCE	CONSTRUCTION GEOTEXTILE FOR DITCH LINING			SEE GENERAL NOTES
		TON	EACH	L.F.	EACH		S.Y.			L.F.	L.F.		L.F.	S.Y.			
EC1A-4/1	M 113+32 (80.6 LT)				1												5
EC1A-4/2	M 113+37 (66.5 LT)				1												5
EC1A-4/3	M 113+72 (55.6 LT)				1												5
EC1A-4/4	M 113+72 (0.6 LT)				1												5
EC1A-4/5	M 113+34 (70.4 RT)				1												5
EC1A-4/6	M 113+72 (61.3 RT)				1												5
EC1A-4/7	M 115+74 (59.0 RT)				1												5
	SHEET TOTAL				7												
	STAGE TOTAL	4.2	1	85	15		930			900	2750		1340	10			

GENERAL NOTES:

1. SEE STD PLAN I-30.30-01 FOR WATTLE DETAIL.
2. CONTRACTOR SHALL USE NON-BIODEGRADABLE, GEOTEXTILE ENCASED CHECK DAM PER STD PLANS I-50.20-01 .
3. SEE STD PLAN I-10.10-01 FOR HIGH VISIBILITY FENCE DETAIL.
4. SEE STD PLAN I-80.10-02 FOR STABILIZED CONSTRUCTION ENTRANCE DETAIL.
5. SEE STD PLAN I-40.20-00 FOR INLET PROTECTION DETAIL.
6. SEE STD PLAN I-30.10-02 FOR SILT FENCE WITH BACKUP SUPPORT DETAIL.
7. SEE STD PLAN I-30.20-00 FOR SILT FENCE PLACEMENT AT CULVERT ENDS DETAIL.
8. SEE 'TEMPORARY CATCH BASIN TYPE 1" SPECIAL PROVISIONS.
9. SEE SHEET DD5 FOR QUARRY SPALL OUTFALL PROTECTION DETAIL.
10. SEE STD PLAN I-30.16-00 FOR HIGH VISIBILITY SILT FENCE WITH BACKUP SUPPORT DETAIL.

DESIGNED BY	C. BUITRAGO						
ENTERED BY	T. NABOURS						
CHECKED BY	D. PROCTOR						
APPROVED BY	H. LONGFELLOW						
		DATE	DATE	REVISION	BY		

REGION NO.	STATE	FED. AID PROJ. NO.
10	WASH	
JOB NUMBER		
CONTRACT NO.		

TULALIP TRIBES ©
Parametrix

I-5 / 116TH STREET NE
INTERCHANGE IMPROVEMENTS
PHASE 4 RAMPS

QUANTITY TABULATION - TEMPORARY EROSION AND SEDIMENTATION CONTROL - STAGE 1A

QEC1A-2

SHEET 52 OF 238 SHEETS

QUANTITY TABULATION - TEMPORARY EROSION AND SEDIMENTATION CONTROL

NOTE:
THE FIRST NUMBER OF THE "CODE" BELOW REFERS TO THE SHEET NO. OR THE SHEET REFERENCE NO. SHOWING THE CONSTRUCTION FEATURE.

THE SECOND NUMBER REFERS TO THE CONSTRUCTION FEATURE FOUND ON THAT SHEET.

CODE	LOCATION ⤵ \ UNIT OF MEASURE ➢	QUARRY SPALLS			INLET PROTECTION		STABILIZED CONSTRUCTION ENTRANCE			COMPOST SOCK				CONSTRUCTION GEOTEXTILE FOR DITCH LINING			SEE GENERAL NOTES
		TON			EACH		S.Y.			L.F.				S.Y.			
EC1B-1/1	LM 215+25 (76.8 RT)				1												5
EC1B-1/2	LM 215+63 (88.5 RT) TO LM 218+29 (69.3 RT)									267							1
EC1B-1/3	LM 216+21 (94.6 RT) TO LM 219+14 (74.7 RT)									307							1
EC1B-1/4	LM 216+70 (101.3 RT) TO LM 219+42 (81.3 RT)									273							1
EC1B-2/1	LM 217+13 (81.3 LT) TO LM 220+07 (70.8 LT)									294							1
EC1B-2/2	ES 118+13 (21.2 RT)				1												5
EC1B-2/3	LM 217+72 (89.2 LT) TO LM 220+66 (78.6 LT)									294							1
EC1B-2/4	LM 218+90 (95.0 LT) TO LM 221+07 (78.8 LT)									218							1
EC1B-2/5	LM 219+49 (102.9 LT) TO LM 221+24 (85.3 LT)									193							1
EC1B-2/6	LM 220+08 (110.8 LT) TO LM 221+53 (87.9 LT)									148							1
EC1B-2/7	LM 220+69 (118.3 LT) TO LM 221+27 (104.2 LT)									83							1
EC1B-2/8	LM 220+39 (66.7 LT)				1												5
EC1B-2/9	ES 121+47 (1.8 RT)				1												5
EC1B-2/10	LM 221+70 (66.7 LT)				1												5
EC1B-2/11	ES 120+22 (84.6 LT) TO ES 120+80 (138.3 LT)						140										4
ECBA-2/12	M 118+36 (45.4 RT)				1												5
EC1B-2/13	M 117+34 (57.5 RT)				1												5
EC1B-2/14	M 116+70 (57.5 RT)				1												5
EC1B-2/15	M 116+47 (4.5 LT)				1												5
EC1B-2/16	M 116+44 (59.5 LT)				1												5
EC1B-2/17	M 117+37 (74.3 LT)				1												5
EC1B-2/18	M 118+13 (42.1 LT)				1												5
EC1B-2/19	NW 124+23 (19.0 RT)				1												5
EC1B-2/20	NW 125+49 (87.9 LT) TO NW 126+24 (46.3 LT)						200										4
EC1B-2/21	NW 126+05 (179.5 LT)	4.2												10			9
EC1B-2/22	LM 223+93 (66.3 LT)				1												5
EC1B-2/23	NE 124+20 (2.5 LT)				1												5
EC1B-2/24	LM 224+91 (66.7 LT)				1												5
EC1B-2/25	LM 224+14 (84.7 LT) TO LM 225+55 (130.1 LT)									150							1
EC1B-2/26	LM 224+39 (87.9 LT) TO LM 226+70 (117.8 LT)									241							1
EC1B-2/27	LM 224+62 (85.8 LT) TO LM 228+11 (94.9 LT)									354							1
EC1B-2/28	LM 224+66 (76.6 LT) TO LM 228+16 (84.5 LT)									354							1
EC1B-2/29	LM 217+18 (108.0 RT) TO LM 219+86 (82.5 RT)									270							1
EC1B-2/30	LM 217+77 (114.1 RT) TO LM 220+21 (79.0 RT)									249							1
	SHEET TOTAL	4.2			16		340			3695				10			

GENERAL NOTES:

1. SEE STD PLAN I-30.40-01 FOR COMPOST SOCK DETAIL. SEE SPECIAL PROVISIONS FOR SOCK FABRIC MATERIAL REQUIREMENTS.
2. CONTRACTOR SHALL USE NON-BIODEGRADABLE, GEOTEXTILE ENCASED CHECK DAM PER STD PLANS I-50.20-01 .
3. SEE STD PLAN I-10.10-01 FOR HIGH VISIBILITY FENCE DETAIL.
4. SEE STD PLAN I-80.10-02 FOR STABILIZED CONSTRUCTION ENTRANCE DETAIL.
5. SEE STD PLAN I-40.20-00 FOR INLET PROTECTION DETAIL.
6. SEE STD PLAN I-30.10-02 FOR SILT FENCE WITH BACKUP SUPPORT DETAIL.
7. SEE STD PLAN I-30.20-00 FOR SILT FENCE PLACEMENT AT CULVERT ENDS DETAIL.
8. SEE 'TEMPORARY CATCH BASIN TYPE 1" SPECIAL PROVISIONS.
9. SEE SHEET DD5 FOR QUARRY SPALL OUTFALL PROTECTION DETAIL.
10. SEE STD PLAN I-30.16-00 FOR HIGH VISIBILITY SILT FENCE WITH BACKUP SUPPORT DETAIL.

		DATE	DATE	REVISION	BY
DESIGNED BY	C. BUITRAGO				
ENTERED BY	T. NABOURS				
CHECKED BY	D. PROCTOR				
APPROVED BY	H. LONGFELLOW				

REGION NO.	STATE	FED. AID PROJ. NO.
10	WASH	
JOB NUMBER		
CONTRACT NO.		

TULALIP TRIBES ©
Parametrix

I-5 / 116TH STREET NE
INTERCHANGE IMPROVEMENTS
PHASE 4 RAMPS

QUANTITY TABULATION - TEMPORARY EROSION AND SEDIMENTATION CONTROL - STAGE 1B

QEC1B-1

QUANTITY TABULATION - TEMPORARY EROSION AND SEDIMENTATION CONTROL

NOTE:
THE FIRST NUMBER OF THE "CODE" BELOW REFERS TO THE SHEET NO. OR THE SHEET REFERENCE NO. SHOWING THE CONSTRUCTION FEATURE.

THE SECOND NUMBER REFERS TO THE CONSTRUCTION FEATURE FOUND ON THAT SHEET.

CODE	LOCATION ⤵ \ UNIT OF MEASURE ➢	QUARRY SPALLS			INLET PROTECTION		STABILIZED CONSTRUCTION ENTRANCE			COMPOST SOCK				CONSTRUCTION GEOTEXTILE FOR DITCH LINING			SEE GENERAL NOTES
		TON			EACH		S.Y.			L.F.				S.Y.			
EC1B-2/31	LM 218+22 (121.0 RT) TO LM 220+33 (86.8 RT)									219							1
EC1B-2/32	LM 218+84 (126.8 RT) TO LM 220+74 (77.6 RT)									220							1
EC1B-2/33	LM 219+58 (131.8 RT) TO LM 220+92 (80.6 RT)									151							1
EC1B-2/34	LM 220+01 (128.7 RT) TO LM 221+08 (81.9 RT)									123							1
EC1B-2/35	LM 220+06 (66.7 RT)				1												5
EC1B-2/36	LM 221+36 (66.7 RT)				1												5
EC1B-2/37	SW 121+02 (2.3 LT)				1												5
EC1B-2/38	SW 119+22 (62.3 RT)				1												5
EC1B-2/39	SW 119+23 (44.3 RT)				1												5
EC1B-2/40	SW 119+21 (75.8 RT) TO SW 119+92 (125.8 RT)						150										4
EC1B-2/41	SE 121+03 (18.5 RT)				1												5
EC1B-2/42	M 121+71 (45.9 RT)				1												5
EC1B-2/43	M 123+81 (57.5 LT)				1												5
EC1B-2/44	M 123+07 (57.5 LT)				1												5
EC1B-2/45	M 121+64 (45.8 LT)				1												5
EC1B-2/46	LM 223+62 (66.7 RT)				1												5
EC1B-2/47	LM 224+84 (66.7 RT)				1												5
EC1B-2/48	LM 224+49 (84.8 RT) TO LM 228+01 (77.7 RT)									354							1
EC1B-2/49	LM 224+16 (80.2 RT) TO LM 227+41 (89.8 RT)									329							1
EC1B-2/50	LM 223+91 (81.9 RT) TO LM 226+22 (103.5 RT)									250							1
EC1B-2/51	LM 223+62 (79.7 RT) TO LM 224+44 (114.9 RT)									89							1
EC1B-2/52	WN 123+87 (2.8 LT)				1												5
EC1B-2/53	WN 124+08 (2.8 LT)				1												5
EC1B-2/54	WN 124+29 (3.2 LT)				1												5
EC1B-2/55	WN 124+33 (44.6 RT)				1												5
EC1B-2/56	WN 124+31 (163.8 RT) TO WN 124+80 (99.2 RT)						280										4
EC1B-2/57	WN 125+49 (40.1 RT)				1												5
EC1B-2/58	LM 226+46 (84.8' RT)	4.2												10			9
	SHEET TOTAL	4.2			17		430			1735				10			

GENERAL NOTES:

1. SEE STD PLAN I-30.40-01 FOR COMPOST SOCK DETAIL. SEE SPECIAL PROVISIONS FOR SOCK FABRIC MATERIAL REQUIREMENTS.
2. CONTRACTOR SHALL USE NON-BIODEGRADABLE, GEOTEXTILE ENCASED CHECK DAM PER STD PLANS I-50.20-01 .
3. SEE STD PLAN I-10.10-01 FOR HIGH VISIBILITY FENCE DETAIL.
4. SEE STD PLAN I-80.10-02 FOR STABILIZED CONSTRUCTION ENTRANCE DETAIL.
5. SEE STD PLAN I-40.20-00 FOR INLET PROTECTION DETAIL.
6. SEE STD PLAN I-30.10-02 FOR SILT FENCE WITH BACKUP SUPPORT DETAIL.
7. SEE STD PLAN I-30.20-00 FOR SILT FENCE PLACEMENT AT CULVERT ENDS DETAIL.
8. SEE 'TEMPORARY CATCH BASIN TYPE 1" SPECIAL PROVISIONS.
9. SEE SHEET DD5 FOR QUARRY SPALL OUTFALL PROTECTION DETAIL.
10. SEE STD PLAN I-30.16-00 FOR HIGH VISIBILITY SILT FENCE WITH BACKUP SUPPORT DETAIL.

DESIGNED BY	C. BUITRAGO				
ENTERED BY	T. NABOURS				
CHECKED BY	D. PROCTOR				
APPROVED BY	H. LONGFELLOW				
		DATE	DATE	REVISION	BY

REGION NO.	STATE	FED. AID PROJ. NO.
10	WASH	
JOB NUMBER		
CONTRACT NO.		

TULALIP TRIBES
Parametrix

I-5 / 116TH STREET NE
INTERCHANGE IMPROVEMENTS
PHASE 4 RAMPS

QUANTITY TABULATION - TEMPORARY EROSION AND SEDIMENTATION CONTROL - STAGE 1B

QEC1B-2

QUANTITY TABULATION - TEMPORARY EROSION AND SEDIMENTATION CONTROL

NOTE:
THE FIRST NUMBER OF THE "CODE" BELOW REFERS TO THE SHEET NO. OR THE SHEET REFERENCE NO. SHOWING THE CONSTRUCTION FEATURE.

THE SECOND NUMBER REFERS TO THE CONSTRUCTION FEATURE FOUND ON THAT SHEET.

CODE	LOCATION ⤵ \ UNIT OF MEASURE ➢	QUARRY SPALLS			INLET PROTECTION		STABILIZED CONSTRUCTION ENTRANCE			COMPOST SOCK				CONSTRUCTION GEOTEXTILE FOR DITCH LINING			SEE GENERAL NOTES
		TON			EACH		S.Y.			L.F.				S.Y.			
EC1B-3/1	M 124+44 (57.5 LT)				1												5
EC1B-3/2	M 125+77 (53.3 LT)				1												5
EC1B-3/3	M 124+45 (2.9 RT)				1												5
EC1B-3/4	M 124+46 (37.7 RT)				1												5
EC1B-3/5	M 125+43 (36.9 RT)				1												5
EC1B-3/6	M 124+58 (66.1 RT)	4.2												10			9
	SHEET TOTAL	4.2			5									10			
	STAGE TOTAL	12.6			38		770			5,430				30			

GENERAL NOTES:

1. SEE STD PLAN I-30.40-01 FOR COMPOST SOCK DETAIL. SEE SPECIAL PROVISIONS FOR SOCK FABRIC MATERIAL REQUIREMENTS.
2. CONTRACTOR SHALL USE NON-BIODEGRADABLE, GEOTEXTILE ENCASED CHECK DAM PER STD PLANS I-50.20-01 .
3. SEE STD PLAN I-10.10-01 FOR HIGH VISIBILITY FENCE DETAIL.
4. SEE STD PLAN I-80.10-02 FOR STABILIZED CONSTRUCTION ENTRANCE DETAIL.
5. SEE STD PLAN I-40.20-00 FOR INLET PROTECTION DETAIL.
6. SEE STD PLAN I-30.10-02 FOR SILT FENCE WITH BACKUP SUPPORT DETAIL.
7. SEE STD PLAN I-30.20-00 FOR SILT FENCE PLACEMENT AT CULVERT ENDS DETAIL.
8. SEE 'TEMPORARY CATCH BASIN TYPE 1" SPECIAL PROVISIONS.
9. SEE SHEET DD5 FOR QUARRY SPALL OUTFALL PROTECTION DETAIL.
10. SEE STD PLAN I-30.16-00 FOR HIGH VISIBILITY SILT FENCE WITH BACKUP SUPPORT DETAIL.

DESIGNED BY	C. BUITRAGO				
ENTERED BY	T. NABOURS				
CHECKED BY	D. PROCTOR				
APPROVED BY	H. LONGFELLOW				
		DATE	DATE	REVISION	BY

REGION NO.	STATE	FED. AID PROJ. NO.
10	WASH	
JOB NUMBER		
CONTRACT NO.		

TULALIP TRIBES
Parametrix

I-5 / 116TH STREET NE
INTERCHANGE IMPROVEMENTS
PHASE 4 RAMPS

QUANTITY TABULATION - TEMPORARY EROSION AND SEDIMENTATION CONTROL - STAGE 1B

QEC1B-3

SHEET 55 OF 238 SHEETS

QUANTITY TABULATION - TEMPORARY EROSION AND SEDIMENTATION CONTROL

NOTE:
THE FIRST NUMBER OF THE "CODE" BELOW REFERS TO THE SHEET NO. OR THE SHEET REFERENCE NO. SHOWING THE CONSTRUCTION FEATURE.

THE SECOND NUMBER REFERS TO THE CONSTRUCTION FEATURE FOUND ON THAT SHEET.

CODE	LOCATION ⤵ \ UNIT OF MEASURE ➢	INLET PROTECTION	STABILIZED CONSTRUCTION ENTRANCE	SEE GENERAL NOTES
		EACH	S.Y.	
EC2-1/1	LM 216+03 (62.5 LT)	1		2
EC2-1/2	LM 214+75 (62.9 RT)	1		2
EC2-2/1	LM 217+24 (62.6 RT)	1		2
EC2-2/2	LM 218+13 (62.8 LT)	1		2
EC2-2/3	M 116+67 (73.0 RT) TO M 117+90 (82.0 RT)		290	1
EC2-2/4	M 122+37 (64.3 RT) TO M 123+37 (56.5 RT)		230	1
	STAGE TOTAL	4	520	

GENERAL NOTES:

1. SEE STD PLAN I-80.10-02 FOR STABILIZED CONSTRUCTION ENTRANCE DETAIL.
2. SEE STD PLAN I-40.20-00 FOR INLET PROTECTION DETAIL.

		DATE	DATE	REVISION	BY
DESIGNED BY	C. BUITRAGO				
ENTERED BY	T. NABOURS				
CHECKED BY	D. PROCTOR				
APPROVED BY	H. LONGFELLOW				

REGION NO.	STATE	FED. AID PROJ. NO.
10	WASH	

JOB NUMBER

CONTRACT NO.

TULALIP TRIBES ©
Parametrix

I-5 / 116TH STREET NE
INTERCHANGE IMPROVEMENTS
PHASE 4 RAMPS

QUANTITY TABULATION - TEMPORARY EROSION AND SEDIMENTATION CONTROL - STAGE 2

QEC2-1

QUANTITY TABULATION - TEMPORARY EROSION AND SEDIMENTATION CONTROL

NOTE:
THE FIRST NUMBER OF THE "CODE" BELOW REFERS TO THE SHEET NO. OR THE SHEET REFERENCE NO. SHOWING THE CONSTRUCTION FEATURE.

THE SECOND NUMBER REFERS TO THE CONSTRUCTION FEATURE FOUND ON THAT SHEET.

CODE	LOCATION ⤵ \ UNIT OF MEASURE ⤷	QUARRY SPALLS	STABILIZED CONSTRUCTION ENTRANCE	CONSTRUCTION GEOTEXTILE FOR DITCH LINING	SEE GENERAL NOTES
		TON	S.Y.	S.Y.	
EC3-1/1	M 116+11 (61.5 RT) TO 116+93 (61.5 RT)		240		1
EC3-1/2	M 116+15 (61.1 LT) TO M 116+90 (69.2 LT)		250		1
EC3-1/3	M 123+15 (46.1 RT) TO 123+85 (44.3 RT)		240		1
EC3-1/4	M 122+93 (61.2 LT) TO M 123+64 (61.1 LT)		240		1
EC3-1/5	WN 127+89 (87.6' RT)	4.2		10	2
	STAGE TOTAL	4.2	970	10	

GENERAL NOTES:

1. SEE STD PLAN I-80.10-02 FOR STABILIZED CONSTRUCTION ENTRANCE DETAIL.

2. SEE SHEET DD5 FOR QUARRY SPALL OUTFALL PROTECTION DETAIL.

DESIGNED BY	C. BUITRAGO			
ENTERED BY	T. NABOURS			
CHECKED BY	D. PROCTOR			
APPROVED BY	H. LONGFELLOW			
		DATE	DATE	REVISION	BY

REGION NO.	STATE	FED. AID PROJ. NO.
10	WASH	
JOB NUMBER		
CONTRACT NO.		

TULALIP TRIBES
Parametrix

I-5 / 116TH STREET NE
INTERCHANGE IMPROVEMENTS
PHASE 4 RAMPS

QUANTITY TABULATION - TEMPORARY EROSION AND SEDIMENTATION CONTROL - STAGE 3

QEC3-1

CONSTRUCTION NOTES:

1. TEMPORARY STORMWATER TREATMENT TANKS. TANKS SHALL REMAIN IN USE UNTIL CONSTRUCTION IS COMPLETED AND VEGETATION IS ESTABLISHED IN COMPOST AMENDED BIOFILTRATION SWALE (CABS) AND INFILTRATION PONDS.
2. PUMP OR GRAVITY DRAIN EXISTING DRAINAGE OR DISCHARGE FROM TEMPORARY TREATMENT TANKS TO TEMPORARY OUTFALL.
3. PUMP STORMWATER TO TEMPORARY STORMWATER TREATMENT TANKS. PUMP LOCATION AND TYPE TO BE DETERMINED BY CONTRACTOR AND TANK SUPPLIER. SEE SHEET TD1 FOR PUMP DETAIL AND SIZING.
4. REVISED LOCATION FROM PREVIOUS CONSTRUCTION STAGE.
5. RESTORE EMBANKMENT VEGETATION AFTER STAGE OF CONSTRUCTION IS COMPLETE. SEE LANDSCAPE PLANS FOR PLANTING DETAILS.
6. PROTECT TREE

GENERAL NOTES:

1. INSTALL SILT FENCE, WATTLES AND COMPOST SOCKS ALONG CONTOURS.
2. ALL BMPS, WITH THE EXCEPTION OF COMPOST SOCKS, SHALL BE REMOVED WHEN PROJECT IS COMPLETED AND SITE IS STABILIZED. COMPOST SOCKS SHALL REMAIN IN PLACE AFTER COMPLETION OF PROJECT.
3. TEMPORARY STORMWATER TREATMENT TANKS, PUMPS AND HOSES WILL BE PAID UNDER EROSION/WATER POLLUTION CONTROL FORCE ACCOUNT.
4. NO CLEARING AND GRUBBING SHALL BE PERFORMED WITHIN THE DRIP LINES OF EXISTING TREES THAT ARE OUTSIDE OF CUT AND FILL LIMITS. INSTALL AND MAINTAIN HVF AT THE DRIPLINE (10' MINIMUM FROM TRUNK) FOR ALL TREES DESIGNATED TO BE PROTECTED.
5. SEE SPECIAL PROVISIONS 1-07.16(2) AND 2-01.3 FOR ADDITIONAL TREE AND TREE ROOT PROTECTION REQUIREMENTS.

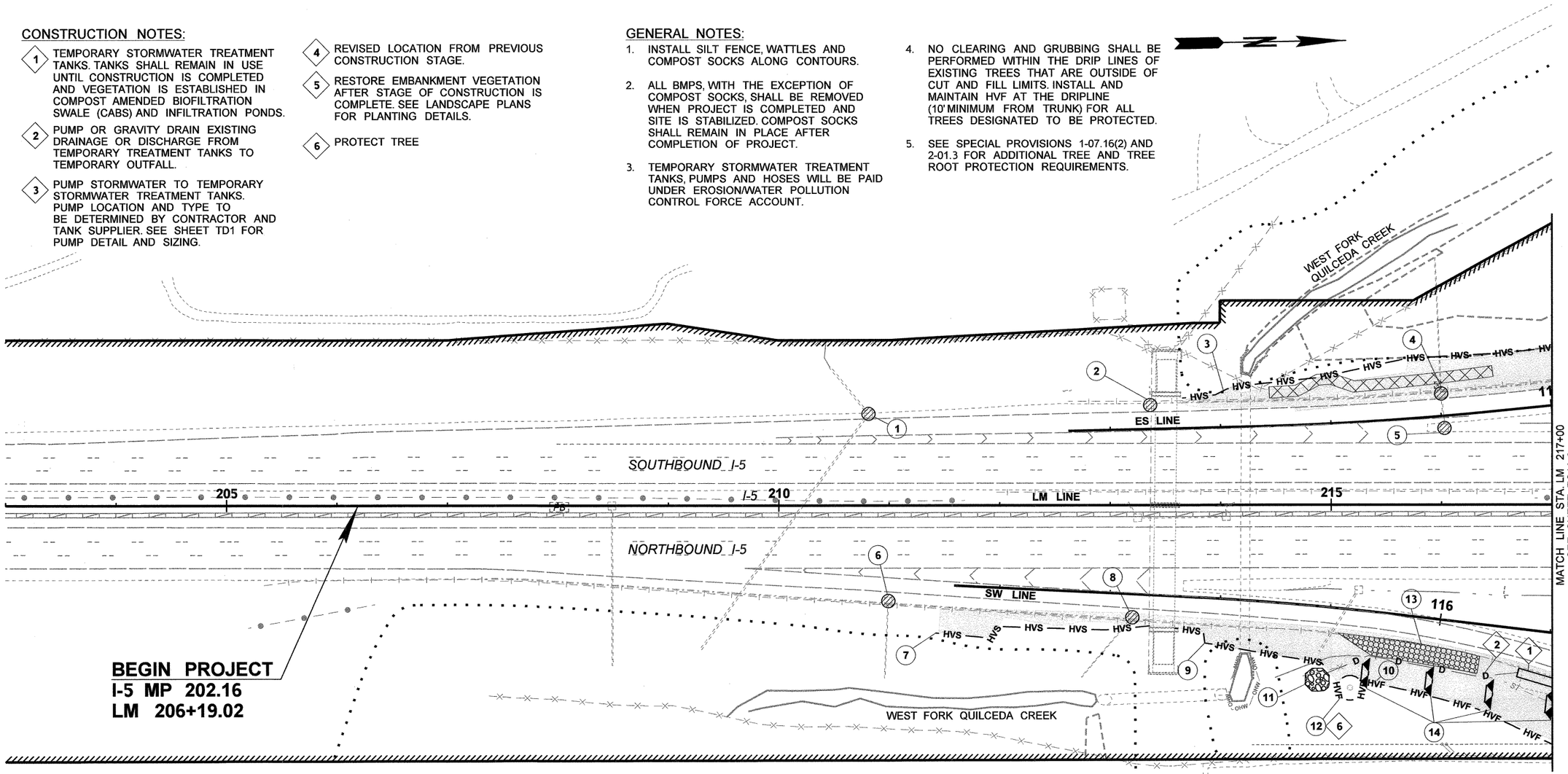

LEGEND

- HVF — HVF — HIGH VISIBILITY FENCE
- HVS — HVS — HIGH VISIBILITY SILT FENCE
- SF — SF — SILT FENCE
- INLET PROTECTION
- EXISTING DITCH
- CHECK DAM
- WATTLE
- COMPOST SOCK
- D — D — TEMPORARY DRAIN PIPE
- BUFFER
- WORK AREA
- STABILIZED CONSTRUCTION ENTRANCE
- (1) QUANTITY TABULATION NOTE
- (2) EC1A-1 QUANTITY TABULATION NOTE CONTINUED
- LIMIT CONSTRUCTION ACCESS TO PROTECT FUTURE INFILTRATION BMP FOOTPRINT FROM SEDIMENT AND COMPACTION.

0 50 100
SCALE IN FEET

FILE NAME	U:\PSO\Projects\Clients\1598-TulalipTribes\554-1598-095 116th-Ph4-PSE\99Svcs\CADD\DGN\PS&ESheets\BL1598033_PS_EC1A.dgn
TIME	9:58:19 AM
DATE	8/29/2017
PLOTTED BY	purgabut
DESIGNED BY	C. BUITRAGO
ENTERED BY	T. NABOURS
CHECKED BY	D. PROCTOR
APPROVED BY	H. LONGFELLOW

REVISION | DATE | BY

REGION NO. 10 | STATE WASH | FED.AID PROJ.NO.

JOB NUMBER

CONTRACT NO. | LOCATION NO.

P.E. STAMP BOX — DATE

CRAIG ALEXANDER BUITRAGO — STATE OF WASHINGTON — 49427 — REGISTERED PROFESSIONAL ENGINEER — 08-29-2017 — DATE — P.E. STAMP BOX

TULALIP TRIBES — Parametrix

I-5 / 116TH STREET NE
INTERCHANGE IMPROVEMENTS
PHASE 4 RAMPS

TESC PLAN - STAGE 1A

Plot 2
PLAN REF NO EC1A-1
SHEET 58 OF 238 SHEETS

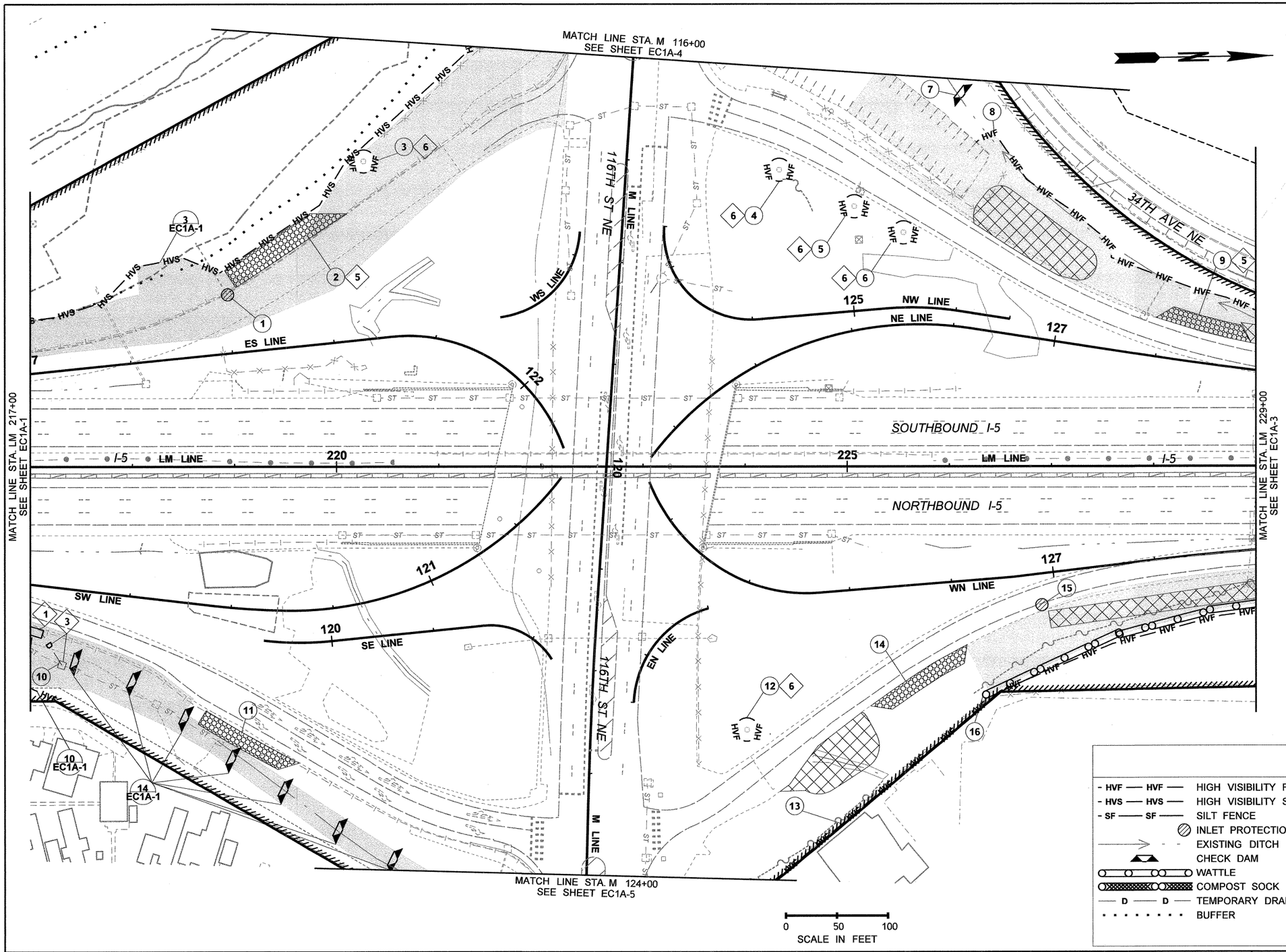

CONSTRUCTION NOTES:

1. TEMPORARY STORMWATER TREATMENT TANKS. TANKS SHALL REMAIN IN USE UNTIL CONSTRUCTION IS COMPLETED AND VEGETATION IS ESTABLISHED IN COMPOST AMENDED BIOFILTRATION SWALE (CABS) AND INFILTRATION PONDS.
2. PUMP OR GRAVITY DRAIN EXISTING DRAINAGE OR DISCHARGE FROM TEMPORARY TREATMENT TANKS TO TEMPORARY OUTFALL.
3. PUMP STORMWATER TO TEMPORARY STORMWATER TREATMENT TANKS. PUMP LOCATION AND TYPE TO BE DETERMINED BY CONTRACTOR AND TANK SUPPLIER. SEE SHEET TD1 FOR PUMP DETAIL AND SIZING.
4. REVISED LOCATION FROM PREVIOUS CONSTRUCTION STAGE.
5. RESTORE EMBANKMENT VEGETATION AFTER STAGE OF CONSTRUCTION IS COMPLETE. SEE LANDSCAPE PLANS FOR PLANTING DETAILS.
6. PROTECT TREE

GENERAL NOTES:

1. INSTALL SILT FENCE, WATTLES AND COMPOST SOCKS ALONG CONTOURS.
2. ALL BMPS, WITH THE EXCEPTION OF COMPOST SOCKS, SHALL BE REMOVED WHEN PROJECT IS COMPLETED AND SITE IS STABILIZED. COMPOST SOCKS SHALL REMAIN IN PLACE AFTER COMPLETION OF PROJECT.
3. TEMPORARY STORMWATER TREATMENT TANKS, PUMPS AND HOSES WILL BE PAID UNDER EROSION/WATER POLLUTION CONTROL FORCE ACCOUNT.
4. NO CLEARING AND GRUBBING SHALL BE PERFORMED WITHIN THE DRIP LINES OF EXISTING TREES THAT ARE OUTSIDE OF CUT AND FILL LIMITS. INSTALL AND MAINTAIN HVF AT THE DRIPLINE (10' MINIMUM FROM TRUNK) FOR ALL TREES DESIGNATED TO BE PROTECTED.
5. SEE SPECIAL PROVISIONS 1-07.16(2) AND 2-01.3 FOR ADDITIONAL TREE AND TREE ROOT PROTECTION REQUIREMENTS.

LEGEND

- HVF — HIGH VISIBILITY FENCE
- HVS — HIGH VISIBILITY SILT FENCE
- SF — SILT FENCE
- INLET PROTECTION
- EXISTING DITCH
- CHECK DAM
- WATTLE
- COMPOST SOCK
- D — TEMPORARY DRAIN PIPE
- BUFFER
- WORK AREA
- STABILIZED CONSTRUCTION ENTRANCE
- (1) QUANTITY TABULATION NOTE
- (2) EC1A-1 QUANTITY TABULATION NOTE CONTINUED
- LIMIT CONSTRUCTION ACCESS TO PROTECT FUTURE INFILTRATION BMP FOOTPRINT FROM SEDIMENT AND COMPACTION.

FILE NAME	U:\PSO\Projects\Clients\1598-TulalipTribes\554-1598-095 116th-Ph4-PSE\99Svcs\CADD\DGN\PS&ESheets\BL1598033_PS_EC1A.dgn
TIME	9:58:41 AM
DATE	8/29/2017
PLOTTED BY	purgabut
DESIGNED BY	C. BUITRAGO
ENTERED BY	T. NABOURS
CHECKED BY	D. PROCTOR
APPROVED BY	H. LONGFELLOW

REVISION | DATE | BY

REGION NO. 10 | STATE WASH | FED.AID PROJ.NO.

JOB NUMBER

CONTRACT NO. | LOCATION NO.

P.E. STAMP BOX — DATE

CRAIG ALEXANDER BUITRAGO — STATE OF WASHINGTON — 45427 — REGISTERED PROFESSIONAL ENGINEER — 08-29-2017 DATE — P.E. STAMP BOX

TULALIP TRIBES — Parametrix

I-5 / 116TH STREET NE INTERCHANGE IMPROVEMENTS PHASE 4 RAMPS

TESC PLAN - STAGE 1A

Plot 3

PLAN REF NO EC1A-2

SHEET 59 OF 238 SHEETS

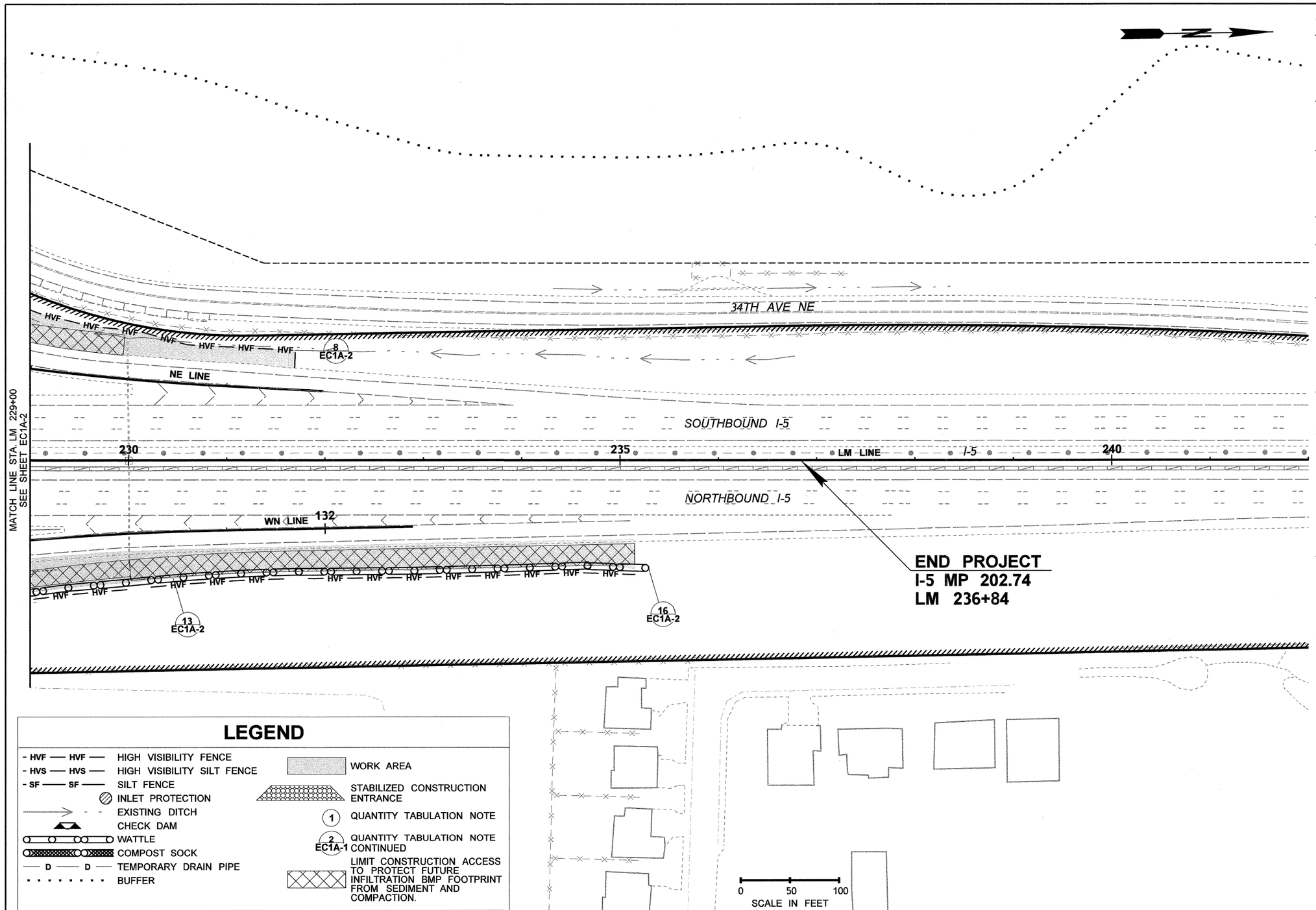

CONSTRUCTION NOTES:

1. TEMPORARY STORMWATER TREATMENT TANKS. TANKS SHALL REMAIN IN USE UNTIL CONSTRUCTION IS COMPLETED AND VEGETATION IS ESTABLISHED IN COMPOST AMENDED BIOFILTRATION SWALE (CABS) AND INFILTRATION PONDS.
2. PUMP OR GRAVITY DRAIN EXISTING DRAINAGE OR DISCHARGE FROM TEMPORARY TREATMENT TANKS TO TEMPORARY OUTFALL.
3. PUMP STORMWATER TO TEMPORARY STORMWATER TREATMENT TANKS. PUMP LOCATION AND TYPE TO BE DETERMINED BY CONTRACTOR AND TANK SUPPLIER. SEE SHEET TD1 FOR PUMP DETAIL AND SIZING.
4. REVISED LOCATION FROM PREVIOUS CONSTRUCTION STAGE.
5. RESTORE EMBANKMENT VEGETATION AFTER STAGE OF CONSTRUCTION IS COMPLETE. SEE LANDSCAPE PLANS FOR PLANTING DETAILS.
6. PROTECT TREE

GENERAL NOTES:

1. INSTALL SILT FENCE, WATTLES AND COMPOST SOCKS ALONG CONTOURS.
2. ALL BMPS, WITH THE EXCEPTION OF COMPOST SOCKS, SHALL BE REMOVED WHEN PROJECT IS COMPLETED AND SITE IS STABILIZED. COMPOST SOCKS SHALL REMAIN IN PLACE AFTER COMPLETION OF PROJECT.
3. TEMPORARY STORMWATER TREATMENT TANKS, PUMPS AND HOSES WILL BE PAID UNDER EROSION/WATER POLLUTION CONTROL FORCE ACCOUNT.
4. NO CLEARING AND GRUBBING SHALL BE PERFORMED WITHIN THE DRIP LINES OF EXISTING TREES THAT ARE OUTSIDE OF CUT AND FILL LIMITS. INSTALL AND MAINTAIN HVF AT THE DRIPLINE (10' MINIMUM FROM TRUNK) FOR ALL TREES DESIGNATED TO BE PROTECTED.
5. SEE SPECIAL PROVISIONS 1-07.16(2) AND 2-01.3 FOR ADDITIONAL TREE AND TREE ROOT PROTECTION REQUIREMENTS.

LEGEND

- HVF — HVF — HIGH VISIBILITY FENCE
- HVS — HVS — HIGH VISIBILITY SILT FENCE
- SF — SF — SILT FENCE
- INLET PROTECTION
- EXISTING DITCH
- CHECK DAM
- WATTLE
- COMPOST SOCK
- D — D — TEMPORARY DRAIN PIPE
- BUFFER
- WORK AREA
- STABILIZED CONSTRUCTION ENTRANCE
- (1) QUANTITY TABULATION NOTE
- (2) EC1A-1 QUANTITY TABULATION NOTE CONTINUED
- LIMIT CONSTRUCTION ACCESS TO PROTECT FUTURE INFILTRATION BMP FOOTPRINT FROM SEDIMENT AND COMPACTION.

FILE NAME	U:\PSO\Projects\Clients\1598-TulalipTribes\554-1598-095 116th-Ph4-PSE\99Svcs\CADD\DGN\PS&ESheets\BL1598033_PS_EC1A.dgn
TIME	9:58:56 AM
DATE	8/29/2017
PLOTTED BY	purgabut
DESIGNED BY	C. BUITRAGO
ENTERED BY	T. NABOURS
CHECKED BY	D. PROCTOR
APPROVED BY	H. LONGFELLOW

REVISION	DATE	BY

REGION NO.	STATE	FED.AID PROJ.NO.
10	WASH	
JOB NUMBER		
CONTRACT NO.		LOCATION NO.

P.E. STAMP BOX — DATE

CRAIG ALEXANDER BUITRAGO — STATE OF WASHINGTON — 49427 — REGISTERED PROFESSIONAL ENGINEER
08-29-2017
P.E. STAMP BOX — DATE

TULALIP TRIBES — Parametrix

I-5 / 116TH STREET NE
INTERCHANGE IMPROVEMENTS
PHASE 4 RAMPS

TESC PLAN - STAGE 1A

Plot 4

PLAN REF NO
EC1A-3

SHEET 60 OF 238 SHEETS

CONSTRUCTION NOTES:

1. TEMPORARY STORMWATER TREATMENT TANKS. TANKS SHALL REMAIN IN USE UNTIL CONSTRUCTION IS COMPLETED AND VEGETATION IS ESTABLISHED IN COMPOST AMENDED BIOFILTRATION SWALE (CABS) AND INFILTRATION PONDS.
2. PUMP OR GRAVITY DRAIN EXISTING DRAINAGE OR DISCHARGE FROM TEMPORARY TREATMENT TANKS TO TEMPORARY OUTFALL.
3. PUMP STORMWATER TO TEMPORARY STORMWATER TREATMENT TANKS. PUMP LOCATION AND TYPE TO BE DETERMINED BY CONTRACTOR AND TANK SUPPLIER. SEE SHEET TD1 FOR PUMP DETAIL AND SIZING.
4. REVISED LOCATION FROM PREVIOUS CONSTRUCTION STAGE.
5. RESTORE EMBANKMENT VEGETATION AFTER STAGE OF CONSTRUCTION IS COMPLETE. SEE LANDSCAPE PLANS FOR PLANTING DETAILS.
6. PROTECT TREE

GENERAL NOTES:

1. INSTALL SILT FENCE, WATTLES AND COMPOST SOCKS ALONG CONTOURS.
2. ALL BMPS, WITH THE EXCEPTION OF COMPOST SOCKS, SHALL BE REMOVED WHEN PROJECT IS COMPLETED AND SITE IS STABILIZED. COMPOST SOCKS SHALL REMAIN IN PLACE AFTER COMPLETION OF PROJECT.
3. TEMPORARY STORMWATER TREATMENT TANKS, PUMPS AND HOSES WILL BE PAID UNDER EROSION/WATER POLLUTION CONTROL FORCE ACCOUNT.
4. NO CLEARING AND GRUBBING SHALL BE PERFORMED WITHIN THE DRIP LINES OF EXISTING TREES THAT ARE OUTSIDE OF CUT AND FILL LIMITS. INSTALL AND MAINTAIN HVF AT THE DRIPLINE (10' MINIMUM FROM TRUNK) FOR ALL TREES DESIGNATED TO BE PROTECTED.
5. SEE SPECIAL PROVISIONS 1-07.16(2) AND 2-01.3 FOR ADDITIONAL TREE AND TREE ROOT PROTECTION REQUIREMENTS.

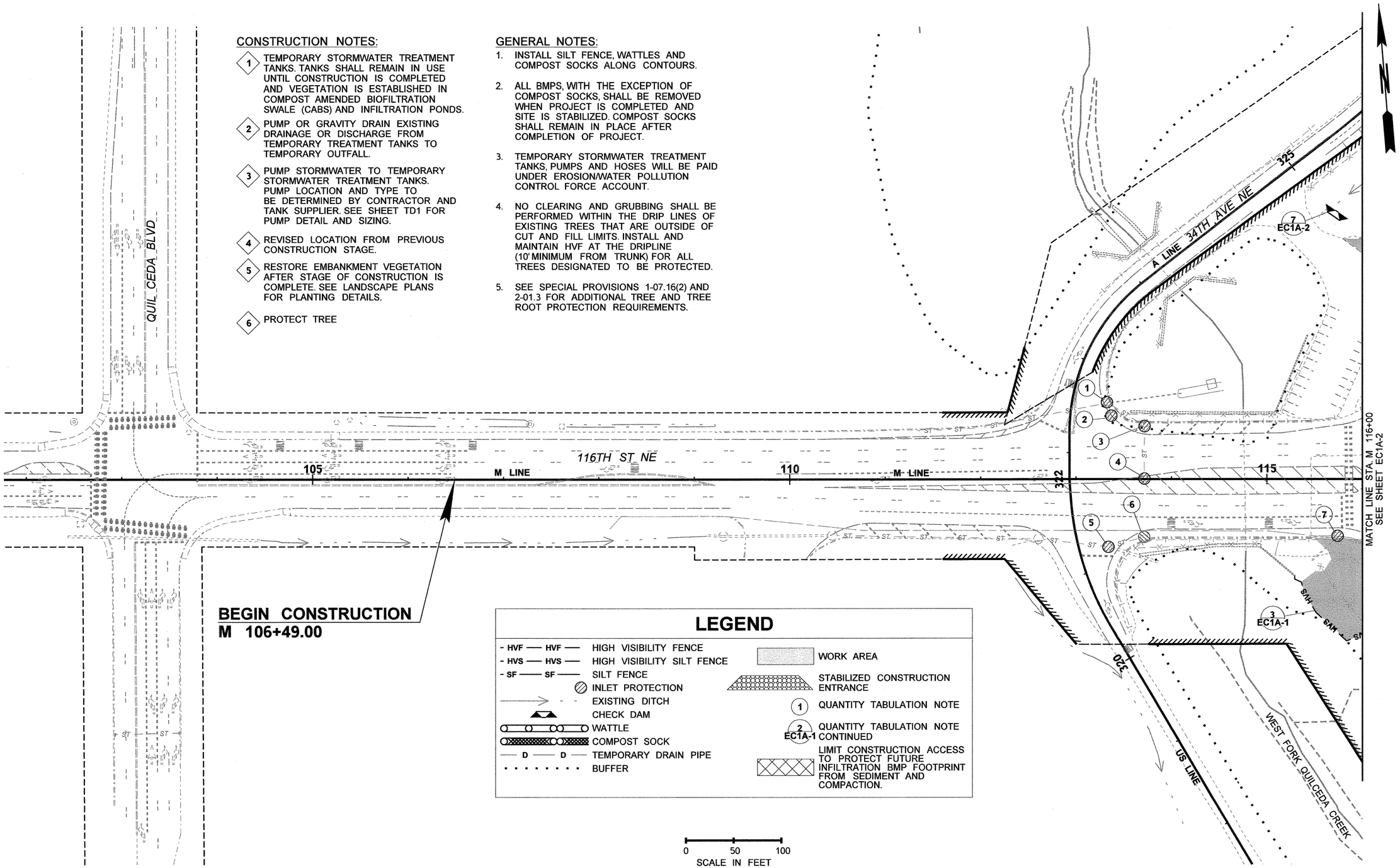

FILE NAME	U:\PSO\Projects\Clients\1598-TulalipTribes\554-1598-095 116th-Ph4-PSE\99Svcs\CADD\DGN\PS&ESheets\BL1598033_PS_EC1A.dgn					
TIME	9:59:08 AM					
DATE	8/29/2017					
PLOTTED BY	purgabut					
DESIGNED BY	C. BUITRAGO					
ENTERED BY	T. NABOURS					
CHECKED BY	D. PROCTOR					
APPROVED BY	H. LONGFELLOW					
		REVISION	DATE	BY		

REGION NO.	STATE	FED.AID PROJ.NO.
10	WASH	
JOB NUMBER		
CONTRACT NO.		LOCATION NO.

P.E. STAMP BOX — DATE

P.E. STAMP BOX — DATE: 08-29-2017

TULALIP TRIBES — Parametrix

I-5 / 116TH STREET NE INTERCHANGE IMPROVEMENTS PHASE 4 RAMPS

TESC PLAN - STAGE 1A

Plot 6

PLAN REF NO: EC1A-4

SHEET 61 OF 238 SHEETS

GENERAL NOTES:

1. INSTALL SILT FENCE, WATTLES AND COMPOST SOCKS ALONG CONTOURS.
2. ALL BMPS, WITH THE EXCEPTION OF COMPOST SOCKS, SHALL BE REMOVED WHEN PROJECT IS COMPLETED AND SITE IS STABILIZED. COMPOST SOCKS SHALL REMAIN IN PLACE AFTER COMPLETION OF PROJECT.
3. TEMPORARY STORMWATER TREATMENT TANKS, PUMPS AND HOSES WILL BE PAID UNDER EROSION/WATER POLLUTION CONTROL FORCE ACCOUNT.
4. NO CLEARING AND GRUBBING SHALL BE PERFORMED WITHIN THE DRIP LINES OF EXISTING TREES THAT ARE OUTSIDE OF CUT AND FILL LIMITS. INSTALL AND MAINTAIN HVF AT THE DRIPLINE (10' MINIMUM FROM TRUNK) FOR ALL TREES DESIGNATED TO BE PROTECTED.
5. SEE SPECIAL PROVISIONS 1-07.16(2) AND 2-01.3 FOR ADDITIONAL TREE AND TREE ROOT PROTECTION REQUIREMENTS.

CONSTRUCTION NOTES:

1. TEMPORARY STORMWATER TREATMENT TANKS. TANKS SHALL REMAIN IN USE UNTIL CONSTRUCTION IS COMPLETED AND VEGETATION IS ESTABLISHED IN COMPOST AMENDED BIOFILTRATION SWALE (CABS) AND INFILTRATION PONDS.
2. PUMP OR GRAVITY DRAIN EXISTING DRAINAGE OR DISCHARGE FROM TEMPORARY TREATMENT TANKS TO TEMPORARY OUTFALL.
3. PUMP STORMWATER TO TEMPORARY STORMWATER TREATMENT TANKS. PUMP LOCATION AND TYPE TO BE DETERMINED BY CONTRACTOR AND TANK SUPPLIER. SEE SHEET TD1 FOR PUMP DETAIL AND SIZING.
4. REVISED LOCATION FROM PREVIOUS CONSTRUCTION STAGE.
5. RESTORE EMBANKMENT VEGETATION AFTER STAGE OF CONSTRUCTION IS COMPLETE. SEE LANDSCAPE PLANS FOR PLANTING DETAILS.
6. PROTECT TREE

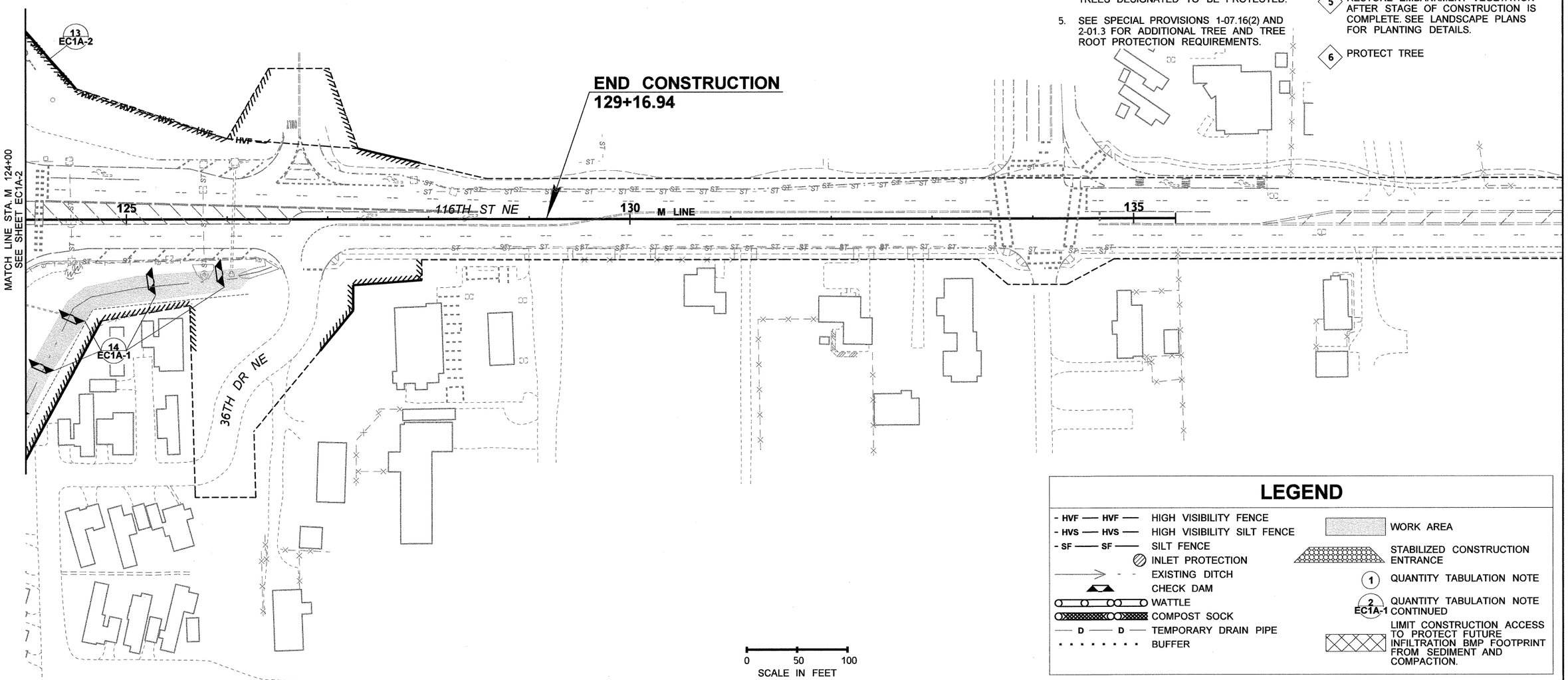

LEGEND

- HVF — HVF — HIGH VISIBILITY FENCE
- HVS — HVS — HIGH VISIBILITY SILT FENCE
- SF — SF — SILT FENCE
- INLET PROTECTION
- EXISTING DITCH
- CHECK DAM
- WATTLE
- COMPOST SOCK
- D — D — TEMPORARY DRAIN PIPE
- BUFFER
- WORK AREA
- STABILIZED CONSTRUCTION ENTRANCE
- (1) QUANTITY TABULATION NOTE
- (2) EC1A-1 QUANTITY TABULATION NOTE CONTINUED
- LIMIT CONSTRUCTION ACCESS TO PROTECT FUTURE INFILTRATION BMP FOOTPRINT FROM SEDIMENT AND COMPACTION.

FILE NAME	U:\PSO\Projects\Clients\1598-TulalipTribes\554-1598-095 116th-Ph4-PSE\99Svcs\CADD\DGN\PS&ESheets\BL1598033_PS_EC1A.dgn
TIME	9:59:20 AM
DATE	8/29/2017
PLOTTED BY	purgabut
DESIGNED BY	C. BUITRAGO
ENTERED BY	T. NABOURS
CHECKED BY	D. PROCTOR
APPROVED BY	H. LONGFELLOW

REVISION	DATE	BY

REGION NO.	STATE	FED.AID PROJ.NO.
10	WASH	
JOB NUMBER		
CONTRACT NO.		LOCATION NO.

P.E. STAMP BOX — DATE

CRAIG ALEXANDER BUITRAGO — STATE OF WASHINGTON — 49427 — REGISTERED PROFESSIONAL ENGINEER

08-29-2017 DATE

P.E. STAMP BOX

TULALIP TRIBES — Parametrix

I-5 / 116TH STREET NE INTERCHANGE IMPROVEMENTS PHASE 4 RAMPS

TESC PLAN - STAGE 1A

Plot 7

PLAN REF NO EC1A-5

SHEET 62 OF 238 SHEETS

CONSTRUCTION NOTES:

1. TEMPORARY STORMWATER TREATMENT TANKS. TANKS SHALL REMAIN IN USE UNTIL CONSTRUCTION IS COMPLETED AND VEGETATION IS ESTABLISHED IN COMPOST AMENDED BIOFILTRATION SWALE (CABS) AND INFILTRATION PONDS.
2. PUMP OR GRAVITY DRAIN EXISTING DRAINAGE OR DISCHARGE FROM TEMPORARY TREATMENT TANKS TO TEMPORARY OUTFALL.
3. PUMP STORMWATER TO TEMPORARY STORMWATER TREATMENT TANKS. PUMP LOCATION AND TYPE TO BE DETERMINED BY CONTRACTOR AND TANK SUPPLIER. SEE SHEET TD1 FOR PUMP DETAIL AND SIZING.
4. REVISED LOCATION FROM PREVIOUS CONSTRUCTION STAGE.
5. RESTORE EMBANKMENT VEGETATION AFTER STAGE OF CONSTRUCTION IS COMPLETE. SEE LANDSCAPE PLANS FOR PLANTING DETAILS.
6. PROTECT TREE

GENERAL NOTES:

1. INSTALL SILT FENCE, WATTLES, AND COMPOST SOCKS ALONG CONTOURS.
2. ALL BMPS, WITH THE EXCEPTION OF COMPOST SOCKS, SHALL BE REMOVED WHEN PROJECT IS COMPLETED AND SITE IS STABILIZED. COMPOST SOCKS SHALL REMAIN IN PLACE AFTER COMPLETION OF PROJECT.
3. TEMPORARY STORMWATER TREATMENT TANKS, PUMPS AND HOSES WILL BE PAID UNDER EROSION/WATER POLLUTION CONTROL FORCE ACCOUNT.
4. NO CLEARING AND GRUBBING SHALL BE PERFORMED WITHIN THE DRIP LINES OF EXISTING TREES THAT ARE OUTSIDE OF CUT AND FILL LIMITS. INSTALL AND MAINTAIN HVF AT THE DRIPLINE (10' MINIMUM FROM TRUNK) FOR ALL TREES DESIGNATED TO BE PROTECTED.
5. SEE SPECIAL PROVISIONS 1-07.16(2) AND 2-01.3 FOR ADDITIONAL TREE AND TREE ROOT PROTECTION REQUIREMENTS.

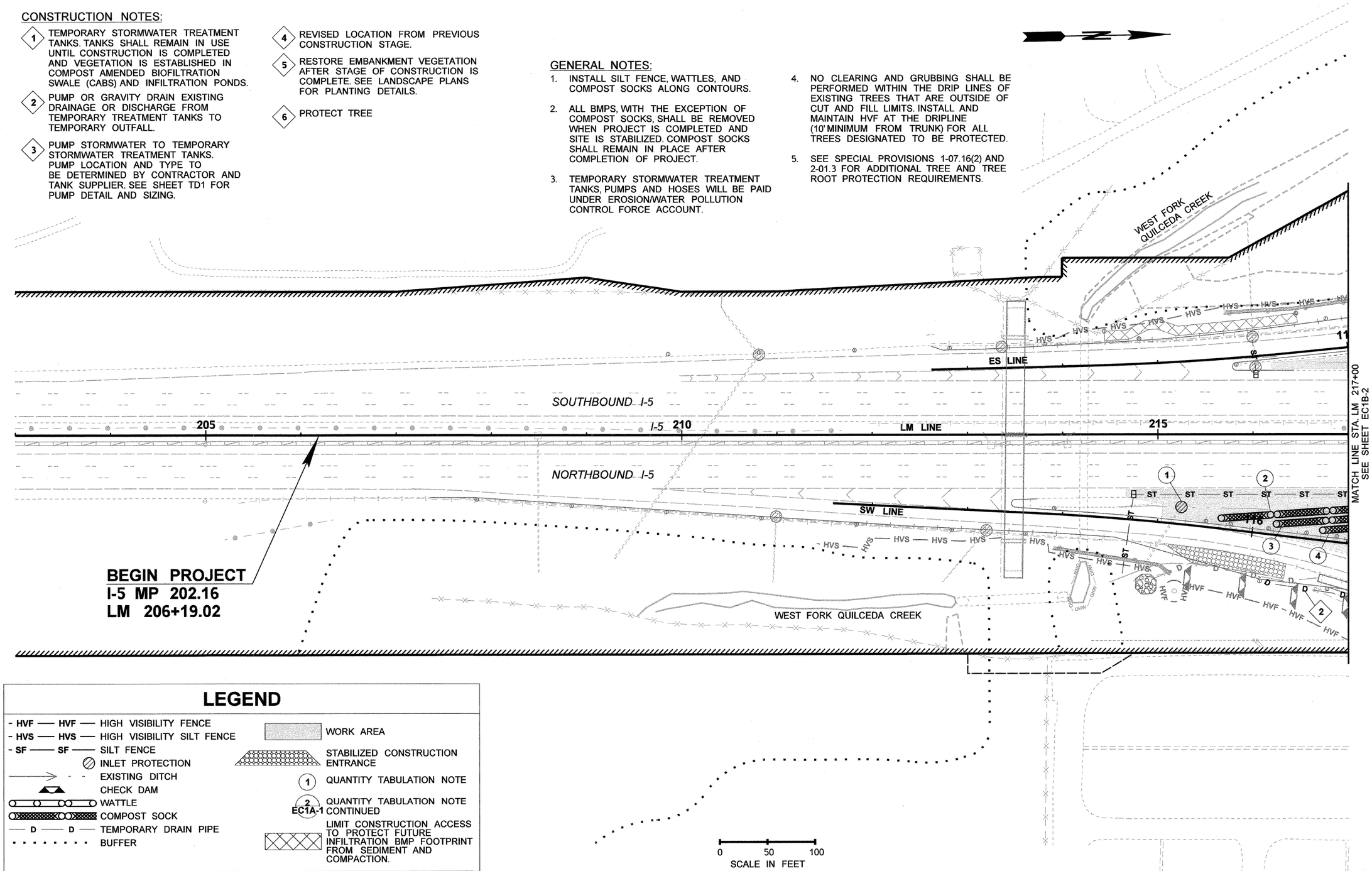

LEGEND

- HVF — HVF — HIGH VISIBILITY FENCE
- HVS — HVS — HIGH VISIBILITY SILT FENCE
- SF — SF — SILT FENCE
- INLET PROTECTION
- EXISTING DITCH
- CHECK DAM
- WATTLE
- COMPOST SOCK
- D — D — TEMPORARY DRAIN PIPE
- BUFFER
- WORK AREA
- STABILIZED CONSTRUCTION ENTRANCE
- (1) QUANTITY TABULATION NOTE
- (2) EC1A-1 QUANTITY TABULATION NOTE CONTINUED
- LIMIT CONSTRUCTION ACCESS TO PROTECT FUTURE INFILTRATION BMP FOOTPRINT FROM SEDIMENT AND COMPACTION.

FILE NAME	U:\PSO\Projects\Clients\1598-TulalipTribes\554-1598-095 116th-Ph4-PSE\99Svcs\CADD\DGN\PS&ESheets\BL1598033_PS_EC1B.dgn
TIME	3:08:28 PM
DATE	8/29/2017
PLOTTED BY	purgabut
DESIGNED BY	C. BUITRAGO
ENTERED BY	T. NABOURS
CHECKED BY	D. PROCTOR
APPROVED BY	H. LONGFELLOW

REVISION	DATE	BY

REGION NO.	STATE	FED.AID PROJ.NO.
10	WASH	
JOB NUMBER		
CONTRACT NO.		LOCATION NO.

P.E. STAMP BOX — DATE

P.E. STAMP BOX — DATE: 08-29-2017

TULALIP TRIBES — Parametrix

I-5 / 116TH STREET NE INTERCHANGE IMPROVEMENTS PHASE 4 RAMPS

TESC PLAN - STAGE 1B

Plot 2

PLAN REF NO: EC1B-1

SHEET 63 OF 238 SHEETS

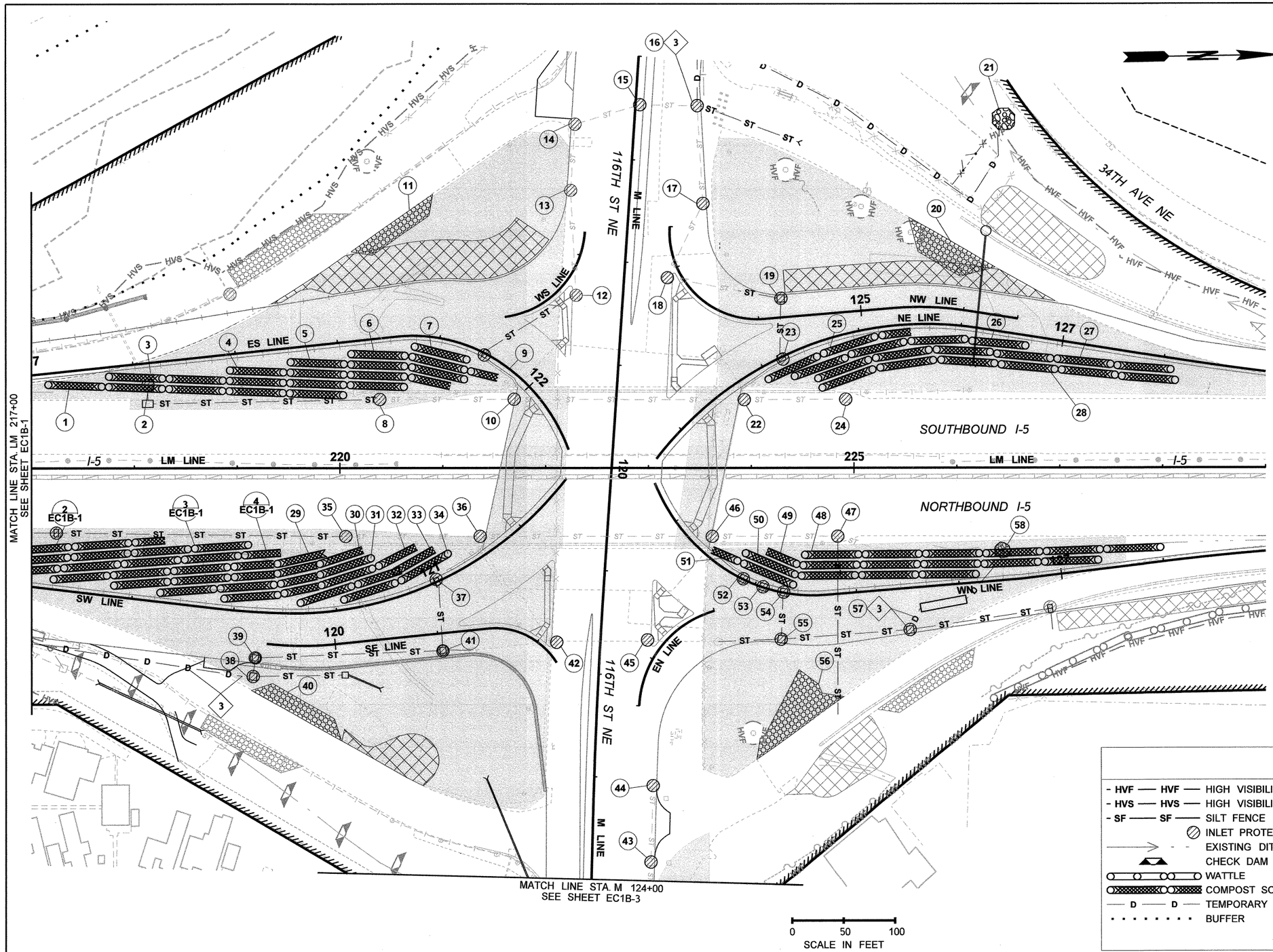

CONSTRUCTION NOTES:

1. TEMPORARY STORMWATER TREATMENT TANKS. TANKS SHALL REMAIN IN USE UNTIL CONSTRUCTION IS COMPLETED AND VEGETATION IS ESTABLISHED IN COMPOST AMENDED BIOFILTRATION SWALE (CABS) AND INFILTRATION PONDS.
2. PUMP OR GRAVITY DRAIN EXISTING DRAINAGE OR DISCHARGE FROM TEMPORARY TREATMENT TANKS TO TEMPORARY OUTFALL.
3. PUMP STORMWATER TO TEMPORARY STORMWATER TREATMENT TANKS. PUMP LOCATION AND TYPE TO BE DETERMINED BY CONTRACTOR AND TANK SUPPLIER. SEE SHEET TD1 FOR PUMP DETAIL AND SIZING.
4. REVISED LOCATION FROM PREVIOUS CONSTRUCTION STAGE.
5. RESTORE EMBANKMENT VEGETATION AFTER STAGE OF CONSTRUCTION IS COMPLETE. SEE LANDSCAPE PLANS FOR PLANTING DETAILS.
6. PROTECT TREE

GENERAL NOTES:

1. INSTALL SILT FENCE, WATTLES, AND COMPOST SOCKS ALONG CONTOURS.
2. ALL BMPS, WITH THE EXCEPTION OF COMPOST SOCKS, SHALL BE REMOVED WHEN PROJECT IS COMPLETED AND SITE IS STABILIZED. COMPOST SOCKS SHALL REMAIN IN PLACE AFTER COMPLETION OF PROJECT.
3. TEMPORARY STORMWATER TREATMENT TANKS, PUMPS AND HOSES WILL BE PAID UNDER EROSION/WATER POLLUTION CONTROL FORCE ACCOUNT.
4. NO CLEARING AND GRUBBING SHALL BE PERFORMED WITHIN THE DRIP LINES OF EXISTING TREES THAT ARE OUTSIDE OF CUT AND FILL LIMITS. INSTALL AND MAINTAIN HVF AT THE DRIPLINE (10' MINIMUM FROM TRUNK) FOR ALL TREES DESIGNATED TO BE PROTECTED.
5. SEE SPECIAL PROVISIONS 1-07.16(2) AND 2-01.3 FOR ADDITIONAL TREE AND TREE ROOT PROTECTION REQUIREMENTS.

LEGEND

- HVF — HIGH VISIBILITY FENCE
- HVS — HIGH VISIBILITY SILT FENCE
- SF — SILT FENCE
- INLET PROTECTION
- EXISTING DITCH
- CHECK DAM
- WATTLE
- COMPOST SOCK
- D — TEMPORARY DRAIN PIPE
- BUFFER
- WORK AREA
- STABILIZED CONSTRUCTION ENTRANCE
- (1) QUANTITY TABULATION NOTE
- (2) EC1A-1 QUANTITY TABULATION NOTE CONTINUED
- LIMIT CONSTRUCTION ACCESS TO PROTECT FUTURE INFILTRATION BMP FOOTPRINT FROM SEDIMENT AND COMPACTION.

FILE NAME	U:\PSO\Projects\Clients\1598-TulalipTribes\554-1598-095 116th-Ph4-PSE\99Svcs\CADD\DGN\PS&ESheets\BL1598033_PS_EC1B.dgn
TIME	12:41:57 PM
DATE	8/29/2017
PLOTTED BY	purgabut
DESIGNED BY	C. BUITRAGO
ENTERED BY	T. NABOURS
CHECKED BY	D. PROCTOR
APPROVED BY	H. LONGFELLOW

REVISION	DATE	BY

REGION NO.	STATE	FED.AID PROJ.NO.
10	WASH	
JOB NUMBER		
CONTRACT NO.		LOCATION NO.

P.E. STAMP BOX — DATE

CRAIG ALEXANDER BUITRAGO — STATE OF WASHINGTON — 38821 — REGISTERED PROFESSIONAL ENGINEER
08-29-2017
P.E. STAMP BOX — DATE

TULALIP TRIBES — Parametrix

I-5 / 116TH STREET NE INTERCHANGE IMPROVEMENTS PHASE 4 RAMPS

TESC PLAN - STAGE 1B

Plot 3

PLAN REF NO EC1B-2

SHEET 64 OF 238 SHEETS

GENERAL NOTES:

1. INSTALL SILT FENCE, WATTLES, AND COMPOST SOCKS ALONG CONTOURS.
2. ALL BMPS, WITH THE EXCEPTION OF COMPOST SOCKS, SHALL BE REMOVED WHEN PROJECT IS COMPLETED AND SITE IS STABILIZED. COMPOST SOCKS SHALL REMAIN IN PLACE AFTER COMPLETION OF PROJECT.
3. TEMPORARY STORMWATER TREATMENT TANKS, PUMPS AND HOSES WILL BE PAID UNDER EROSION/WATER POLLUTION CONTROL FORCE ACCOUNT.
4. NO CLEARING AND GRUBBING SHALL BE PERFORMED WITHIN THE DRIP LINES OF EXISTING TREES THAT ARE OUTSIDE OF CUT AND FILL LIMITS. INSTALL AND MAINTAIN HVF AT THE DRIPLINE (10' MINIMUM FROM TRUNK) FOR ALL TREES DESIGNATED TO BE PROTECTED.
5. SEE SPECIAL PROVISIONS 1-07.16(2) AND 2-01.3 FOR ADDITIONAL TREE AND TREE ROOT PROTECTION REQUIREMENTS.

CONSTRUCTION NOTES:

1. TEMPORARY STORMWATER TREATMENT TANKS. TANKS SHALL REMAIN IN USE UNTIL CONSTRUCTION IS COMPLETED AND VEGETATION IS ESTABLISHED IN COMPOST AMENDED BIOFILTRATION SWALE (CABS) AND INFILTRATION PONDS.
2. PUMP OR GRAVITY DRAIN EXISTING DRAINAGE OR DISCHARGE FROM TEMPORARY TREATMENT TANKS TO TEMPORARY OUTFALL.
3. PUMP STORMWATER TO TEMPORARY STORMWATER TREATMENT TANKS. PUMP LOCATION AND TYPE TO BE DETERMINED BY CONTRACTOR AND TANK SUPPLIER. SEE SHEET TD1 FOR PUMP DETAIL AND SIZING.
4. REVISED LOCATION FROM PREVIOUS CONSTRUCTION STAGE.
5. RESTORE EMBANKMENT VEGETATION AFTER STAGE OF CONSTRUCTION IS COMPLETE. SEE LANDSCAPE PLANS FOR PLANTING DETAILS.
6. PROTECT TREE

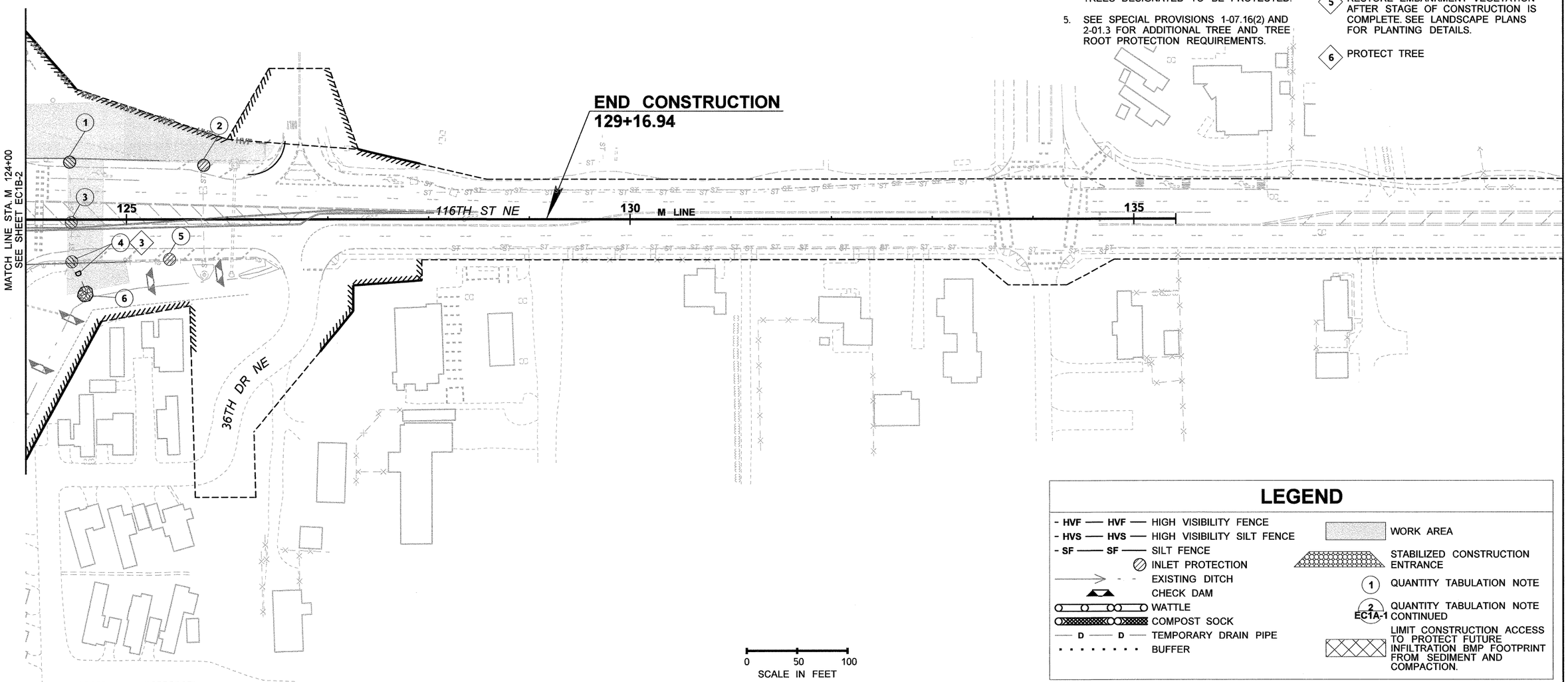

LEGEND

- HVF — HVF — HIGH VISIBILITY FENCE
- HVS — HVS — HIGH VISIBILITY SILT FENCE
- SF — SF — SILT FENCE
- INLET PROTECTION
- EXISTING DITCH
- CHECK DAM
- WATTLE
- COMPOST SOCK
- D — D — TEMPORARY DRAIN PIPE
- BUFFER
- WORK AREA
- STABILIZED CONSTRUCTION ENTRANCE
- (1) QUANTITY TABULATION NOTE
- (2) EC1A-1 QUANTITY TABULATION NOTE CONTINUED
- LIMIT CONSTRUCTION ACCESS TO PROTECT FUTURE INFILTRATION BMP FOOTPRINT FROM SEDIMENT AND COMPACTION.

FILE NAME	U:\PSO\Projects\Clients\1598-TulalipTribes\554-1598-095 116th-Ph4-PSE\99Svcs\CADD\DGN\PS&ESheets\BL1598033_PS_EC1B.dgn
TIME	12:42:19 PM
DATE	8/29/2017
PLOTTED BY	purgabut
DESIGNED BY	C. BUITRAGO
ENTERED BY	T. NABOURS
CHECKED BY	D. PROCTOR
APPROVED BY	H. LONGFELLOW

REVISION	DATE	BY

REGION NO.	STATE	FED.AID PROJ.NO.
10	WASH	
JOB NUMBER		
CONTRACT NO.		LOCATION NO.

P.E. STAMP BOX — DATE

P.E. STAMP BOX — DATE: 08-29-2017

TULALIP TRIBES — Parametrix

I-5 / 116TH STREET NE INTERCHANGE IMPROVEMENTS PHASE 4 RAMPS

TESC PLAN - STAGE 1B

Plot 7

PLAN REF NO: EC1B-3

SHEET 65 OF 238 SHEETS

CONSTRUCTION NOTES:

1. TEMPORARY STORMWATER TREATMENT TANKS. TANKS SHALL REMAIN IN USE UNTIL CONSTRUCTION IS COMPLETED AND VEGETATION IS ESTABLISHED IN COMPOST AMENDED BIOFILTRATION SWALE (CABS) AND INFILTRATION PONDS.
2. PUMP OR GRAVITY DRAIN EXISTING DRAINAGE OR DISCHARGE FROM TEMPORARY TREATMENT TANKS TO TEMPORARY OUTFALL.
3. PUMP STORMWATER TO TEMPORARY STORMWATER TREATMENT TANKS. PUMP LOCATION AND TYPE TO BE DETERMINED BY CONTRACTOR AND TANK SUPPLIER. SEE SHEET TD1 FOR PUMP DETAIL AND SIZING.
4. REVISED LOCATION FROM PREVIOUS CONSTRUCTION STAGE.
5. RESTORE EMBANKMENT VEGETATION AFTER STAGE OF CONSTRUCTION IS COMPLETE. SEE LANDSCAPE PLANS FOR PLANTING DETAILS.
6. PROTECT TREE

GENERAL NOTES:

1. INSTALL SILT FENCE AND COMPOST SOCKS ALONG CONTOURS.
2. ALL BMPS, WITH THE EXCEPTION OF COMPOST SOCKS, SHALL BE REMOVED WHEN PROJECT IS COMPLETED AND SITE IS STABILIZED. COMPOST SOCKS SHALL REMAIN IN PLACE AFTER COMPLETION OF PROJECT.
3. TEMPORARY STORMWATER TREATMENT TANKS, PUMPS AND HOSES WILL BE PAID UNDER EROSION/WATER POLLUTION CONTROL FORCE ACCOUNT.
4. NO CLEARING AND GRUBBING SHALL BE PERFORMED WITHIN THE DRIP LINES OF EXISTING TREES THAT ARE OUTSIDE OF CUT AND FILL LIMITS. INSTALL AND MAINTAIN HVF AT THE DRIPLINE (10' MINIMUM FROM TRUNK) FOR ALL TREES DESIGNATED TO BE PROTECTED.
5. SEE SPECIAL PROVISIONS 1-07.16(2) AND 2-01.3 FOR ADDITIONAL TREE AND TREE ROOT PROTECTION REQUIREMENTS.

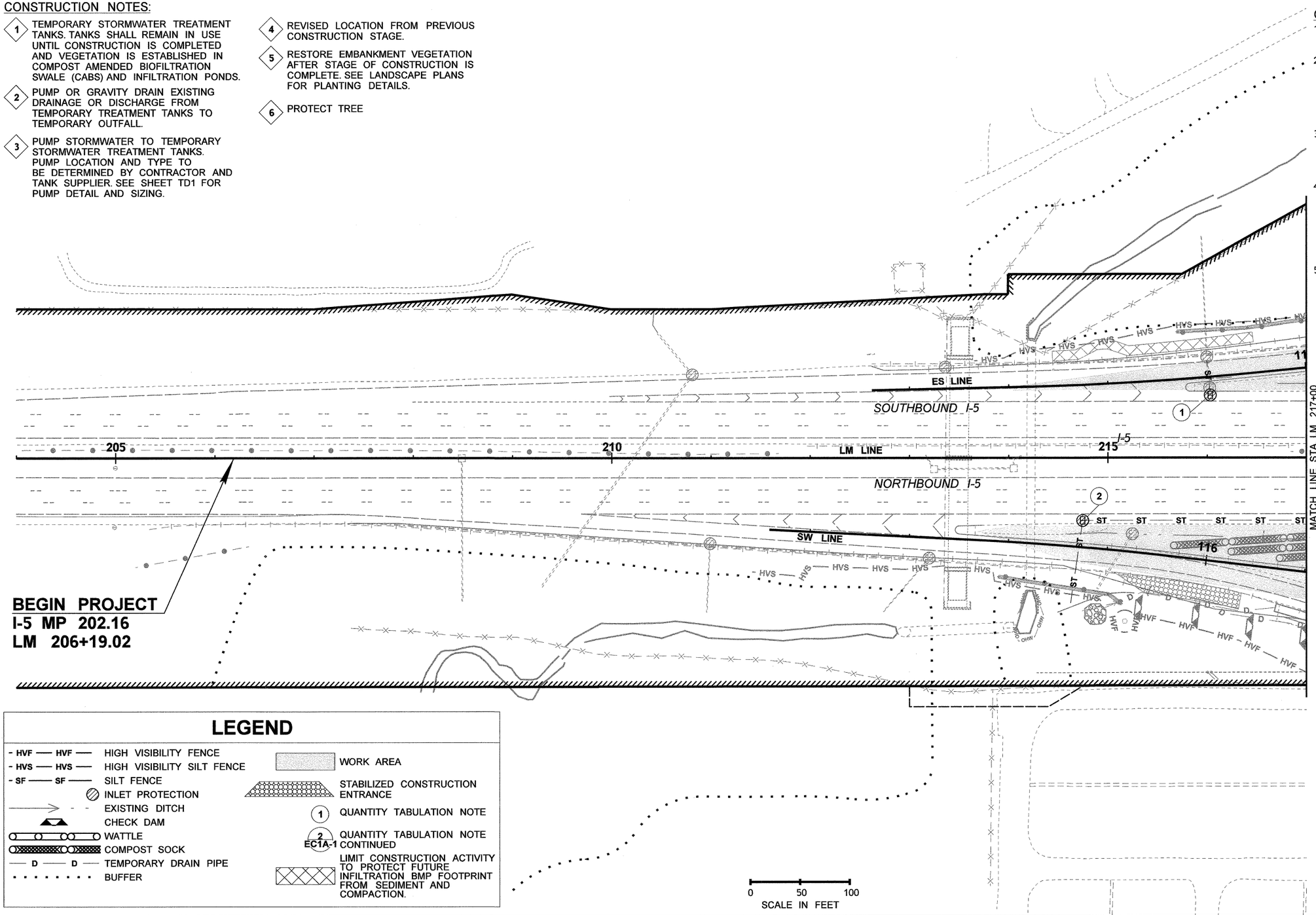

LEGEND

- HVF — HVF — HIGH VISIBILITY FENCE
- HVS — HVS — HIGH VISIBILITY SILT FENCE
- SF — SF — SILT FENCE
- INLET PROTECTION
- EXISTING DITCH
- CHECK DAM
- WATTLE
- COMPOST SOCK
- D — D — TEMPORARY DRAIN PIPE
- BUFFER
- WORK AREA
- STABILIZED CONSTRUCTION ENTRANCE
- (1) QUANTITY TABULATION NOTE
- (2) EC1A-1 QUANTITY TABULATION NOTE CONTINUED
- LIMIT CONSTRUCTION ACTIVITY TO PROTECT FUTURE INFILTRATION BMP FOOTPRINT FROM SEDIMENT AND COMPACTION.

FILE NAME	U:\PSO\Projects\Clients\1598-TulalipTribes\554-1598-095 116th-Ph4-PSE\99Svcs\CADD\DGN\PS&ESheets\BL1598033_PS_EC2.dgn
TIME	3:09:24 PM
DATE	8/29/2017
PLOTTED BY	purgabut
DESIGNED BY	C. BUITRAGO
ENTERED BY	T. NABOURS
CHECKED BY	D. PROCTOR
APPROVED BY	H. LONGFELLOW

REVISION	DATE	BY

REGION NO.	STATE	FED.AID PROJ.NO.
10	WASH	
JOB NUMBER		
CONTRACT NO.		LOCATION NO.

P.E. STAMP BOX — DATE

CRAIG ALEXANDER BUITRAGO — STATE OF WASHINGTON — 49427 — REGISTERED PROFESSIONAL ENGINEER

08-29-2017 DATE

P.E. STAMP BOX

TULALIP TRIBES — Parametrix

I-5 / 116TH STREET NE INTERCHANGE IMPROVEMENTS PHASE 4 RAMPS

TESC PLAN - STAGE 2

Plot 2

PLAN REF NO EC2-1

SHEET 66 OF 238 SHEETS

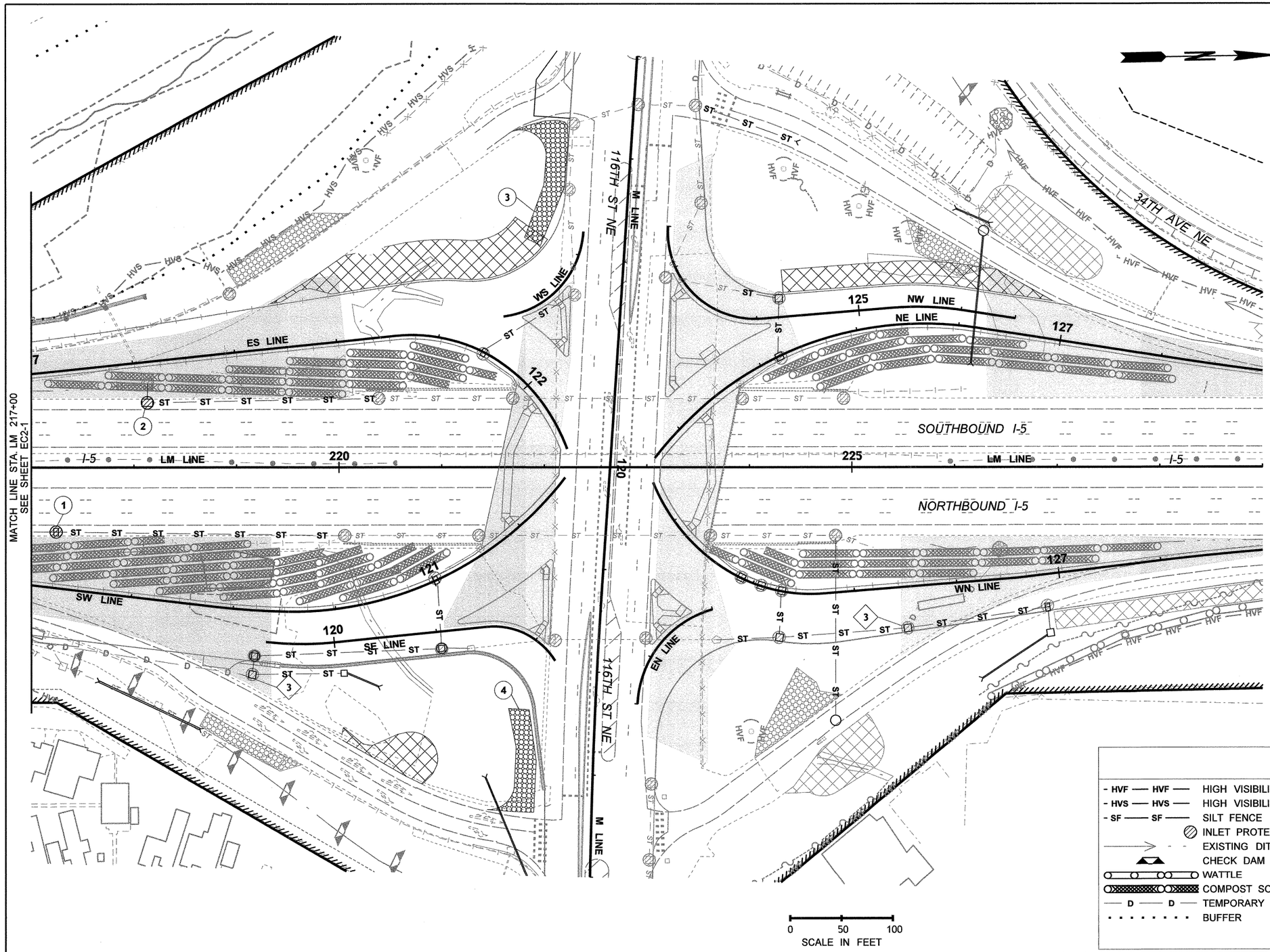

CONSTRUCTION NOTES:

1. TEMPORARY STORMWATER TREATMENT TANKS. TANKS SHALL REMAIN IN USE UNTIL CONSTRUCTION IS COMPLETED AND VEGETATION IS ESTABLISHED IN COMPOST AMENDED BIOFILTRATION SWALE (CABS) AND INFILTRATION PONDS.
2. PUMP OR GRAVITY DRAIN EXISTING DRAINAGE OR DISCHARGE FROM TEMPORARY TREATMENT TANKS TO TEMPORARY OUTFALL.
3. PUMP STORMWATER TO TEMPORARY STORMWATER TREATMENT TANKS. PUMP LOCATION AND TYPE TO BE DETERMINED BY CONTRACTOR AND TANK SUPPLIER. SEE SHEET TD1 FOR PUMP DETAIL AND SIZING.
4. REVISED LOCATION FROM PREVIOUS CONSTRUCTION STAGE.
5. RESTORE EMBANKMENT VEGETATION AFTER STAGE OF CONSTRUCTION IS COMPLETE. SEE LANDSCAPE PLANS FOR PLANTING DETAILS.
6. PROTECT TREE

GENERAL NOTES:

1. INSTALL SILT FENCE AND COMPOST SOCKS ALONG CONTOURS.
2. ALL BMPS, WITH THE EXCEPTION OF COMPOST SOCKS, SHALL BE REMOVED WHEN PROJECT IS COMPLETED AND SITE IS STABILIZED. COMPOST SOCKS
3. SHALL REMAIN IN PLACE AFTER COMPLETION OF PROJECT.

   TEMPORARY STORMWATER TREATMENT TANKS, PUMPS AND HOSES WILL BE PAID
4. UNDER EROSION/WATER POLLUTION CONTROL FORCE ACCOUNT.

   NO CLEARING AND GRUBBING SHALL BE PERFORMED WITHIN THE DRIP LINES OF EXISTING TREES THAT ARE OUTSIDE OF CUT AND FILL LIMITS. INSTALL AND MAINTAIN HVF AT THE DRIPLINE
5. (10' MINIMUM FROM TRUNK) FOR ALL TREES DESIGNATED TO BE PROTECTED.

   SEE SPECIAL PROVISIONS 1-07.16(2) AND 2-01.3 FOR ADDITIONAL TREE AND TREE ROOT PROTECTION REQUIREMENTS.

LEGEND

- HVF — HVF — HIGH VISIBILITY FENCE
- HVS — HVS — HIGH VISIBILITY SILT FENCE
- SF — SF — SILT FENCE
- INLET PROTECTION
- EXISTING DITCH
- CHECK DAM
- WATTLE
- COMPOST SOCK
- D — D — TEMPORARY DRAIN PIPE
- BUFFER
- WORK AREA
- STABILIZED CONSTRUCTION ENTRANCE
- (1) QUANTITY TABULATION NOTE
- (2) EC1A-1 QUANTITY TABULATION NOTE CONTINUED
- LIMIT CONSTRUCTION ACTIVITY TO PROTECT FUTURE INFILTRATION BMP FOOTPRINT FROM SEDIMENT AND COMPACTION.

FILE NAME	U:\PSO\Projects\Clients\1598-TulalipTribes\554-1598-095 116th-Ph4-PSE\99Svcs\CADD\DGN\PS&ESheets\BL1598033_PS_EC2.dgn
TIME	1:04:16 PM
DATE	8/29/2017
PLOTTED BY	purgabut
DESIGNED BY	C. BUITRAGO
ENTERED BY	T. NABOURS
CHECKED BY	D. PROCTOR
APPROVED BY	H. LONGFELLOW

REVISION	DATE	BY

REGION NO.	STATE	FED.AID PROJ.NO.
10	WASH	
JOB NUMBER		
CONTRACT NO.		LOCATION NO.

P.E. STAMP BOX — DATE

ALEXANDER BUITRAGO — STATE OF WASHINGTON — 40427 — REGISTERED PROFESSIONAL ENGINEER — 08-29-2017 — DATE — P.E. STAMP BOX

TULALIP TRIBES — Parametrix

I-5 / 116TH STREET NE INTERCHANGE IMPROVEMENTS PHASE 4 RAMPS

TESC PLAN - STAGE 2

Plot 3

PLAN REF NO **EC2-2**

SHEET 67 OF 238 SHEETS

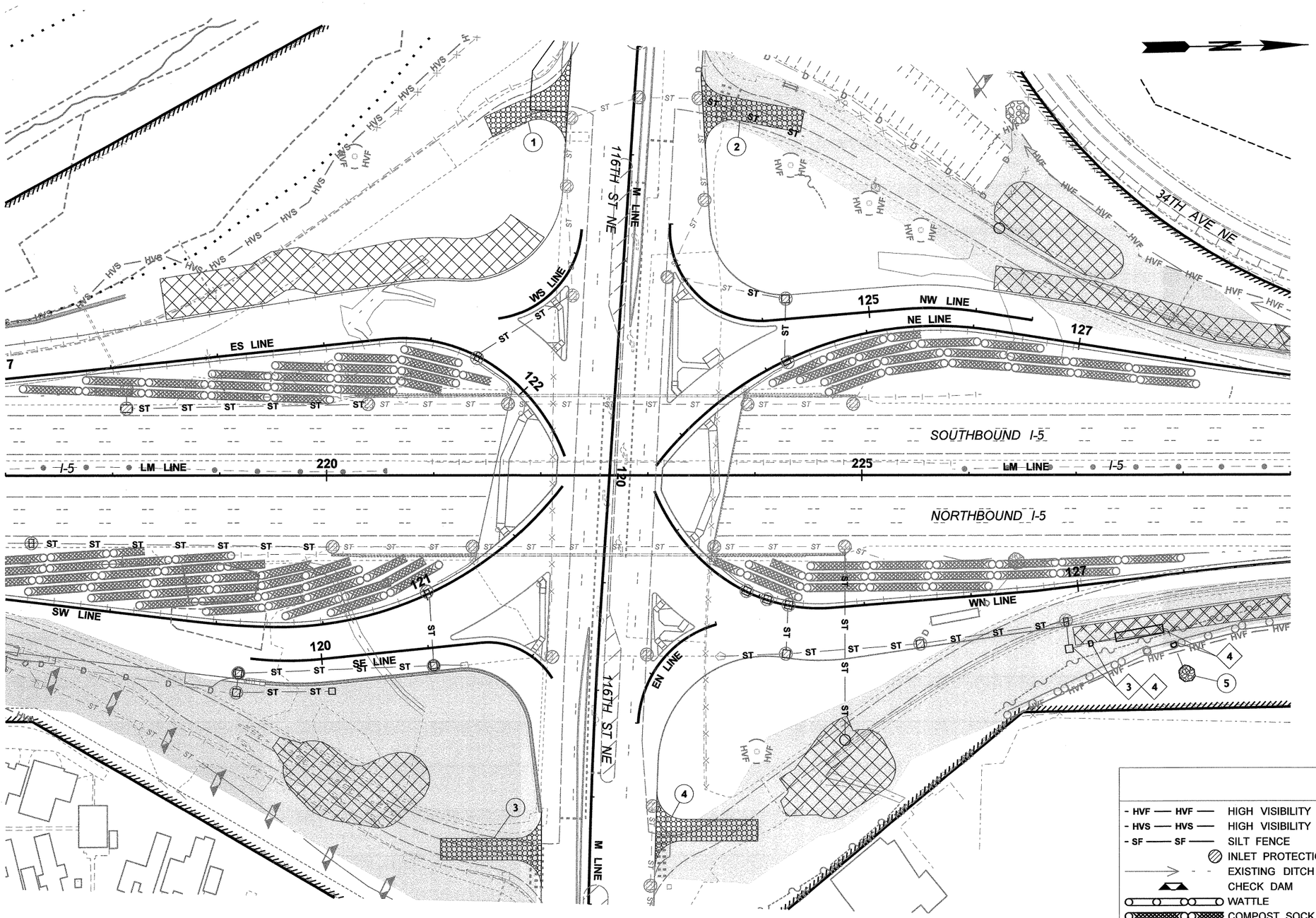

CONSTRUCTION NOTES:

1. TEMPORARY STORMWATER TREATMENT TANKS. TANKS SHALL REMAIN IN USE UNTIL CONSTRUCTION IS COMPLETED AND VEGETATION IS ESTABLISHED IN COMPOST AMENDED BIOFILTRATION SWALE (CABS) AND INFILTRATION PONDS.
2. PUMP OR GRAVITY DRAIN EXISTING DRAINAGE OR DISCHARGE FROM TEMPORARY TREATMENT TANKS TO TEMPORARY OUTFALL.
3. PUMP STORMWATER TO TEMPORARY STORMWATER TREATMENT TANKS. PUMP LOCATION AND TYPE TO BE DETERMINED BY CONTRACTOR AND TANK SUPPLIER. SEE SHEET TD1 FOR PUMP DETAIL AND SIZING.
4. REVISED LOCATION FROM PREVIOUS CONSTRUCTION STAGE.
5. RESTORE EMBANKMENT VEGETATION AFTER STAGE OF CONSTRUCTION IS COMPLETE. SEE LANDSCAPE PLANS FOR PLANTING DETAILS.

GENERAL NOTES:

1. INSTALL SILT FENCE AND COMPOST SOCKS ALONG CONTOURS.
2. ALL BMPS, WITH THE EXCEPTION OF COMPOST SOCKS, SHALL BE REMOVED WHEN PROJECT IS COMPLETED AND SITE IS STABILIZED. COMPOST SOCKS SHALL REMAIN IN PLACE AFTER COMPLETION OF PROJECT.
3. TEMPORARY STORMWATER TREATMENT TANKS, PUMPS AND HOSES WILL BE PAID UNDER EROSION/WATER POLLUTION CONTROL FORCE ACCOUNT.
4. NO CLEARING AND GRUBBING SHALL BE PERFORMED WITHIN THE DRIP LINES OF EXISTING TREES THAT ARE OUTSIDE OF CUT AND FILL LIMITS. INSTALL AND MAINTAIN HVF AT THE DRIPLINE (10' MINIMUM FROM TRUNK) FOR ALL TREES DESIGNATED TO BE PROTECTED.
5. SEE SPECIAL PROVISIONS 1-07.16(2) AND 2-01.3 FOR ADDITIONAL TREE AND TREE ROOT PROTECTION REQUIREMENTS.

LEGEND

- HVF — HIGH VISIBILITY FENCE
- HVS — HIGH VISIBILITY SILT FENCE
- SF — SILT FENCE
- INLET PROTECTION
- EXISTING DITCH
- CHECK DAM
- WATTLE
- COMPOST SOCK
- D — TEMPORARY DRAIN PIPE
- BUFFER
- WORK AREA
- STABILIZED CONSTRUCTION ENTRANCE
- (1) QUANTITY TABULATION NOTE
- (2) EC1A-1 QUANTITY TABULATION NOTE CONTINUED
- LIMIT CONSTRUCTION ACCESS TO PROTECT FUTURE INFILTRATION BMP FOOTPRINT FROM SEDIMENT AND COMPACTION.

0 50 100
SCALE IN FEET

FILE NAME	U:\PSO\Projects\Clients\1598-TulalipTribes\554-1598-095 116th-Ph4-PSE\99Svcs\CADD\DGN\PS&ESheets\BL1598033_PS_EC3.dgn
TIME	3:18:22 PM
DATE	8/29/2017
PLOTTED BY	purgabut
DESIGNED BY	C. BUITRAGO
ENTERED BY	T. NABOURS
CHECKED BY	D. PROCTOR
APPROVED BY	H. LONGFELLOW

REVISION	DATE	BY

REGION NO.	STATE	FED.AID PROJ.NO.
10	WASH	
JOB NUMBER		
CONTRACT NO.		LOCATION NO.

P.E. STAMP BOX — DATE

CRAIG ALEXANDER BUITRAGO — STATE OF WASHINGTON — REGISTERED PROFESSIONAL ENGINEER
08-29-2017
P.E. STAMP BOX — DATE

TULALIP TRIBES
Parametrix

I-5 / 116TH STREET NE INTERCHANGE IMPROVEMENTS PHASE 3 RAMPS

TESC PLAN - STAGE 3

Plot 3
PLAN REF NO
EC3-1
SHEET 68 OF 238 SHEETS

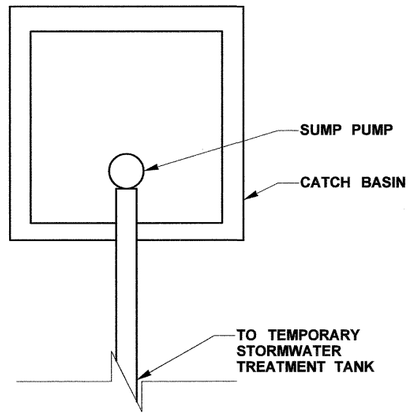

CATCH BASIN TYPE 1 W/ SUMP PUMP

NOT TO SCALE

NOTE:

1. PROVIDE TEMPORARY PUMP AS REQUIRED FOR PUMP DESIGN FLOWS, PUMP SIZE AND PROPER OPERATION. ROUTE THE TEMPORARY PIPING OR HOSES TO MINIMIZE CONFLICTS WITH CONSTRUCTION ACTIVITIES AND VEHICLES. PROVIDE PIPE MATERIALS AND STABILIZATION AS REQUIRED FOR CONDITIONS ENCOUNTERED.

STAGE 1A

SHEET LOCATION	DESIGN FLOW RATE (GPM)
EC1A-2/10	163

STAGE 1B & 2

SHEET LOCATION	DESIGN FLOW RATE (GPM)
EC1A-2/10	113
EC1B-2/16	283
EC1B-2/57	136
EC1B-2/38	155
EC1B-3/4	170

STAGE 3

SHEET LOCATION	DESIGN FLOW RATE (GPM)
EC1A-2/10	283
EC1B-2/38	155
EC1B-3/4	170
EC3-1	171

2. TEMPORARY STORMWATER TREATMENT TANKS, PUMPS HOSES, AND LEVEL SPREADER WILL BE PAID UNDER EROSION/WATER POLLUTION CONTROL FORCE ACCOUNT.

STRUCTURE NOTES - DRAINAGE

NOTE:
THE FIRST NUMBER OF THE "CODE" BELOW REFERS TO THE SHEET NO. OR THE SHEET REFERENCE NO. SHOWING THE CONSTRUCTION FEATURE.

THE SECOND NUMBER REFERS TO THE CONSTRUCTION FEATURE FOUND ON THAT SHEET.

CODE	LOCATION ⮟ \ UNIT OF MEASURE ⮞	REMOVING DRAINAGE STRUCTURE	REMOVING DRAINAGE PIPE	COMMON BORROW INCL. HAUL	GRAVEL BORROW INCL. HAUL		EMBANKMENT COMPACTION	POND EXCAVATION INCL. HAUL	COMPACTED TILL	DITCH EXCAVATION INCL. HAUL			GRATE INLET TYPE 2	QUARRY SPALLS	SCHEDULE A CULV. PIPE 18 IN. DIAM.	SCHEDULE B CULV. PIPE 12 IN. DIAM.	SEE GENERAL NOTES
		EACH	L.F.	C.Y.	TON		C.Y.	C.Y.	C.Y.	C.Y.			EACH	TON	L.F	L.F	
DR1-1	ES 113+37 (21.9 LT) TO ES 113+37 (38.6 LT)																
DR1-2	ES 114+45 (22.1 LT) TO ES 116+50 (29.8 LT)																
DR1-3	ES 116+02 (20.5 LT) TO ES 116+07 (142.5 LT)																
DR1-4	LM 216+03 (68.5 LT) TO ES 116+02 (20.5 LT)												1				4, 5
DR1-5	ES 116+02 (16.9 LT) TO ES 116+04 (47.0 LT)	1	30														1
DR1-6	LM 214+75 (64.4 RT) TO LM 217+24 (64.5 RT)												1				4, 5
DR1-7	LM 214+75 (64.4 RT) TO SW 114+68 (57.1 RT)												1	4.4			4, 5
DR1-8	SE DITCH 1+00 TO SE DITCH 8+84									258				4.2			
DR1-9	SW 115+23 (18.1 LT) TO SW 114+94 (40.5 RT)	1	66														1
DR2-1	ES 119+01 (54.8 LT)	1															1
DR2-2	ES 119+01 (54.8 LT) TO ES 118+75 (107.6 LT)																
DR2-3	LM 218+50 (145.6 LT) TO LM 222+03 (221.6 LT)																
DR2-4	LM 218+13 (80.9 LT)	1															1
DR2-5	LM 218+13 (80.9 LT) TO LM 218+13 (65.5 LT)																
DR2-6	LM 218+13 (65.5 LT) TO LM 220+39 (66.7 LT)																
DR2-7	LM 219+69 (81.5 LT) TO LM 220+40 (66.8 LT)		72														1
DR2-8	LM 220+12 (80.0' LT) TO LM 221+72 (79.6' LT)	1	205														1
DR2-9	ES 121+47 (1.8 RT) TO M 118+36 (48.1 RT)												1				4, 5
DR2-10	M 118+36 (48.1 RT)																
DR2-11	M 117+34 (60.2 RT)																
DR2-12	M 116+70 (60.2 RT)																
DR2-13	M 116+47 (7.2 LT)																
DR2-14	M 116+44 (62.6 LT)																
DR2-15	M 117+37 (74.3 LT)																
DR2-16	M 118+12.62 (45.05 LT)																
DR2-17	M 116+44 (62.6 LT) TO M 116+73 (160.2 LT)													4.4			
DR2-18	NW 125+16 (115.3 LT) TO NW 125+16 (126.2 LT)	1	12														1
DR2-19	LM 224+53 (312.9 LT) TO LM 226+02 (251.1 LT)									555							
DR2-20	LM 226+02 (251.1 LT) TO LM 226+33 (237.7 LT)													4.4			
DR2-21	LM 226+28 (239.7 LT) TO LM 227+51 (203.8 LT)				30		472	634	412								2, A, B
DR2-22	LM 226+28 (223.0 LT) TO LM 226+16 (101.0 LT)													4.2		130	6
DR2-23	LM 226+16 (101.0 LT) TO LM 226+15 (93.1 LT)									2							
	SHEET TOTAL	**6**	**385**		**30**		**472**	**634**	**412**	**815**			**4**	**21.6**		**130**	

GENERAL NOTES:

1. SEE "REMOVING DRAINAGE STRUCTURES AND DRAINAGE PIPE" SPECIAL PROVISIONS.
2. SEE "POND EXCAVATION INCL. HAUL" SPECIAL PROVISIONS.
3. SEE "COMPACTED TILL" SPECIAL PROVISIONS.
4. SEE STD PLAN B-35.40-00 FOR GRATE INLET TYPE 2 DETAIL
5. SEE STD PLAN B-40.40-01 FOR FRAME AND DUAL VANED GRATES FOR GRATE INLET DETAIL
6. SEE STD PLAN B-70.20-00 FOR CULVERT BEVELED END SECTION DETAIL.
7. SEE STD PLAN B-5.40-01 FOR CATCH BASIN TYPE 1L DETAIL.
8. SEE STD PLAN B-5.20-01 FOR CATCH BASIN TYPE 1 DETAIL.
9. SEE STD PLAN B-10.20-01 FOR CATCH BASIN TYPE 2 DETAIL.
10. SEE "CATCH BASIN TYPE 2 48 IN. DIAM. WITH DEBRIS CAGE" SPECIAL PROVISIONS.
11. USE RECTANGULAR VANED GRATE (SEE STD PLAN B-30.30-01).
12. USE RECTANGULAR SOLID METAL COVER (STD PLAN B-30.20-02).
13. USE CIRCULAR FRAME (RING) AND COVER (STD PLAN B-30.70-03).
14. SEE "TOPSOIL TYPE A" SPECIAL PROVISIONS.
15. SEE STD PLAN I-60.20-01 FOR EROSION CONTROL BLANKET PLACEMENT IN CHANNEL DETAIL.
16. USE LOW SURVIVABILITY CLASS B FOR CONSTRUCTION GEOTEXTILE FOR UNDERGROUND DRAINAGE.
17. SEE SHEET DD6 FOR COMPOST AMENDED VEGETATED FILTER STRIP (CAVFS) DETAILS.
18. SEE SHEET DD5 FOR COMPOST AMENDED BIOFILTRATION SWALE (CABS) DETAILS.
19. SEE "INSTALL RECTANGULAR VANED GRATE" SPECIAL PROVISIONS.
20. SEE STD PLAN B-60.20-00 FOR COUPLING BAND DETAIL
21. SEE "LOCKING SOLID METAL COVER AND FRAME FOR CATCH BASIN" SPECIAL PROVISIONS.

ADDITIONAL QUANTITIES

A. "GRAVEL BORROW INCL. HAUL' QUANTITIES ARE PROVIDED IN ROADWAY PROFILES.

B. "EMBANKMENT COMPACTION" QUANTITIES ARE PROVIDED IN ROADWAY PROFILES.

C. "CSBC" AND "HMA" QUANTITIES ARE PROVIDED IN ROADWAY SECTIONS.

D. EXISTING PIPE CAP REMOVAL AND CONNECTION TO EXISTING PIPE ARE INCLUDED IN THE COST OF PIPE

E. "SEEDING, FERTILIZING, AND MULCHING" QUANTITIES ARE PROVIDED IN LANDSCAPING PLANS

F. "STRUCTURE EXCAVATION CLASS B INCL. HAUL" QUANTITIES ARE INCLUDED IN THE SE STRUCTURAL WALL

DESIGNED BY	C. BUITRAGO	
ENTERED BY	T. NABOURS	
CHECKED BY	D. PROCTOR	
APPROVED BY	H. LONGFELLOW	
		DATE

REGION NO.	STATE	FED. AID PROJ. NO.
10	WASH	

JOB NUMBER

CONTRACT NO.

TULALIP TRIBES ©
Parametrix

I-5/ 116TH STREET NE
INTERCHANGE IMPROVEMENTS
PHASE 4 RAMPS

STRUCTURE NOTES - DRAINAGE

DSN1

SHEET 70 OF 238 SHEETS

STRUCTURE NOTES - DRAINAGE

NOTE:
THE FIRST NUMBER OF THE "CODE" BELOW REFERS TO THE SHEET NO. OR THE SHEET REFERENCE NO. SHOWING THE CONSTRUCTION FEATURE.

THE SECOND NUMBER REFERS TO THE CONSTRUCTION FEATURE FOUND ON THAT SHEET.

CODE	LOCATION ⤵ \ UNIT OF MEASURE ➢		CL. V REINF. CONC. CULV. PIPE 18 IN. DIAM.	CATCH BASIN TYPE 1L	CATCH BASIN TYPE 1	CATCH BASIN TYPE 2 48IN. DIAM.	TESTING STORM SEWER PIPE		CL. V REINF. CONC. STORM SEWER PIPE 12 IN. DIAM.	SCHEDULE A STORM SEWER PIPE 12 IN. DIAM.	SCHEDULE A STORM SEWER PIPE 18 IN. DIAM.	SCHEDULE B STORM SEWER PIPE 12 IN. DIAM.		HMA CL. 1/2 PG 64-22	CATCH BASIN TYPE 2 48 IN. DIAM. WITH DEBRIS CAGE	CRUSHED SURFACING BASE COURSE	SEE GENERAL NOTES
			L.F	EACH	EACH	EACH	L.F.		L.F.	L.F.	L.F.	L.F.		TON	EACH	TON	
DR1-1	ES 113+37 (21.9 LT) TO ES 113+37 (38.6 LT)																
DR1-2	ES 114+45 (22.1 LT) TO ES 116+50 (29.8 LT)																
DR1-3	ES 116+02 (20.5 LT) TO ES 116+07 (142.5 LT)																
DR1-4	LM 216+03 (68.5 LT) TO ES 116+02 (20.5 LT)						33			33							
DR1-5	ES 116+02 (16.9 LT) TO ES 116+04 (47.0 LT)																
DR1-6	LM 214+75 (64.4 RT) TO LM 217+24 (64.5 RT)						250		250								
DR1-7	LM 214+75 (64.4 RT) TO SW 114+68 (57.1 RT)						82				82						6
DR1-8	SE DITCH 1+00 TO SE DITCH 8+84																
DR1-9	SW 115+23 (18.1 LT) TO SW 114+94 (40.5 RT)																
DR2-1	ES 119+01 (54.8 LT)																
DR2-2	ES 119+01 (54.8 LT) TO ES 118+75 (107.6 LT)																
DR2-3	LM 218+50 (145.6 LT) TO LM 222+03 (221.6 LT)																
DR2-4	LM 218+13 (80.9 LT)					1											9, 13
DR2-5	LM 218+13 (80.9 LT) TO LM 218+13 (65.5 LT)			1			15				15						7, 11
DR2-6	LM 218+13 (65.5 LT) TO LM 220+39 (66.7 LT)						226		226								
DR2-7	LM 219+69 (81.5 LT) TO LM 220+40 (66.8 LT)																
DR2-8	LM 220+12 (80.0 LT) TO LM 221+72 (79.6 LT)																
DR2-9	ES 121+47 (1.8 RT) TO M 118+36 (48.1 RT)						104			104							
DR2-10	M 118+36 (48.1 RT)																
DR2-11	M 117+34 (60.2 RT)																
DR2-12	M 116+70 (60.2 RT)																
DR2-13	M 116+47 (7.2 LT)																
DR2-14	M 116+44 (62.6 LT)																
DR2-15	M 117+37 (74.3 LT)																
DR2-16	M 118+12.62 (45.05 LT)																
DR2-17	M 116+44 (62.6 LT) TO M 116+73 (160.2 LT)						102			102							6
DR2-18	NW 125+16 (115.3 LT) TO NW 125+16 (126.2 LT)																
DR2-19	LM 224+53 (312.9 LT) TO LM 226+02 (251.1 LT)																
DR2-20	LM 226+02 (251.1 LT) TO LM 226+33 (237.7 LT)		34														6
DR2-21	LM 226+28 (239.7 LT) TO LM 227+51 (203.8 LT)													60		49	C
DR2-22	LM 226+28 (223.0 LT) TO LM 226+16 (101.0 LT)														1		10
DR2-23	LM 226+16 (101.0 LT) TO LM 226+15 (93.1 LT)																
	SHEET TOTAL		34	1		1	812		476	239	97			60	1	49	

GENERAL NOTES:

1. SEE "REMOVING DRAINAGE STRUCTURES AND DRAINAGE PIPE" SPECIAL PROVISIONS.
2. SEE "POND EXCAVATION INCL. HAUL" SPECIAL PROVISIONS.
3. SEE "COMPACTED TILL" SPECIAL PROVISIONS.
4. SEE STD PLAN B-35.40-00 FOR GRATE INLET TYPE 2 DETAIL
5. SEE STD PLAN B-40.40-01 FOR FRAME AND DUAL VANED GRATES FOR GRATE INLET DETAIL
6. SEE STD PLAN B-70.20-00 FOR CULVERT BEVELED END SECTION DETAIL.
7. SEE STD PLAN B-5.40-01 FOR CATCH BASIN TYPE 1L DETAIL.
8. SEE STD PLAN B-5.20-01 FOR CATCH BASIN TYPE 1 DETAIL.
9. SEE STD PLAN B-10.20-01 FOR CATCH BASIN TYPE 2 DETAIL.
10. SEE "CATCH BASIN TYPE 2 48 IN. DIAM. WITH DEBRIS CAGE" SPECIAL PROVISIONS.
11. USE RECTANGULAR VANED GRATE (SEE STD PLAN B-30.30-01).
12. USE RECTANGULAR SOLID METAL COVER (STD PLAN B-30.20-02).
13. USE CIRCULAR FRAME (RING) AND COVER (STD PLAN B-30.70-03).
14. SEE "TOPSOIL TYPE A" SPECIAL PROVISIONS.
15. SEE STD PLAN I-60.20-01 FOR EROSION CONTROL BLANKET PLACEMENT IN CHANNEL DETAIL.
16. USE LOW SURVIVABILITY CLASS B FOR CONSTRUCTION GEOTEXTILE FOR UNDERGROUND DRAINAGE.
17. SEE SHEET DD6 FOR COMPOST AMENDED VEGETATED FILTER STRIP (CAVFS) DETAILS.
18. SEE SHEET DD5 FOR COMPOST AMENDED BIOFILTRATION SWALE (CABS) DETAILS.
19. SEE "INSTALL RECTANGULAR VANED GRATE" SPECIAL PROVISIONS.
20. SEE STD PLAN B-60.20-00 FOR COUPLING BAND DETAIL
21. SEE "LOCKING SOLID METAL COVER AND FRAME FOR CATCH BASIN" SPECIAL PROVISIONS.

ADDITIONAL QUANTITIES

A. "GRAVEL BORROW INCL. HAUL' QUANTITIES ARE PROVIDED IN ROADWAY PROFILES.

B. "EMBANKMENT COMPACTION" QUANTITIES ARE PROVIDED IN ROADWAY PROFILES.

C. "CSBC" AND "HMA" QUANTITIES ARE PROVIDED IN ROADWAY SECTIONS.

D. EXISTING PIPE CAP REMOVAL AND CONNECTION TO EXISTING PIPE ARE INCLUDED IN THE COST OF PIPE

E. "SEEDING, FERTILIZING, AND MULCHING" QUANTITIES ARE PROVIDED IN LANDSCAPING PLANS

F. "STRUCTURE EXCAVATION CLASS B INCL. HAUL" QUANTITIES ARE INCLUDED IN THE SE STRUCTURAL WALL

DESIGNED BY	C. BUITRAGO
ENTERED BY	T. NABOURS
CHECKED BY	D. PROCTOR
APPROVED BY	H. LONGFELLOW

REGION NO.	STATE	FED. AID PROJ. NO.
10	WASH	

JOB NUMBER

CONTRACT NO.

TULALIP TRIBES ©
Parametrix

I-5/ 116TH STREET NE
INTERCHANGE IMPROVEMENTS
PHASE 4 RAMPS

STRUCTURE NOTES - DRAINAGE

DSN2

SHEET 71 OF 238 SHEETS

STRUCTURE NOTES - DRAINAGE

NOTE:
THE FIRST NUMBER OF THE "CODE" BELOW REFERS TO THE SHEET NO. OR THE SHEET REFERENCE NO. SHOWING THE CONSTRUCTION FEATURE.

THE SECOND NUMBER REFERS TO THE CONSTRUCTION FEATURE FOUND ON THAT SHEET.

CODE	LOCATION ⤵ \ UNIT OF MEASURE ➢	COMPOST BLANKET	TOPSOIL TYPE A	SEEDING, FERTILIZING, AND MULCHING	BIODEGRADABLE EROSION CONTROL BLANKET		STRUCTURE EXCAVATION CLASS B INCL. HAUL	SHORING OR EXTRA EXCAVATION CLASS B	PLUGGING EXISTING PIPE	CONNECTION TO EXISTING DRAINAGE STRUCTURE	ADJUST CATCH BASIN	INSTALL RECTANGULAR VANED GRATE	LOCKING SOLIDE METAL COVER AND FRAME FOR CATCH BASIN	CLEANING EXISTING DRAINAGE STRUCTURE	CONSTRUCTION GEOTEXTILE FOR DITCH LINING	CONSTRUCTION GEOTEXTILE FOR UNDERGROUND DRAINAGE	SEE GENERAL NOTES
		S.Y.	C.Y.	AC.	S.Y.		C.Y.	S.F.	EACH	EACH	EACH	EACH	EACH	L.S.	S.Y.	S.Y.	
DR1-1	ES 113+37 (21.9 LT) TO ES 113+37 (38.6 LT)													2			
DR1-2	ES 114+45 (22.1 LT) TO ES 116+50 (29.8 LT)		76	0.05													14, E
DR1-3	ES 116+02 (20.5 LT) TO ES 116+07 (142.5 LT)										1		1	2			12, 21
DR1-4	LM 216+03 (68.5 LT) TO ES 116+02 (20.5 LT)						30	220		1							F
DR1-5	ES 116+02 (16.9 LT) TO ES 116+04 (47.0 LT)																
DR1-6	LM 214+75 (64.4 RT) TO LM 217+24 (64.5 RT)						139	1191									F
DR1-7	LM 214+75 (64.4 RT) TO SW 114+68 (57.1 RT)						55	491							10		F
DR1-8	SE DITCH 1+00 TO SE DITCH 8+84				816										10		15
DR1-9	SW 115+23 (18.1 LT) TO SW 114+94 (40.5 RT)																
DR2-1	ES 119+01 (54.8 LT)																
DR2-2	ES 119+01 (54.8 LT) TO ES 118+75 (107.6 LT)								1								
DR2-3	LM 218+50 (145.6 LT) TO LM 222+03 (221.6 LT)		478	0.30													14, 17, E
DR2-4	LM 218+13 (80.9 LT)						13	53									F
DR2-5	LM 218+13 (80.9 LT) TO LM 218+13 (65.5 LT)						16	125									F
DR2-6	LM 218+13 (65.5 LT) TO LM 220+39 (66.7 LT)						117	1262		1							F
DR2-7	LM 219+69 (81.5 LT) TO LM 220+40 (66.8 LT)																
DR2-8	LM 220+12 (80.0' LT) TO LM 221+72 (79.6' LT)																
DR2-9	ES 121+47 (1.8 RT) TO M 118+36 (48.1 RT)						27			1							
DR2-10	M 118+36 (48.1 RT)											1					11, 19
DR2-11	M 117+34 (60.2 RT)											1					11, 19
DR2-12	M 116+70 (60.2 RT)											1					11, 19
DR2-13	M 116+47 (7.2 LT)											1					11, 19
DR2-14	M 116+44 (62.6 LT)											1					11, 19
DR2-15	M 117+37 (74.3 LT)											1					11, 19
DR2-16	M 118+12.62 (45.05 LT)											1					11, 19
DR2-17	M 116+44 (62.6 LT) TO M 116+73 (160.2 LT)						74	571		1					10		F
DR2-18	NW 125+16 (115.3 LT) TO NW 125+16 (126.2 LT)																
DR2-19	LM 224+53 (312.9 LT) TO LM 226+02 (251.1 LT)	64	41		550												14, 18, E
DR2-20	LM 226+02 (251.1 LT) TO LM 226+33 (237.7 LT)						15								10		F
DR2-21	LM 226+28 (239.7 LT) TO LM 227+51 (203.8 LT)																
DR2-22	LM 226+28 (223.0 LT) TO LM 226+16 (101.0 LT)				6		58	56									15, F
DR2-23	LM 226+16 (101.0 LT) TO LM 226+15 (93.1 LT)														10		
	SHEET TOTAL	64	595	0.35	1372		544	3969	1	4	1	7	1	4	50		

GENERAL NOTES:

1. SEE "REMOVING DRAINAGE STRUCTURES AND DRAINAGE PIPE" SPECIAL PROVISIONS.
2. SEE "POND EXCAVATION INCL. HAUL" SPECIAL PROVISIONS.
3. SEE "COMPACTED TILL" SPECIAL PROVISIONS.
4. SEE STD PLAN B-35.40-00 FOR GRATE INLET TYPE 2 DETAIL
5. SEE STD PLAN B-40.40-01 FOR FRAME AND DUAL VANED GRATES FOR GRATE INLET DETAIL
6. SEE STD PLAN B-70.20-00 FOR CULVERT BEVELED END SECTION DETAIL.
7. SEE STD PLAN B-5.40-01 FOR CATCH BASIN TYPE 1L DETAIL.
8. SEE STD PLAN B-5.20-01 FOR CATCH BASIN TYPE 1 DETAIL.
9. SEE STD PLAN B-10.20-01 FOR CATCH BASIN TYPE 2 DETAIL.
10. SEE "CATCH BASIN TYPE 2 48 IN. DIAM. WITH DEBRIS CAGE" SPECIAL PROVISIONS.
11. USE RECTANGULAR VANED GRATE (SEE STD PLAN B-30.30-01).
12. USE RECTANGULAR SOLID METAL COVER (STD PLAN B-30.20-02).
13. USE CIRCULAR FRAME (RING) AND COVER (STD PLAN B-30.70-03).
14. SEE "TOPSOIL TYPE A" SPECIAL PROVISIONS.
15. SEE STD PLAN I-60.20-01 FOR EROSION CONTROL BLANKET PLACEMENT IN CHANNEL DETAIL.
16. USE LOW SURVIVABILITY CLASS B FOR CONSTRUCTION GEOTEXTILE FOR UNDERGROUND DRAINAGE.
17. SEE SHEET DD6 FOR COMPOST AMENDED VEGETATED FILTER STRIP (CAVFS) DETAILS.
18. SEE SHEET DD5 FOR COMPOST AMENDED BIOFILTRATION SWALE (CABS) DETAILS.
19. SEE "INSTALL RECTANGULAR VANED GRATE" SPECIAL PROVISIONS.
20. SEE STD PLAN B-60.20-00 FOR COUPLING BAND DETAIL
21. SEE "LOCKING SOLID METAL COVER AND FRAME FOR CATCH BASIN" SPECIAL PROVISIONS.

ADDITIONAL QUANTITIES

A. "GRAVEL BORROW INCL. HAUL' QUANTITIES ARE PROVIDED IN ROADWAY PROFILES.

B. "EMBANKMENT COMPACTION" QUANTITIES ARE PROVIDED IN ROADWAY PROFILES.

C. "CSBC" AND "HMA" QUANTITIES ARE PROVIDED IN ROADWAY SECTIONS.

D. EXISTING PIPE CAP REMOVAL AND CONNECTION TO EXISTING PIPE ARE INCLUDED IN THE COST OF PIPE

E. "SEEDING, FERTILIZING, AND MULCHING" QUANTITIES ARE PROVIDED IN LANDSCAPING PLANS

F. "STRUCTURE EXCAVATION CLASS B INCL. HAUL" QUANTITIES ARE INCLUDED IN THE SE STRUCTURAL WALL

DESIGNED BY	C. BUITRAGO
ENTERED BY	T. NABOURS
CHECKED BY	D. PROCTOR
APPROVED BY	H. LONGFELLOW

REGION NO.	STATE	FED. AID PROJ. NO.
10	WASH	

JOB NUMBER

CONTRACT NO.

TULALIP TRIBES ©
Parametrix

I-5/ 116TH STREET NE
INTERCHANGE IMPROVEMENTS
PHASE 4 RAMPS

STRUCTURE NOTES - DRAINAGE

DSN3

SHEET 72 OF 238 SHEETS

STRUCTURE NOTES - DRAINAGE

NOTE:
THE FIRST NUMBER OF THE "CODE" BELOW REFERS TO THE SHEET NO. OR THE SHEET REFERENCE NO. SHOWING THE CONSTRUCTION FEATURE.

THE SECOND NUMBER REFERS TO THE CONSTRUCTION FEATURE FOUND ON THAT SHEET.

CODE	LOCATION ⤵ \ UNIT OF MEASURE ➢	REMOVING DRAINAGE STRUCTURE	REMOVING DRAINAGE PIPE	COMMON BORROW INCL. HAUL	GRAVEL BORROW INCL. HAUL		EMBANKMENT COMPACTION	POND EXCAVATION INCL. HAUL	COMPACTED TILL	DITCH EXCAVATION INCL. HAUL			GRATE INLET TYPE 2	QUARRY SPALLS	SCHEDULE A CULV. PIPE 18 IN. DIAM.	SCHEDULE B CULV. PIPE 12 IN. DIAM.	SEE GENERAL NOTES
		EACH	L.F.	C.Y.	TON		C.Y.	C.Y.	C.Y.	C.Y.			EACH	TON	L.F	L.F	
DR2-24	LM 225+01 (83.2 LT) TO 226+15 (93.1 LT)									27				4.2			
DR2-25	LM 223+91 (80.0 LT) TO LM 225+12 (75.0 LT)	1	100														1
DR2-26	NE 124+20 (3.2 RT) TO NE 124+42 (54.8 LT)																
DR2-27	NE 124+42 (54.8 LT) TO NE 124+12 (76.1 LT)																
DR2-28	LM 224+33 (169.8 LT) TO LM 229+95 (105.1 LT)																
DR2-29	NE 127+83 (37.9 LT) TO NE 127+97 (72.4 LT)	1	37														1
DR2-30	LM 217+24 (64.5 RT) TO LM 220+06 (66.7 RT)																
DR2-31	LM 219+77 (79.6 RT) TO LM 220+06 (66.6 RT)		31														1
DR2-32	LM 220+00 (75.0 RT) TO LM 221+38 (79.3 RT)	1	165														1
DR2-33	SW 121+02 (1.8 LT) TO SW 120+82 (65.4 RT)												1				4, 5
DR2-34	SW 120+82 (65.4' RT) TO SW 119+23 (47.3 RT)																
DR2-35	SW 119+18 (46.9 RT) TO SW 119+16 (63.0 RT)																
DR2-36	SW 119+16 (63.0 RT) TO SE 120+07 (28.7 RT)																
DR2-37	SE 120+07 (28.7 RT) TO SE 120+39 (46.8 RT)													4.2			
DR2-38	SW 121+05 (74.3 RT) TO SW 120+82 (65.4 RT)																
DR2-39	M 121+72 (45.3 RT)																
DR2-40	M 121+64 (48.4 LT)																
DR2-41	LM 223+59 (79.3 RT) TO LM 224+90 (75.0 RT)	1	100														1
DR2-42	WN 123+87 (3.2 LT) TO WN 124+08 (3.2 LT)																
DR2-43	WN 124+08 (3.2 LT) TO WN 124+29 (3.2 LT)																
DR2-44	WN 124+29 (3.2 LT) TO WN 124+34 (47.2 RT)																
DR2-45	WN 123+90 (64.6 RT) TO WN 124+34 (47.2 RT)																
DR2-46	WN 124+34 (47.2 RT) TO WN 125+49 (42.7 RT)																
DR2-47	WN 125+49 (42.7 RT) TO WN 126+86 (33.3 RT)																
DR2-48	WN 126+86 (33.3 RT) TO WN 126+85 (56.9 RT)												1				4, 5
DR2-49	WN 126+85 (56.9 RT) TO WN 126+18 (94.0 RT)				137		74							4.2			A, B
DR2-50	LM 226+21 (209.5 RT) TO LM 225+24 (258.2 RT)			14			13			211				4.2			B
DR2-51	LM 223+07 (344.4 RT) TO LM 225+24 (258.2 RT)							4597									2, A, B
DR2-52	WN 124+72 (123.6 RT) TO LM 224+84 (66.7 RT)																
DR2-53	LM 226+97 (141.6 RT) TO LM 230+01 (101.2 RT)																
DR2-54	SW 116+64 (49.1 RT) TO SW 117+43 (76.2 RT)	1	84														1
DR2-55	SE DITCH 2+51 TO SE DITCH 3+59													4.2	108		6
	SHEET TOTAL	**5**	**517**	**14**	**137**		**87**	**4597**		**238**			**2**	**21.0**	**108**		

GENERAL NOTES:

1. SEE "REMOVING DRAINAGE STRUCTURES AND DRAINAGE PIPE" SPECIAL PROVISIONS.
2. SEE "POND EXCAVATION INCL. HAUL" SPECIAL PROVISIONS.
3. SEE "COMPACTED TILL" SPECIAL PROVISIONS.
4. SEE STD PLAN B-35.40-00 FOR GRATE INLET TYPE 2 DETAIL
5. SEE STD PLAN B-40.40-01 FOR FRAME AND DUAL VANED GRATES FOR GRATE INLET DETAIL
6. SEE STD PLAN B-70.20-00 FOR CULVERT BEVELED END SECTION DETAIL.
7. SEE STD PLAN B-5.40-01 FOR CATCH BASIN TYPE 1L DETAIL.
8. SEE STD PLAN B-5.20-01 FOR CATCH BASIN TYPE 1 DETAIL.
9. SEE STD PLAN B-10.20-01 FOR CATCH BASIN TYPE 2 DETAIL.
10. SEE "CATCH BASIN TYPE 2 48 IN. DIAM. WITH DEBRIS CAGE" SPECIAL PROVISIONS.
11. USE RECTANGULAR VANED GRATE (SEE STD PLAN B-30.30-01).
12. USE RECTANGULAR SOLID METAL COVER (STD PLAN B-30.20-02).
13. USE CIRCULAR FRAME (RING) AND COVER (STD PLAN B-30.70-03).
14. SEE "TOPSOIL TYPE A" SPECIAL PROVISIONS.
15. SEE STD PLAN I-60.20-01 FOR EROSION CONTROL BLANKET PLACEMENT IN CHANNEL DETAIL.
16. USE LOW SURVIVABILITY CLASS B FOR CONSTRUCTION GEOTEXTILE FOR UNDERGROUND DRAINAGE.
17. SEE SHEET DD6 FOR COMPOST AMENDED VEGETATED FILTER STRIP (CAVFS) DETAILS.
18. SEE SHEET DD5 FOR COMPOST AMENDED BIOFILTRATION SWALE (CABS) DETAILS.
19. SEE "INSTALL RECTANGULAR VANED GRATE" SPECIAL PROVISIONS.
20. SEE STD PLAN B-60.20-00 FOR COUPLING BAND DETAIL
21. SEE "LOCKING SOLID METAL COVER AND FRAME FOR CATCH BASIN" SPECIAL PROVISIONS.

ADDITIONAL QUANTITIES

A. "GRAVEL BORROW INCL. HAUL' QUANTITIES ARE PROVIDED IN ROADWAY PROFILES.

B. "EMBANKMENT COMPACTION" QUANTITIES ARE PROVIDED IN ROADWAY PROFILES.

C. "CSBC" AND "HMA" QUANTITIES ARE PROVIDED IN ROADWAY SECTIONS.

D. EXISTING PIPE CAP REMOVAL AND CONNECTION TO EXISTING PIPE ARE INCLUDED IN THE COST OF PIPE

E. "SEEDING, FERTILIZING, AND MULCHING" QUANTITIES ARE PROVIDED IN LANDSCAPING PLANS

F. "STRUCTURE EXCAVATION CLASS B INCL. HAUL" QUANTITIES ARE INCLUDED IN THE SE STRUCTURAL WALL

DESIGNED BY	C. BUITRAGO	
ENTERED BY	T. NABOURS	
CHECKED BY	D. PROCTOR	
APPROVED BY	H. LONGFELLOW	
		DATE

REGION NO.	STATE	FED. AID PROJ. NO.
10	WASH	
JOB NUMBER		
CONTRACT NO.		

TULALIP TRIBES ©
Parametrix

I-5/ 116TH STREET NE
INTERCHANGE IMPROVEMENTS
PHASE 4 RAMPS

STRUCTURE NOTES - DRAINAGE

DSN4

SHEET 73 OF 238 SHEETS

STRUCTURE NOTES - DRAINAGE

NOTE:
THE FIRST NUMBER OF THE "CODE" BELOW REFERS TO THE SHEET NO. OR THE SHEET REFERENCE NO. SHOWING THE CONSTRUCTION FEATURE.

THE SECOND NUMBER REFERS TO THE CONSTRUCTION FEATURE FOUND ON THAT SHEET.

CODE	LOCATION ⮟ \ UNIT OF MEASURE ⮞		CL. V REINF. CONC. CULV. PIPE 18 IN. DIAM.	CATCH BASIN TYPE 1L	CATCH BASIN TYPE 1	CATCH BASIN TYPE 2 48IN. DIAM.	TESTING STORM SEWER PIPE		CL. V REINF. CONC. STORM SEWER PIPE 12 IN. DIAM.	SCHEDULE A STORM SEWER PIPE 12 IN. DIAM.	SCHEDULE A STORM SEWER PIPE 18 IN. DIAM.	SCHEDULE B STORM SEWER PIPE 12 IN. DIAM.		HMA CL. 1/2 PG 64-22	CATCH BASIN TYPE 2 48 IN. DIAM. WITH DEBRIS CAGE	CRUSHED SURFACING BASE COURSE	SEE GENERAL NOTES
			L.F	EACH	EACH	EACH	L.F.		L.F.	L.F.	L.F.	L.F.		TON	EACH	TON	
DR2-24	LM 225+01 (83.2 LT) TO 226+15 (93.1 LT)																
DR2-25	LM 223+91 (80.0 LT) TO LM 225+12 (75.0 LT)																
DR2-26	NE 124+20 (3.2 RT) TO NE 124+42 (54.8 LT)				1		62			62							8, 11
DR2-27	NE 124+42 (54.8 LT) TO NE 124+12 (76.1 LT)				1		44			44							8, 11, D
DR2-28	LM 224+33 (169.8 LT) TO LM 229+95 (105.1 LT)																
DR2-29	NE 127+83 (37.9 LT) TO NE 127+97 (72.4 LT)																
DR2-30	LM 217+24 (64.5 RT) TO LM 220+06 (66.7 RT)						281		281								
DR2-31	LM 219+77 (79.6 RT) TO LM 220+06 (66.6 RT)																
DR2-32	LM 220+00 (75.0 RT) TO LM 221+38 (79.3 RT)																
DR2-33	SW 121+02 (1.8 LT) TO SW 120+82 (65.4 RT)						71			71							
DR2-34	SW 120+82 (65.4' RT) TO SW 119+23 (47.3 RT)					1	183			183							9, 11
DR2-35	SW 119+23 (47.3 RT) TO SW 119+22 (62.3 RT)					1	15			15							9, 11
DR2-36	SW 119+22 (62.3 RT) TO SE 120+07 (28.7 RT)				1		89			89							8, 12
DR2-37	SE 120+07 (28.7 RT) TO SE 120+39 (46.8 RT)				1		37			37							6, 8, 12
DR2-38	SW 121+05 (74.3 RT) TO SW 120+82 (65.4 RT)						30			30							D
DR2-39	M 121+72 (45.3 RT)																
DR2-40	M 121+64 (48.4 LT)																
DR2-41	LM 223+59 (79.3 RT) TO LM 224+90 (75.0 RT)																
DR2-42	WN 123+87 (3.2 LT) TO WN 124+08 (3.2 LT)				1		20			20							8, 11
DR2-43	WN 124+08 (3.2 LT) TO WN 124+29 (3.2 LT)				1		20			20							8, 11
DR2-44	WN 124+29 (3.2 LT) TO WN 124+34 (47.2 RT)				1		51			51							8, 11
DR2-45	WN 123+90 (64.6 RT) TO WN 124+34 (47.2 RT)						63			63							D
DR2-46	WN 124+34 (47.2 RT) TO WN 125+49 (42.7 RT)				1		126			126							8, 11
DR2-47	WN 125+49 (42.7 RT) TO WN 126+86 (33.3 RT)				1		138			138							8, 11
DR2-48	WN 126+86 (33.3 RT) TO WN 126+85 (56.9 RT)						24			24							
DR2-49	WN 126+85 (56.9 RT) TO WN 126+18 (94.0 RT)				1		79			79							6, 8, 12
DR2-50	LM 226+21 (209.5 RT) TO LM 225+24 (258.2 RT)																
DR2-51	LM 223+07 (344.4 RT) TO LM 225+24 (258.2 RT)													146		120	C
DR2-52	WN 124+72 (123.6 RT) TO LM 224+84 (66.7 RT)						180					180			1		10
DR2-53	LM 226+97 (141.6 RT) TO LM 230+01 (101.2 RT)																
DR2-54	SW 116+64 (49.1 RT) TO SW 117+43 (76.2 RT)																
DR2-55	SE DITCH 2+51 TO SE DITCH 3+59																
	SHEET TOTAL				10	2	1513		281	1052		180		146	1	120	

GENERAL NOTES:

1. SEE "REMOVING DRAINAGE STRUCTURES AND DRAINAGE PIPE" SPECIAL PROVISIONS.
2. SEE "POND EXCAVATION INCL. HAUL" SPECIAL PROVISIONS.
3. SEE "COMPACTED TILL" SPECIAL PROVISIONS.
4. SEE STD PLAN B-35.40-00 FOR GRATE INLET TYPE 2 DETAIL
5. SEE STD PLAN B-40.40-01 FOR FRAME AND DUAL VANED GRATES FOR GRATE INLET DETAIL
6. SEE STD PLAN B-70.20-00 FOR CULVERT BEVELED END SECTION DETAIL.
7. SEE STD PLAN B-5.40-01 FOR CATCH BASIN TYPE 1L DETAIL.
8. SEE STD PLAN B-5.20-01 FOR CATCH BASIN TYPE 1 DETAIL.
9. SEE STD PLAN B-10.20-01 FOR CATCH BASIN TYPE 2 DETAIL.
10. SEE "CATCH BASIN TYPE 2 48 IN. DIAM. WITH DEBRIS CAGE" SPECIAL PROVISIONS.
11. USE RECTANGULAR VANED GRATE (SEE STD PLAN B-30.30-01).
12. USE RECTANGULAR SOLID METAL COVER (STD PLAN B-30.20-02).
13. USE CIRCULAR FRAME (RING) AND COVER (STD PLAN B-30.70-03).
14. SEE "TOPSOIL TYPE A" SPECIAL PROVISIONS.
15. SEE STD PLAN I-60.20-01 FOR EROSION CONTROL BLANKET PLACEMENT IN CHANNEL DETAIL.
16. USE LOW SURVIVABILITY CLASS B FOR CONSTRUCTION GEOTEXTILE FOR UNDERGROUND DRAINAGE.
17. SEE SHEET DD6 FOR COMPOST AMENDED VEGETATED FILTER STRIP (CAVFS) DETAILS.
18. SEE SHEET DD5 FOR COMPOST AMENDED BIOFILTRATION SWALE (CABS) DETAILS.
19. SEE "INSTALL RECTANGULAR VANED GRATE" SPECIAL PROVISIONS.
20. SEE STD PLAN B-60.20-00 FOR COUPLING BAND DETAIL
21. SEE "LOCKING SOLID METAL COVER AND FRAME FOR CATCH BASIN" SPECIAL PROVISIONS.

ADDITIONAL QUANTITIES

A. "GRAVEL BORROW INCL. HAUL' QUANTITIES ARE PROVIDED IN ROADWAY PROFILES.

B. "EMBANKMENT COMPACTION" QUANTITIES ARE PROVIDED IN ROADWAY PROFILES.

C. "CSBC" AND "HMA" QUANTITIES ARE PROVIDED IN ROADWAY SECTIONS.

D. EXISTING PIPE CAP REMOVAL AND CONNECTION TO EXISTING PIPE ARE INCLUDED IN THE COST OF PIPE

E. "SEEDING, FERTILIZING, AND MULCHING" QUANTITIES ARE PROVIDED IN LANDSCAPING PLANS

F. "STRUCTURE EXCAVATION CLASS B INCL. HAUL" QUANTITIES ARE INCLUDED IN THE SE STRUCTURAL WALL

DESIGNED BY	C. BUITRAGO
ENTERED BY	T. NABOURS
CHECKED BY	D. PROCTOR
APPROVED BY	H. LONGFELLOW

REGION NO.	STATE	FED. AID PROJ. NO.
10	WASH	

JOB NUMBER

CONTRACT NO.

TULALIP TRIBES ©
Parametrix

I-5/ 116TH STREET NE
INTERCHANGE IMPROVEMENTS
PHASE 4 RAMPS

STRUCTURE NOTES - DRAINAGE

DSN5

STRUCTURE NOTES - DRAINAGE

NOTE:
THE FIRST NUMBER OF THE "CODE" BELOW REFERS TO THE SHEET NO. OR THE SHEET REFERENCE NO. SHOWING THE CONSTRUCTION FEATURE.

THE SECOND NUMBER REFERS TO THE CONSTRUCTION FEATURE FOUND ON THAT SHEET.

CODE	LOCATION ⤵ \ UNIT OF MEASURE ➢	COMPOST BLANKET S.Y.	TOPSOIL TYPE A C.Y.	SEEDING, FERTILIZING, AND MULCHING AC.	BIODEGRADABLE EROSION CONTROL BLANKET S.Y.		STRUCTURE EXCAVATION CLASS B INCL. HAUL C.Y.	SHORING OR EXTRA EXCAVATION CLASS B S.F.	PLUGGING EXISTING PIPE EACH	CONNECTION TO EXISTING DRAINAGE STRUCTURE EACH	ADJUST CATCH BASIN EACH	INSTALL RECTANGULAR VANED GRATE EACH	LOCKING SOLIDE METAL COVER AND FRAME FOR CATCH BASIN EACH	CLEANING EXISTING DRAINAGE STRUCTURE L.S.	CONSTRUCTION GEOTEXTILE FOR DITCH LINING S.Y.	CONSTRUCTION GEOTEXTILE FOR UNDERGROUND DRAINAGE S.Y.	SEE GENERAL NOTES
DR2-24	LM 225+01 (83.2 LT) TO 226+15 (93.1 LT)				106										10		15
DR2-25	LM 223+91 (80.0 LT) TO LM 225+12 (75.0 LT)																
DR2-26	NE 124+20 (3.2 RT) TO NE 124+42 (54.8 LT)																
DR2-27	NE 124+42 (54.8 LT) TO NE 124+12 (76.1 LT)																
DR2-28	LM 224+33 (169.8 LT) TO LM 229+95 (105.1 LT)		463	0.29													14, 17, E
DR2-29	NE 127+83 (37.9 LT) TO NE 127+97 (72.4 LT)																
DR2-30	LM 217+24 (64.5 RT) TO LM 220+06 (66.7 RT)						133			1							F
DR2-31	LM 219+77 (79.6 RT) TO LM 220+06 (66.6 RT)																
DR2-32	LM 220+00 (75.0 RT) TO LM 221+38 (79.3 RT)																
DR2-33	SW 121+02 (1.8 LT) TO SW 120+82 (65.4 RT)																
DR2-34	SW 120+82 (65.4' RT) TO SW 119+23 (47.3 RT)																
DR2-35	SW 119+18 (46.9 RT) TO SW 119+16 (63.0 RT)																
DR2-36	SW 119+16 (63.0 RT) TO SE 120+07 (28.7 RT)																
DR2-37	SE 120+07 (28.7 RT) TO SE 120+39 (46.8 RT)														10		
DR2-38	SW 121+05 (74.3 RT) TO SW 120+82 (65.4 RT)																
DR2-39	M 121+72 (45.3 RT)											1					11, 19
DR2-40	M 121+64 (48.4 LT)											1					11, 19
DR2-41	LM 223+59 (79.3 RT) TO LM 224+90 (75.0 RT)																
DR2-42	WN 123+87 (3.2 LT) TO WN 124+08 (3.2 LT)																
DR2-43	WN 124+08 (3.2 LT) TO WN 124+29 (3.2 LT)																
DR2-44	WN 124+29 (3.2 LT) TO WN 124+34 (47.2 RT)																
DR2-45	WN 123+90 (64.6 RT) TO WN 124+34 (47.2 RT)																
DR2-46	WN 124+34 (47.2 RT) TO WN 125+49 (42.7 RT)																
DR2-47	WN 125+49 (42.7 RT) TO WN 126+86 (33.3 RT)						50										F
DR2-48	WN 126+86 (33.3 RT) TO WN 126+85 (56.9 RT)						9										F
DR2-49	WN 126+85 (56.9 RT) TO WN 126+18 (94.0 RT)						3								10		F
DR2-50	LM 226+21 (209.5 RT) TO LM 225+24 (258.2 RT)	36	28		284										10		14, 18, E
DR2-51	LM 223+07 (344.4 RT) TO LM 225+24 (258.2 RT)																
DR2-52	WN 124+72 (123.6 RT) TO LM 224+84 (66.7 RT)						105	1310		1							F
DR2-53	LM 226+97 (141.6 RT) TO LM 230+01 (101.2 RT)		193	0.12													14, 17, E
DR2-54	SW 116+64 (49.1 RT) TO SW 117+43 (76.2 RT)																
DR2-55	SE DITCH 2+51 TO SE DITCH 3+59						49								10		F
	SHEET TOTAL	36	684	0.41	390		349	1310		2		2			50		

GENERAL NOTES:

1. SEE "REMOVING DRAINAGE STRUCTURES AND DRAINAGE PIPE" SPECIAL PROVISIONS.
2. SEE "POND EXCAVATION INCL. HAUL" SPECIAL PROVISIONS.
3. SEE "COMPACTED TILL" SPECIAL PROVISIONS.
4. SEE STD PLAN B-35.40-00 FOR GRATE INLET TYPE 2 DETAIL
5. SEE STD PLAN B-40.40-01 FOR FRAME AND DUAL VANED GRATES FOR GRATE INLET DETAIL
6. SEE STD PLAN B-70.20-00 FOR CULVERT BEVELED END SECTION DETAIL.
7. SEE STD PLAN B-5.40-01 FOR CATCH BASIN TYPE 1L DETAIL.
8. SEE STD PLAN B-5.20-01 FOR CATCH BASIN TYPE 1 DETAIL.
9. SEE STD PLAN B-10.20-01 FOR CATCH BASIN TYPE 2 DETAIL.
10. SEE "CATCH BASIN TYPE 2 48 IN. DIAM. WITH DEBRIS CAGE" SPECIAL PROVISIONS.
11. USE RECTANGULAR VANED GRATE (SEE STD PLAN B-30.30-01).
12. USE RECTANGULAR SOLID METAL COVER (STD PLAN B-30.20-02).
13. USE CIRCULAR FRAME (RING) AND COVER (STD PLAN B-30.70-03).
14. SEE "TOPSOIL TYPE A" SPECIAL PROVISIONS.
15. SEE STD PLAN I-60.20-01 FOR EROSION CONTROL BLANKET PLACEMENT IN CHANNEL DETAIL.
16. USE LOW SURVIVABILITY CLASS B FOR CONSTRUCTION GEOTEXTILE FOR UNDERGROUND DRAINAGE.
17. SEE SHEET DD6 FOR COMPOST AMENDED VEGETATED FILTER STRIP (CAVFS) DETAILS.
18. SEE SHEET DD5 FOR COMPOST AMENDED BIOFILTRATION SWALE (CABS) DETAILS.
19. SEE "INSTALL RECTANGULAR VANED GRATE" SPECIAL PROVISIONS.
20. SEE STD PLAN B-60.20-00 FOR COUPLING BAND DETAIL
21. SEE "LOCKING SOLID METAL COVER AND FRAME FOR CATCH BASIN" SPECIAL PROVISIONS.

ADDITIONAL QUANTITIES

A. "GRAVEL BORROW INCL. HAUL' QUANTITIES ARE PROVIDED IN ROADWAY PROFILES.

B. "EMBANKMENT COMPACTION" QUANTITIES ARE PROVIDED IN ROADWAY PROFILES.

C. "CSBC" AND "HMA" QUANTITIES ARE PROVIDED IN ROADWAY SECTIONS.

D. EXISTING PIPE CAP REMOVAL AND CONNECTION TO EXISTING PIPE ARE INCLUDED IN THE COST OF PIPE

E. "SEEDING, FERTILIZING, AND MULCHING" QUANTITIES ARE PROVIDED IN LANDSCAPING PLANS

F. "STRUCTURE EXCAVATION CLASS B INCL. HAUL" QUANTITIES ARE INCLUDED IN THE SE STRUCTURAL WALL

DESIGNED BY	C. BUITRAGO
ENTERED BY	T. NABOURS
CHECKED BY	D. PROCTOR
APPROVED BY	H. LONGFELLOW

REGION NO.	STATE	FED. AID PROJ. NO.
10	WASH	

JOB NUMBER

CONTRACT NO.

TULALIP TRIBES ©
Parametrix

I-5/ 116TH STREET NE
INTERCHANGE IMPROVEMENTS
PHASE 4 RAMPS

STRUCTURE NOTES - DRAINAGE

DSN6

STRUCTURE NOTES - DRAINAGE

NOTE:
THE FIRST NUMBER OF THE "CODE" BELOW REFERS TO THE SHEET NO. OR THE SHEET REFERENCE NO. SHOWING THE CONSTRUCTION FEATURE.

THE SECOND NUMBER REFERS TO THE CONSTRUCTION FEATURE FOUND ON THAT SHEET.

CODE	LOCATION ⤵ \ UNIT OF MEASURE ➢	REMOVING DRAINAGE STRUCTURE	REMOVING DRAINAGE PIPE	COMMON BORROW INCL. HAUL	GRAVEL BORROW INCL. HAUL		EMBANKMENT COMPACTION	POND EXCAVATION INCL. HAUL	COMPACTED TILL	DITCH EXCAVATION INCL. HAUL			GRATE INLET TYPE 2	QUARRY SPALLS	SCHEDULE A CULV. PIPE 18 IN. DIAM.	SCHEDULE B CULV. PIPE 12 IN. DIAM.	SEE GENERAL NOTES
		EACH	L.F.	C.Y.	TON		C.Y.	C.Y.	C.Y.	C.Y.			EACH	TON	L.F	L.F	
DR2-56	SW 117+43 (76.2 RT) TO SW 118+38 (101.6 RT)	1	100														1
DR2-57	SW 118+38 (101.6 RT) TO 118+99 (130.4 RT)		70														1
DR2-58	SE 119+82 (146.19 RT)													15.2			
DR2-59	LM 218+52 (203.6 RT) TO LM 221+93 (313.6 RT)				767		1697	7089	1282					34.8			2, 3, A, B
DR2-60	M 124+46 (40.8 RT) TO M 123+06 (104.1 RT)													4.2			
DR2-61	M 123+76 (77.7 RT) TO M 124+33 (92.0 RT)	1	59														1
DR2-62	M 123+07 (60.2 LT)																
DR2-63	M 123+81 (60.2 LT)																
DR3-1	LM 230+01 (105.2 RT)																
DR3-2	NE 129+95 (38.3 LT) TO NE 129+95 (45.1 LT)														7		6, 20
DR3-3	LM 230+01 (101.2 RT) TO LM 235+15 (85.0 RT)																
DR4-1	M 115+74 (59.0 RT)	1															1
DR4-2	M 115+74 (59.0 RT) TO M 115+47 (84.5 RT)																
DR5-1	M 124+44 (60.2 LT)																
DR5-2	M 124+45 (5.9 RT)																
DR5-3	M 124+46 (40.8 RT)																
DR5-4	M 125+43 (39.5 RT)																
	SHEET TOTAL	3	229		767		1697	7089	1282					54.2	7		
	PROJECT TOTAL	14	1,131	14	934		2,256	12,320	1,694	1,053			6	97	115	130	

GENERAL NOTES:

1. SEE "REMOVING DRAINAGE STRUCTURES AND DRAINAGE PIPE" SPECIAL PROVISIONS.
2. SEE "POND EXCAVATION INCL. HAUL" SPECIAL PROVISIONS.
3. SEE "COMPACTED TILL" SPECIAL PROVISIONS.
4. SEE STD PLAN B-35.40-00 FOR GRATE INLET TYPE 2 DETAIL
5. SEE STD PLAN B-40.40-01 FOR FRAME AND DUAL VANED GRATES FOR GRATE INLET DETAIL
6. SEE STD PLAN B-70.20-00 FOR CULVERT BEVELED END SECTION DETAIL.
7. SEE STD PLAN B-5.40-01 FOR CATCH BASIN TYPE 1L DETAIL.
8. SEE STD PLAN B-5.20-01 FOR CATCH BASIN TYPE 1 DETAIL.
9. SEE STD PLAN B-10.20-01 FOR CATCH BASIN TYPE 2 DETAIL.
10. SEE "CATCH BASIN TYPE 2 48 IN. DIAM. WITH DEBRIS CAGE" SPECIAL PROVISIONS.
11. USE RECTANGULAR VANED GRATE (SEE STD PLAN B-30.30-01).
12. USE RECTANGULAR SOLID METAL COVER (STD PLAN B-30.20-02).
13. USE CIRCULAR FRAME (RING) AND COVER (STD PLAN B-30.70-03).
14. SEE "TOPSOIL TYPE A" SPECIAL PROVISIONS.
15. SEE STD PLAN I-60.20-01 FOR EROSION CONTROL BLANKET PLACEMENT IN CHANNEL DETAIL.
16. USE LOW SURVIVABILITY CLASS B FOR CONSTRUCTION GEOTEXTILE FOR UNDERGROUND DRAINAGE.
17. SEE SHEET DD6 FOR COMPOST AMENDED VEGETATED FILTER STRIP (CAVFS) DETAILS.
18. SEE SHEET DD5 FOR COMPOST AMENDED BIOFILTRATION SWALE (CABS) DETAILS.
19. SEE "INSTALL RECTANGULAR VANED GRATE" SPECIAL PROVISIONS.
20. SEE STD PLAN B-60.20-00 FOR COUPLING BAND DETAIL
21. SEE "LOCKING SOLID METAL COVER AND FRAME FOR CATCH BASIN" SPECIAL PROVISIONS.

ADDITIONAL QUANTITIES

A. "GRAVEL BORROW INCL. HAUL' QUANTITIES ARE PROVIDED IN ROADWAY PROFILES.

B. "EMBANKMENT COMPACTION" QUANTITIES ARE PROVIDED IN ROADWAY PROFILES.

C. "CSBC" AND "HMA" QUANTITIES ARE PROVIDED IN ROADWAY SECTIONS.

D. EXISTING PIPE CAP REMOVAL AND CONNECTION TO EXISTING PIPE ARE INCLUDED IN THE COST OF PIPE

E. "SEEDING, FERTILIZING, AND MULCHING" QUANTITIES ARE PROVIDED IN LANDSCAPING PLANS

F. "STRUCTURE EXCAVATION CLASS B INCL. HAUL" QUANTITIES ARE INCLUDED IN THE SE STRUCTURAL WALL

DESIGNED BY	C. BUITRAGO	
ENTERED BY	T. NABOURS	
CHECKED BY	D. PROCTOR	
APPROVED BY	H. LONGFELLOW	
		DATE

REGION NO.	STATE	FED. AID PROJ. NO.
10	WASH	
JOB NUMBER		
CONTRACT NO.		

TULALIP TRIBES ©
Parametrix

I-5/ 116TH STREET NE
INTERCHANGE IMPROVEMENTS
PHASE 4 RAMPS

STRUCTURE NOTES - DRAINAGE

DSN7

SHEET 76 OF 238 SHEETS

STRUCTURE NOTES - DRAINAGE

NOTE:
THE FIRST NUMBER OF THE "CODE" BELOW REFERS TO THE SHEET NO. OR THE SHEET REFERENCE NO. SHOWING THE CONSTRUCTION FEATURE.

THE SECOND NUMBER REFERS TO THE CONSTRUCTION FEATURE FOUND ON THAT SHEET.

CODE	LOCATION ⤵ \ UNIT OF MEASURE ➢		CL. V REINF. CONC. CULV. PIPE 18 IN. DIAM.	CATCH BASIN TYPE 1L	CATCH BASIN TYPE 1	CATCH BASIN TYPE 2 48IN. DIAM.	TESTING STORM SEWER PIPE		CL. V REINF. CONC. STORM SEWER PIPE 12 IN. DIAM.	SCHEDULE A STORM SEWER PIPE 12 IN. DIAM.	SCHEDULE A STORM SEWER PIPE 18 IN. DIAM.	SCHEDULE B STORM SEWER PIPE 12 IN. DIAM.		HMA CL. 1/2 PG 64-22	CATCH BASIN TYPE 2 48 IN. DIAM. WITH DEBRIS CAGE	CRUSHED SURFACING BASE COURSE	SEE GENERAL NOTES
			L.F	EACH	EACH	EACH	L.F.		L.F.	L.F.	L.F.	L.F.		TON	EACH	TON	
DR2-56	SW 117+43 (76.2 RT) TO SW 118+38 (101.6 RT)																
DR2-57	SW 118+38 (101.6 RT) TO 118+99 (130.4 RT)																
DR2-58	SE 119+82 (146.19 RT)																
DR2-59	LM 218+52 (203.6 RT) TO LM 221+93 (313.6 RT)													174		57	C
DR2-60	M 124+46 (40.8 RT) TO M 123+06 (104.1 RT)						154					154					6
DR2-61	M 123+76 (77.7 RT) TO M 124+33 (92.0 RT)																
DR2-62	M 123+07 (60.2 LT)																
DR2-63	M 123+81 (60.2 LT)																
DR3-1	LM 230+01 (105.2 RT)																
DR3-2	NE 129+95 (38.3 LT) TO NE 129+95 (45.1 LT)																
DR3-3	LM 230+01 (101.2 RT) TO LM 235+15 (85.0 RT)																
DR4-1	M 115+74 (59.0 RT)																
DR4-2	M 115+74 (59.0 RT) TO M 115+47 (84.5 RT)																
DR5-1	M 124+44 (60.2 LT)																
DR5-2	M 124+45 (5.9 RT)																
DR5-3	M 124+46 (40.8 RT)																
DR5-4	M 125+43 (39.5 RT)																
	SHEET TOTAL						154					154		174		57	
	PROJECT TOTAL		34	1	10	3	2,479		757	1,291	97	334		380	2	226	

GENERAL NOTES:

1. SEE "REMOVING DRAINAGE STRUCTURES AND DRAINAGE PIPE" SPECIAL PROVISIONS.
2. SEE "POND EXCAVATION INCL. HAUL" SPECIAL PROVISIONS.
3. SEE "COMPACTED TILL" SPECIAL PROVISIONS.
4. SEE STD PLAN B-35.40-00 FOR GRATE INLET TYPE 2 DETAIL
5. SEE STD PLAN B-40.40-01 FOR FRAME AND DUAL VANED GRATES FOR GRATE INLET DETAIL
6. SEE STD PLAN B-70.20-00 FOR CULVERT BEVELED END SECTION DETAIL.
7. SEE STD PLAN B-5.40-01 FOR CATCH BASIN TYPE 1L DETAIL.
8. SEE STD PLAN B-5.20-01 FOR CATCH BASIN TYPE 1 DETAIL.
9. SEE STD PLAN B-10.20-01 FOR CATCH BASIN TYPE 2 DETAIL.
10. SEE "CATCH BASIN TYPE 2 48 IN. DIAM. WITH DEBRIS CAGE" SPECIAL PROVISIONS.
11. USE RECTANGULAR VANED GRATE (SEE STD PLAN B-30.30-01).
12. USE RECTANGULAR SOLID METAL COVER (STD PLAN B-30.20-02).
13. USE CIRCULAR FRAME (RING) AND COVER (STD PLAN B-30.70-03).
14. SEE "TOPSOIL TYPE A" SPECIAL PROVISIONS.
15. SEE STD PLAN I-60.20-01 FOR EROSION CONTROL BLANKET PLACEMENT IN CHANNEL DETAIL.
16. USE LOW SURVIVABILITY CLASS B FOR CONSTRUCTION GEOTEXTILE FOR UNDERGROUND DRAINAGE.
17. SEE SHEET DD6 FOR COMPOST AMENDED VEGETATED FILTER STRIP (CAVFS) DETAILS.
18. SEE SHEET DD5 FOR COMPOST AMENDED BIOFILTRATION SWALE (CABS) DETAILS.
19. SEE "INSTALL RECTANGULAR VANED GRATE" SPECIAL PROVISIONS.
20. SEE STD PLAN B-60.20-00 FOR COUPLING BAND DETAIL
21. SEE "LOCKING SOLID METAL COVER AND FRAME FOR CATCH BASIN" SPECIAL PROVISIONS.

ADDITIONAL QUANTITIES

A. "GRAVEL BORROW INCL. HAUL' QUANTITIES ARE PROVIDED IN ROADWAY PROFILES.

B. "EMBANKMENT COMPACTION" QUANTITIES ARE PROVIDED IN ROADWAY PROFILES.

C. "CSBC" AND "HMA" QUANTITIES ARE PROVIDED IN ROADWAY SECTIONS.

D. EXISTING PIPE CAP REMOVAL AND CONNECTION TO EXISTING PIPE ARE INCLUDED IN THE COST OF PIPE

E. "SEEDING, FERTILIZING, AND MULCHING" QUANTITIES ARE PROVIDED IN LANDSCAPING PLANS

F. "STRUCTURE EXCAVATION CLASS B INCL. HAUL" QUANTITIES ARE INCLUDED IN THE SE STRUCTURAL WALL

DESIGNED BY	C. BUITRAGO	
ENTERED BY	T. NABOURS	
CHECKED BY	D. PROCTOR	
APPROVED BY	H. LONGFELLOW	
		DATE

REGION NO.	STATE	FED. AID PROJ. NO.
10	WASH	

JOB NUMBER

CONTRACT NO.

TULALIP TRIBES ©
Parametrix

I-5/ 116TH STREET NE
INTERCHANGE IMPROVEMENTS
PHASE 4 RAMPS

STRUCTURE NOTES - DRAINAGE

DSN8

STRUCTURE NOTES - DRAINAGE

NOTE:
THE FIRST NUMBER OF THE "CODE" BELOW REFERS TO THE SHEET NO. OR THE SHEET REFERENCE NO. SHOWING THE CONSTRUCTION FEATURE.

THE SECOND NUMBER REFERS TO THE CONSTRUCTION FEATURE FOUND ON THAT SHEET.

CODE	LOCATION ⊽ \ UNIT OF MEASURE ⊳	COMPOST BLANKET	TOPSOIL TYPE A	SEEDING, FERTILIZING, AND MULCHING	BIODEGRADABLE EROSION CONTROL BLANKET		STRUCTURE EXCAVATION CLASS B INCL. HAUL	SHORING OR EXTRA EXCAVATION CLASS B	PLUGGING EXISTING PIPE	CONNECTION TO EXISTING DRAINAGE STRUCTURE	ADJUST CATCH BASIN	INSTALL RECTANGULAR VANED GRATE	LOCKING SOLIDE METAL COVER AND FRAME FOR CATCH BASIN	CLEANING EXISTING DRAINAGE STRUCTURE	CONSTRUCTION GEOTEXTILE FOR DITCH LINING	CONSTRUCTION GEOTEXTILE FOR UNDERGROUND DRAINAGE	SEE GENERAL NOTES
		S.Y.	C.Y.	AC.	S.Y.		C.Y.	S.F.	EACH	EACH	EACH	EACH	EACH	L.S.	S.Y	S.Y.	
DR2-56	SW 117+43 (76.2 RT) TO SW 118+38 (101.6 RT)																
DR2-57	SW 118+38 (101.6 RT) TO 118+99 (130.4 RT)																
DR2-58	SE 119+82 (146.19 RT)															30	16
DR2-59	LM 218+52 (203.6 RT) TO LM 221+93 (313.6 RT)															70	16
DR2-60	M 124+46 (40.8 RT) TO M 123+06 (104.1 RT)						198	1531		1					10		F
DR2-61	M 123+76 (77.7 RT) TO M 124+33 (92.0 RT)																
DR2-62	M 123+07 (60.2 LT)											1					11,19
DR2-63	M 123+81 (60.2 LT)											1					11,19
DR3-1	LM 230+01 (105.2 RT)								1								
DR3-2	NE 129+95 (38.3 LT) TO NE 129+95 (45.1 LT)						3										F
DR3-3	LM 230+01 (101.2 RT) TO LM 235+15 (85.0 RT)		400	0.25													14, 18, E
DR4-1	M 115+74 (59.0 RT)																
DR4-2	M 115+74 (59.0 RT) TO M 115+47 (84.5 RT)								1								
DR5-1	M 124+44 (60.2 LT)											1					11,19
DR5-2	M 124+45 (5.9 RT)											1					11,19
DR5-3	M 124+46 (40.8 RT)											1					11,19
DR5-4	M 125+43 (39.5 RT)											1					11,19
	SHEET TOTAL		400	0.25			201	1531	2	1		6			10	100	
	PROJECT TOTAL	100	1,679	1.0	1,762		1,094	6,810	3	7	1	15	1	4	110	100	

GENERAL NOTES:

1. SEE "REMOVING DRAINAGE STRUCTURES AND DRAINAGE PIPE" SPECIAL PROVISIONS.
2. SEE "POND EXCAVATION INCL. HAUL" SPECIAL PROVISIONS.
3. SEE "COMPACTED TILL" SPECIAL PROVISIONS.
4. SEE STD PLAN B-35.40-00 FOR GRATE INLET TYPE 2 DETAIL
5. SEE STD PLAN B-40.40-01 FOR FRAME AND DUAL VANED GRATES FOR GRATE INLET DETAIL
6. SEE STD PLAN B-70.20-00 FOR CULVERT BEVELED END SECTION DETAIL.
7. SEE STD PLAN B-5.40-01 FOR CATCH BASIN TYPE 1L DETAIL.
8. SEE STD PLAN B-5.20-01 FOR CATCH BASIN TYPE 1 DETAIL.
9. SEE STD PLAN B-10.20-01 FOR CATCH BASIN TYPE 2 DETAIL.
10. SEE "CATCH BASIN TYPE 2 48 IN. DIAM. WITH DEBRIS CAGE" SPECIAL PROVISIONS.
11. USE RECTANGULAR VANED GRATE (SEE STD PLAN B-30.30-01).
12. USE RECTANGULAR SOLID METAL COVER (STD PLAN B-30.20-02).
13. USE CIRCULAR FRAME (RING) AND COVER (STD PLAN B-30.70-03).
14. SEE "TOPSOIL TYPE A" SPECIAL PROVISIONS.
15. SEE STD PLAN I-60.20-01 FOR EROSION CONTROL BLANKET PLACEMENT IN CHANNEL DETAIL.
16. USE LOW SURVIVABILITY CLASS B FOR CONSTRUCTION GEOTEXTILE FOR UNDERGROUND DRAINAGE.
17. SEE SHEET DD6 FOR COMPOST AMENDED VEGETATED FILTER STRIP (CAVFS) DETAILS.
18. SEE SHEET DD5 FOR COMPOST AMENDED BIOFILTRATION SWALE (CABS) DETAILS.
19. SEE "INSTALL RECTANGULAR VANED GRATE" SPECIAL PROVISIONS.
20. SEE STD PLAN B-60.20-00 FOR COUPLING BAND DETAIL
21. SEE "LOCKING SOLID METAL COVER AND FRAME FOR CATCH BASIN" SPECIAL PROVISIONS.

ADDITIONAL QUANTITIES

A. "GRAVEL BORROW INCL. HAUL' QUANTITIES ARE PROVIDED IN ROADWAY PROFILES.

B. "EMBANKMENT COMPACTION" QUANTITIES ARE PROVIDED IN ROADWAY PROFILES.

C. "CSBC" AND "HMA" QUANTITIES ARE PROVIDED IN ROADWAY SECTIONS.

D. EXISTING PIPE CAP REMOVAL AND CONNECTION TO EXISTING PIPE ARE INCLUDED IN THE COST OF PIPE

E. "SEEDING, FERTILIZING, AND MULCHING" QUANTITIES ARE PROVIDED IN LANDSCAPING PLANS

F. "STRUCTURE EXCAVATION CLASS B INCL. HAUL" QUANTITIES ARE INCLUDED IN THE SE STRUCTURAL WALL

DESIGNED BY	C. BUITRAGO
ENTERED BY	T. NABOURS
CHECKED BY	D. PROCTOR
APPROVED BY	H. LONGFELLOW

REGION NO.	STATE	FED. AID PROJ. NO.
10	WASH	

JOB NUMBER

CONTRACT NO.

TULALIP TRIBES ©
Parametrix

I-5/ 116TH STREET NE
INTERCHANGE IMPROVEMENTS
PHASE 4 RAMPS

STRUCTURE NOTES - DRAINAGE

DSN9

SHEET 78 OF 238 SHEETS

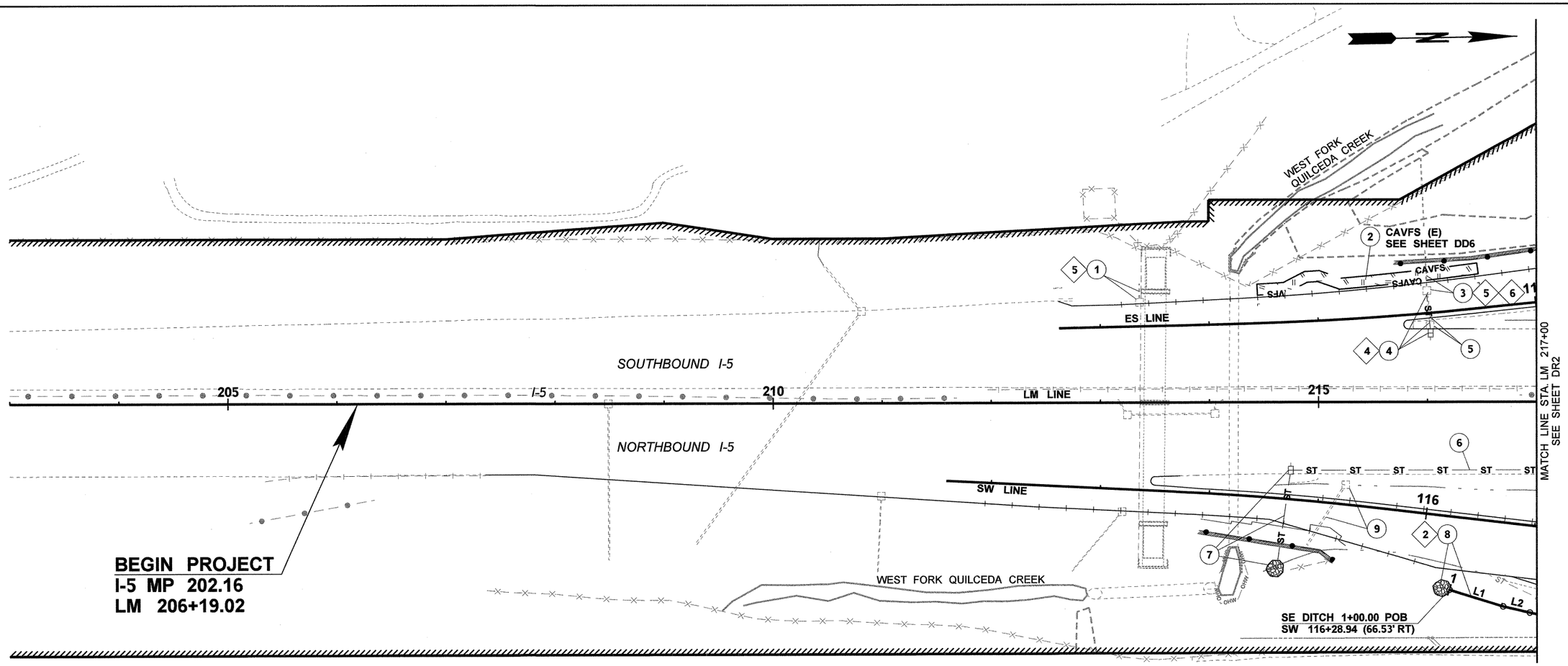

LEGEND

- (1) STRUCTURE NOTE CODE
- (7 / DR2) STRUCTURE NOTE CODE CONTINUED
- STREAM EDGE
- EXISTING DITCH BOTTOM
- EXISTING CATCH BASIN
- EXISTING SEWER MANHOLE
- EXISTING SANITARY SEWER
- EXISTING CULVERT
- DITCH BOTTOM
- ST — ST STORM SEWER LINE
- CULVERT
- COMPOST AMENDED BIOFILTRATION SWALE (CABS)
- COMPOST AMENDED VEGETATED FILTER STRIP (CAVFS)
- BUFFER
- CATCH BASIN TYPE 1
- GRATE INLET TYPE 2
- CATCH BASIN TYPE 2
- CATCH BASIN TYPE 1L
- CATCH BASIN TYPE 2 W/ JAILHOUSE GRATE
- SOIL BORING
- QUARRY SPALLS OUTFALL PROTECTION

0 50 100
SCALE IN FEET

SE DITCH LINE TABLE

LINE	LENGTH	BEARING
L1	51.56'	N18°10'06.9"E
L2	25.01'	N13°36'32.9"E

CONSTRUCTION NOTES:

1. ROAD APPROACH, SEE SHEET DD6.
2. V-DITCH, SEE SHEET DD6.
3. REMOVE EXISTING PIPE CAP AND CONNECT TO CULVERT PIPE, SEE WSDOT STANDARD PLAN B-60.20-00. USE COUPLING OPTION.
4. CONNECTION TO DRAINAGE STRUCTURE
5. CLEANING EXISTING DRAINAGE STRUCTURE
6. ADJUST CATCH BASIN
7. COMPOST AMENDED BIOFILTRATION SWALES (CABS) AND INFILTRATION PONDS ARE TO REMAIN OFFLINE UNTIL VEGETATION IS ESTABLISHED

FILE NAME	U:\PSO\Projects\Clients\1598-TulalipTribes\554-1598-095 116th-Ph4-PSE\99Svcs\CADD\DGN\PS&ESheets\BL1598033_PS_DR.dgn
TIME	12:27:56 PM
DATE	8/28/2017
PLOTTED BY	purgabut
DESIGNED BY	C. BUITRAGO
ENTERED BY	T. NABOURS
CHECKED BY	D. PROCTOR
APPROVED BY	H. LONGFELLOW

REVISION | DATE | BY

REGION NO.	STATE	FED.AID PROJ.NO.
10	WASH	
JOB NUMBER		
CONTRACT NO.		LOCATION NO.

P.E. STAMP BOX — DATE

CRAIG ALEXANDER BUITRAGO, STATE OF WASHINGTON, 49427, REGISTERED PROFESSIONAL ENGINEER
08-29-2017
P.E. STAMP BOX — DATE

TULALIP TRIBES
Parametrix

I-5 / 116TH STREET NE INTERCHANGE IMPROVEMENTS PHASE 4 RAMPS

DRAINAGE PLAN

Plot 2
PLAN REF NO DR1
SHEET 79 OF 238 SHEETS

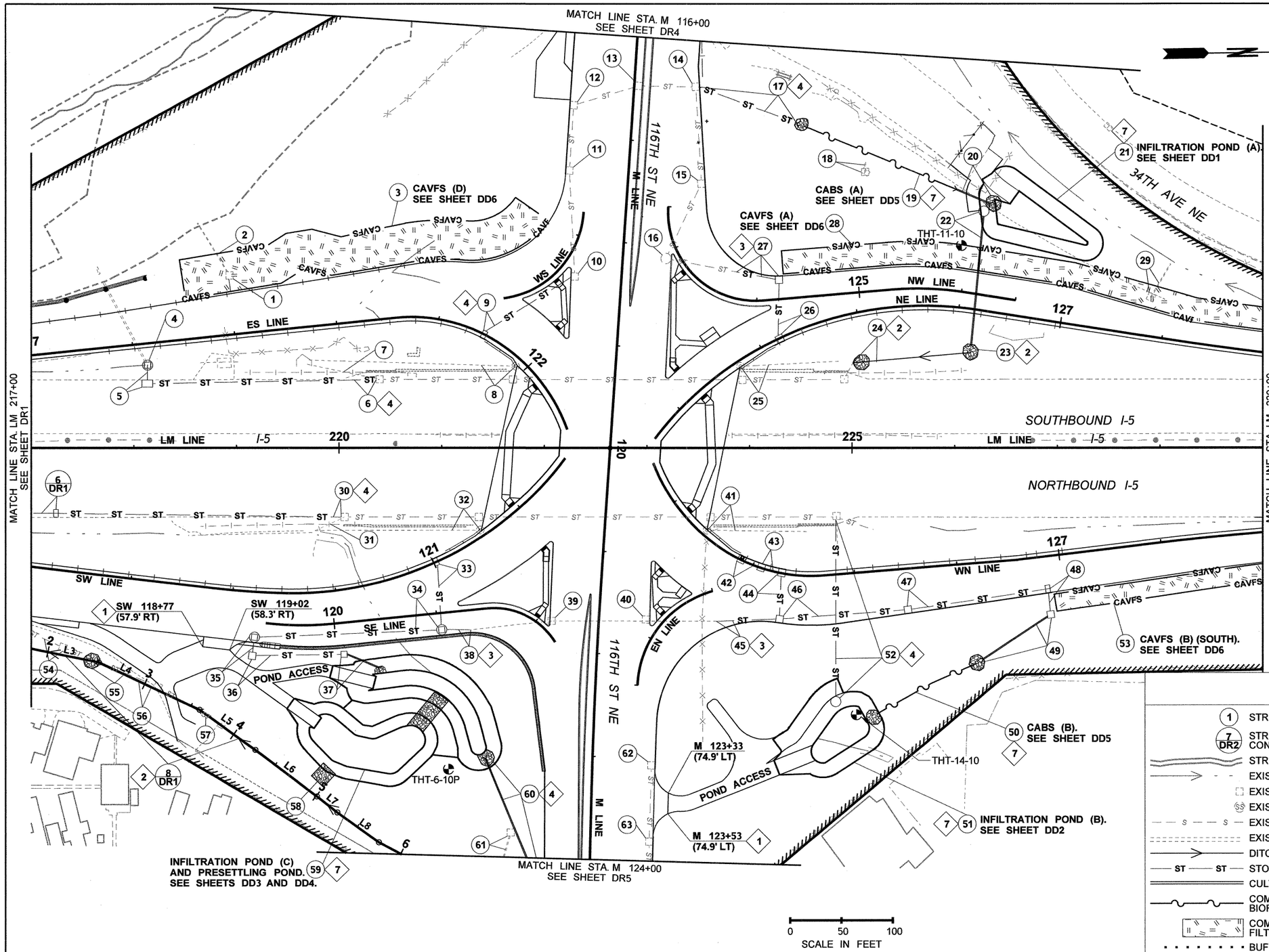

CONSTRUCTION NOTES:

1. ROAD APPROACH, SEE SHEET DD6.
2. V-DITCH, SEE SHEET DD6.
3. REMOVE EXISTING PIPE CAP AND CONNECT TO CULVERT PIPE, SEE WSDOT STANDARD PLAN B-60.20-00. USE COUPLING OPTION.
4. CONNECTION TO DRAINAGE STRUCTURE
5. CLEANING DRAINAGE STRUCTURE
6. ADJUST CATCH BASIN
7. COMPOST AMENDED BIOFILTRATION SWALES (CABS) AND INFILTRATION PONDS ARE TO REMAIN OFFLINE UNTIL VEGETATION IS ESTABLISHED

SE DITCH LINE TABLE

LINE	LENGTH	BEARING
L3	74.04'	N12°34'55.9"E
L4	108.41'	N25°55'19.5"E
L5	66.80'	N36°28'07.5"E
L6	75.02'	N37°49'44.1"E
L7	25.08'	N38°44'30.0"E
L8	50.05'	N36°34'07.2"E

LEGEND

- STRUCTURE NOTE CODE
- STRUCTURE NOTE CODE CONTINUED
- STREAM EDGE
- EXISTING DITCH BOTTOM
- EXISTING CATCH BASIN
- EXISTING SEWER MANHOLE
- EXISTING SANITARY SEWER
- EXISTING CULVERT
- DITCH BOTTOM
- STORM SEWER LINE
- CULVERT
- COMPOST AMENDED BIOFILTRATION SWALE (CABS)
- COMPOST AMENDED VEGETATED FILTER STRIP (CAVFS)
- BUFFER
- CATCH BASIN TYPE 1
- GRATE INLET TYPE 2
- CATCH BASIN TYPE 2
- CATCH BASIN TYPE 1L
- CATCH BASIN TYPE 2 W/ JAILHOUSE GRATE
- SOIL BORING
- QUARRY SPALLS OUTFALL PROTECTION

FILE NAME	U:\PSO\Projects\Clients\1598-TulalipTribes\554-1598-095 116th-Ph4-PSE\99Svcs\CADD\DGN\PS&ESheets\BL1598033_PS_DR.dgn
TIME	12:28:12 PM
DATE	8/28/2017
PLOTTED BY	purgabut
DESIGNED BY	C. BUITRAGO
ENTERED BY	T. NABOURS
CHECKED BY	D. PROCTOR
APPROVED BY	H. LONGFELLOW

REVISION	DATE	BY

REGION NO.	STATE	FED.AID PROJ.NO.
10	WASH	
JOB NUMBER		
CONTRACT NO.		LOCATION NO.

P.E. STAMP BOX — DATE

P.E. STAMP BOX — 08-29-2017 DATE

TULALIP TRIBES
Parametrix

I-5 / 116TH STREET NE INTERCHANGE IMPROVEMENTS PHASE 4 RAMPS

DRAINAGE PLAN

Plot 3

PLAN REF NO DR2

SHEET 80 OF 238 SHEETS

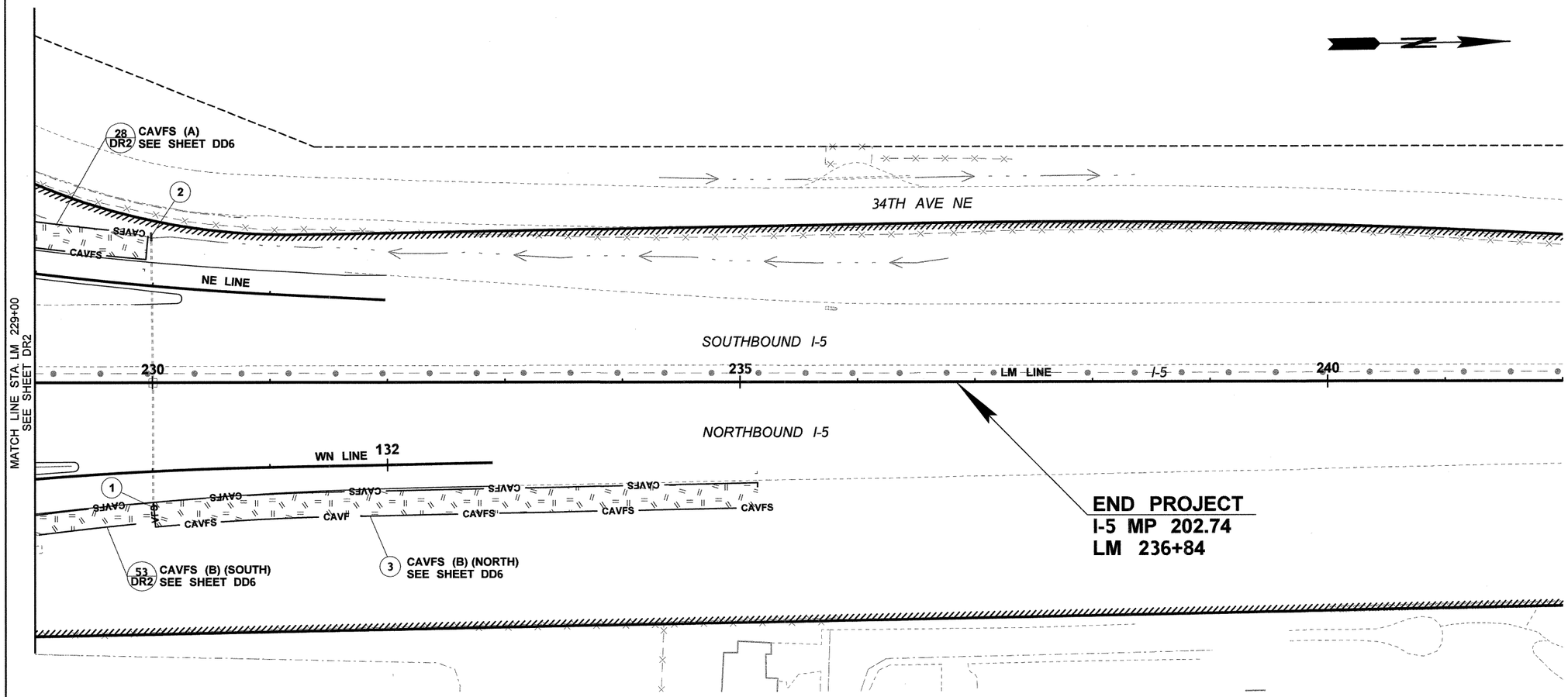

CONSTRUCTION NOTES:

1. ROAD APPROACH, SEE SHEET DD6.
2. V-DITCH, SEE SHEET DD6.
3. REMOVE EXISTING PIPE CAP AND CONNECT TO CULVERT PIPE, SEE WSDOT STANDARD PLAN B-60.20-00. USE COUPLING OPTION.
4. CONNECTION TO DRAINAGE STRUCTURE
5. CLEANING DRAINAGE STRUCTURE
6. ADJUST CATCH BASIN
7. COMPOST AMENDED BIOFILTRATION SWALES (CABS) AND INFILTRATION PONDS ARE TO REMAIN OFFLINE UNTIL VEGETATION IS ESTABLISHED

LEGEND

- (1) STRUCTURE NOTE CODE
- (7 DR2) STRUCTURE NOTE CODE CONTINUED
- STREAM EDGE
- EXISTING DITCH BOTTOM
- EXISTING CATCH BASIN
- EXISTING SEWER MANHOLE
- EXISTING SANITARY SEWER
- EXISTING CULVERT
- DITCH BOTTOM
- ST — ST STORM SEWER LINE
- CULVERT
- COMPOST AMENDED BIOFILTRATION SWALE (CABS)
- COMPOST AMENDED VEGETATED FILTER STRIP (CAVFS)
- BUFFER
- CATCH BASIN TYPE 1
- GRATE INLET TYPE 2
- CATCH BASIN TYPE 2
- CATCH BASIN TYPE 1L
- CATCH BASIN TYPE 2 W/ JAILHOUSE GRATE
- SOIL BORING
- QUARRY SPALLS OUTFALL PROTECTION

0 50 100
SCALE IN FEET

FILE NAME	U:\PSO\Projects\Clients\1598-TulalipTribes\554-1598-095 116th-Ph4-PSE\99Svcs\CADD\DGN\PS&ESheets\BL1598033_PS_DR.dgn					
TIME	12:28:23 PM				REGION NO. 10	STATE WASH	FED.AID PROJ.NO.
DATE	8/28/2017					
PLOTTED BY	purgabut				JOB NUMBER	
DESIGNED BY	C. BUITRAGO					
ENTERED BY	T. NABOURS					
CHECKED BY	D. PROCTOR				CONTRACT NO.	LOCATION NO.
APPROVED BY	H. LONGFELLOW					
		REVISION	DATE	BY		

DATE
P.E. STAMP BOX

STATE OF WASHINGTON — OLYSSIO ALEXANDER BUITRAGO — 51422 — REGISTERED PROFESSIONAL ENGINEER
08-29-2017
DATE
P.E. STAMP BOX

TULALIP TRIBES
Parametrix

I-5 / 116TH STREET NE
INTERCHANGE IMPROVEMENTS
PHASE 4 RAMPS

DRAINAGE PLAN

Plot 4
PLAN REF NO
DR3
SHEET 81 OF 238 SHEETS

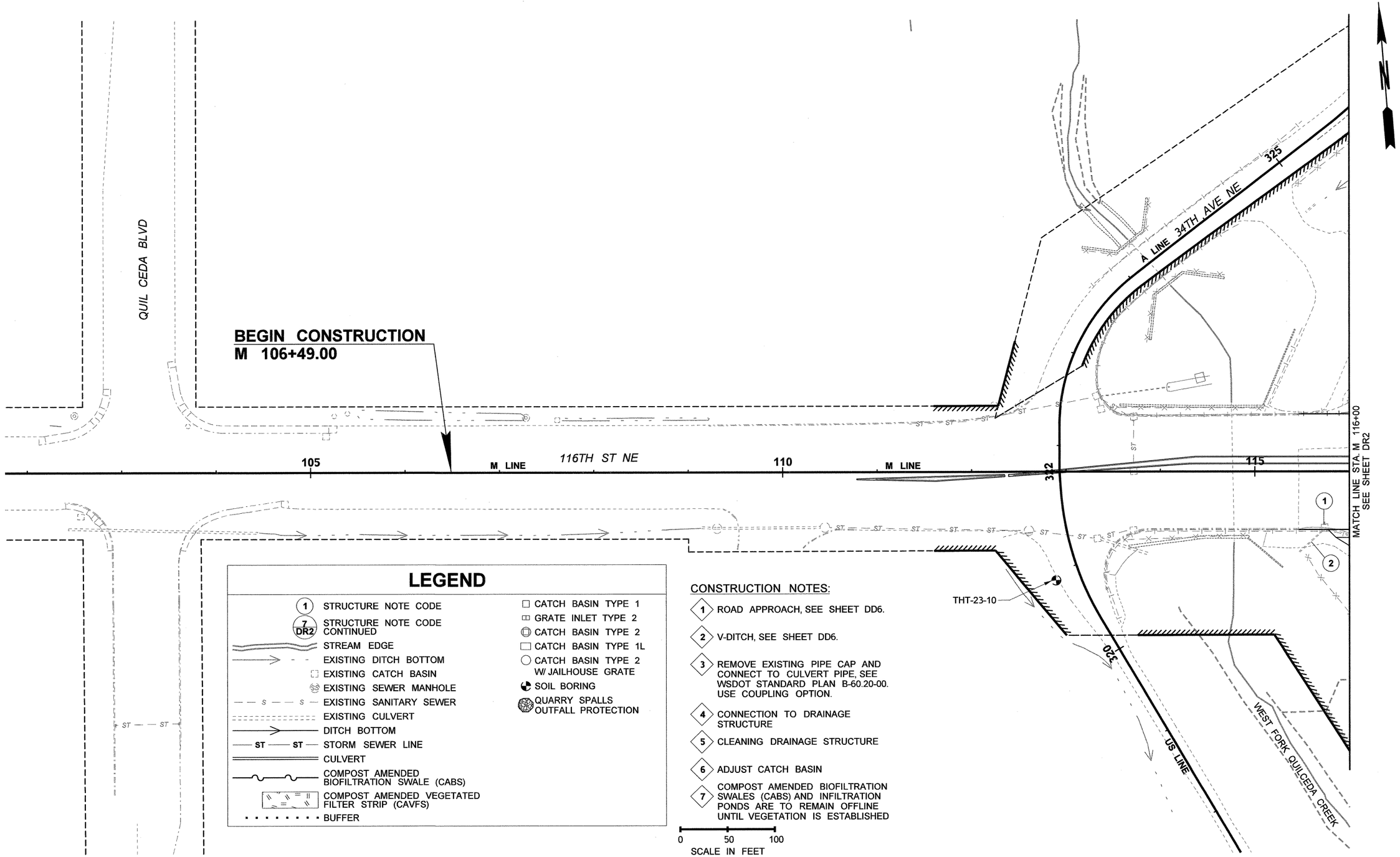

LEGEND

- (1) STRUCTURE NOTE CODE
- (7 / DR2) STRUCTURE NOTE CODE CONTINUED
- STREAM EDGE
- EXISTING DITCH BOTTOM
- EXISTING CATCH BASIN
- EXISTING SEWER MANHOLE
- EXISTING SANITARY SEWER
- EXISTING CULVERT
- DITCH BOTTOM
- ST — ST STORM SEWER LINE
- CULVERT
- COMPOST AMENDED BIOFILTRATION SWALE (CABS)
- COMPOST AMENDED VEGETATED FILTER STRIP (CAVFS)
- BUFFER
- CATCH BASIN TYPE 1
- GRATE INLET TYPE 2
- CATCH BASIN TYPE 2
- CATCH BASIN TYPE 1L
- CATCH BASIN TYPE 2 W/ JAILHOUSE GRATE
- SOIL BORING
- QUARRY SPALLS OUTFALL PROTECTION

CONSTRUCTION NOTES:

1. ROAD APPROACH, SEE SHEET DD6.
2. V-DITCH, SEE SHEET DD6.
3. REMOVE EXISTING PIPE CAP AND CONNECT TO CULVERT PIPE, SEE WSDOT STANDARD PLAN B-60.20-00. USE COUPLING OPTION.
4. CONNECTION TO DRAINAGE STRUCTURE
5. CLEANING DRAINAGE STRUCTURE
6. ADJUST CATCH BASIN
7. COMPOST AMENDED BIOFILTRATION SWALES (CABS) AND INFILTRATION PONDS ARE TO REMAIN OFFLINE UNTIL VEGETATION IS ESTABLISHED

0 50 100
SCALE IN FEET

FILE NAME	U:\PSO\Projects\Clients\1598-TulalipTribes\554-1598-095 116th-Ph4-PSE\99Svcs\CADD\DGN\PS&ESheets\BL1598033_PS_DR.dgn
TIME	12:33:56 PM
DATE	8/28/2017
PLOTTED BY	purgabut
DESIGNED BY	C. BUITRAGO
ENTERED BY	T. NABOURS
CHECKED BY	D. PROCTOR
APPROVED BY	H. LONGFELLOW

REVISION	DATE	BY

REGION NO.	STATE	FED.AID PROJ.NO.
10	WASH	
JOB NUMBER		
CONTRACT NO.		LOCATION NO.

P.E. STAMP BOX — DATE

NICHOLAS ALEXANDER BUITRAGO — STATE OF WASHINGTON — 45422 — REGISTERED PROFESSIONAL ENGINEER
08-28-2017
P.E. STAMP BOX — DATE

TULALIP TRIBES
Parametrix

I-5 / 116TH STREET NE INTERCHANGE IMPROVEMENTS PHASE 4 RAMPS

DRAINAGE PLAN

Plot 6
PLAN REF NO
DR4
SHEET 82 OF 238 SHEETS

CONSTRUCTION NOTES:

1. ROAD APPROACH, SEE SHEET DD6.
2. V-DITCH, SEE SHEET DD6.
3. REMOVE EXISTING PIPE CAP AND CONNECT TO CULVERT PIPE, SEE WSDOT STANDARD PLAN B-60.20-00. USE COUPLING OPTION.
4. CONNECTION TO DRAINAGE STRUCTURE
5. CLEANING DRAINAGE STRUCTURE
6. ADJUST CATCH BASIN
7. COMPOST AMENDED BIOFILTRATION SWALES (CABS) AND INFILTRATION PONDS ARE TO REMAIN OFFLINE UNTIL VEGETATION IS ESTABLISHED

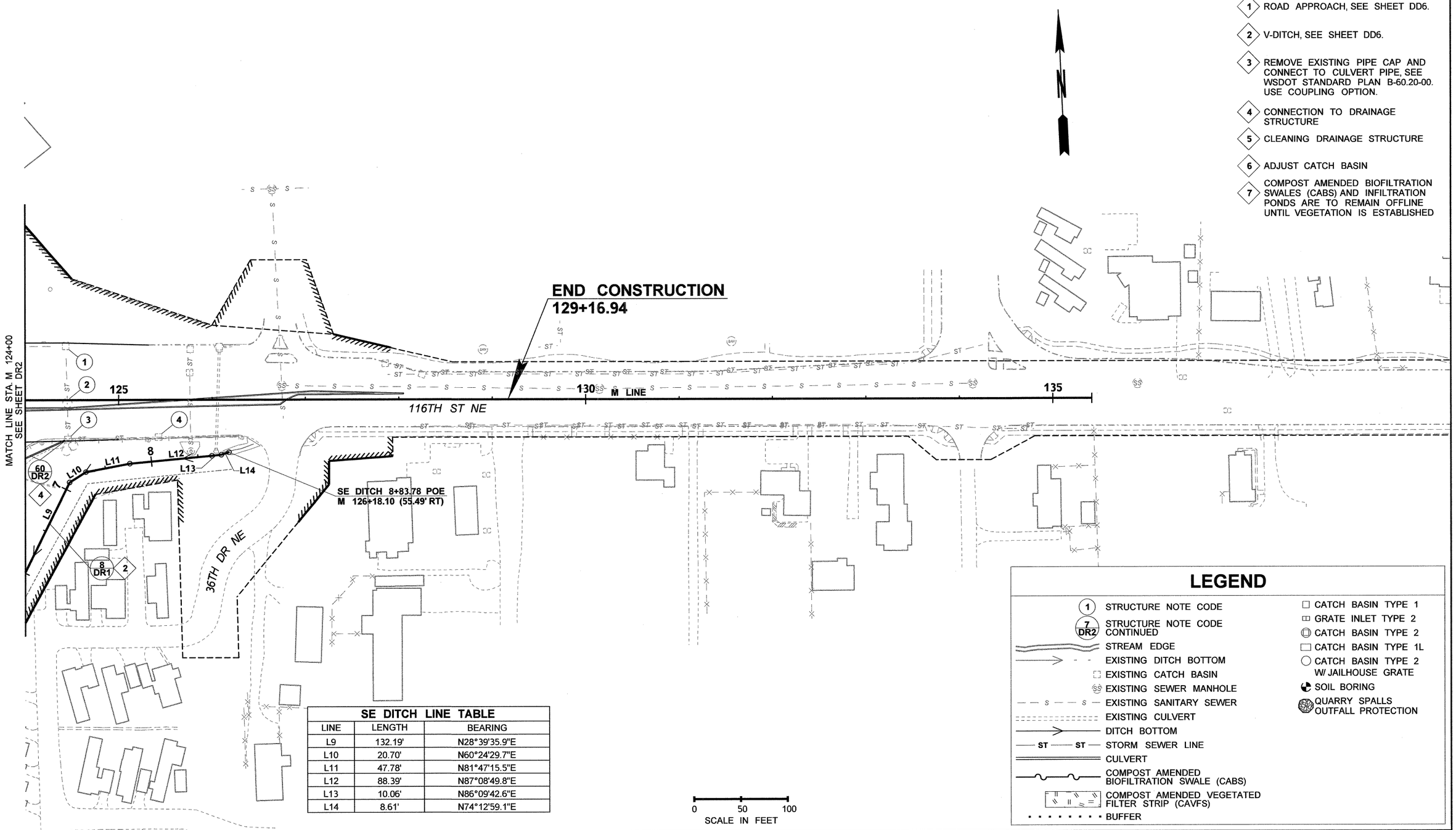

SE DITCH LINE TABLE

LINE	LENGTH	BEARING
L9	132.19'	N28°39'35.9"E
L10	20.70'	N60°24'29.7"E
L11	47.78'	N81°47'15.5"E
L12	88.39'	N87°08'49.8"E
L13	10.06'	N86°09'42.6"E
L14	8.61'	N74°12'59.1"E

LEGEND

- STRUCTURE NOTE CODE
- STRUCTURE NOTE CODE CONTINUED
- STREAM EDGE
- EXISTING DITCH BOTTOM
- EXISTING CATCH BASIN
- EXISTING SEWER MANHOLE
- EXISTING SANITARY SEWER
- EXISTING CULVERT
- DITCH BOTTOM
- STORM SEWER LINE
- CULVERT
- COMPOST AMENDED BIOFILTRATION SWALE (CABS)
- COMPOST AMENDED VEGETATED FILTER STRIP (CAVFS)
- BUFFER
- CATCH BASIN TYPE 1
- GRATE INLET TYPE 2
- CATCH BASIN TYPE 2
- CATCH BASIN TYPE 1L
- CATCH BASIN TYPE 2 W/ JAILHOUSE GRATE
- SOIL BORING
- QUARRY SPALLS OUTFALL PROTECTION

FILE NAME	U:\PSO\Projects\Clients\1598-TulalipTribes\554-1598-095 116th-Ph4-PSE\99Svcs\CADD\DGN\PS&ESheets\BL1598033_PS_DR.dgn
TIME	4:37:45 PM
DATE	8/28/2017
PLOTTED BY	purgabut
DESIGNED BY	C. BUITRAGO
ENTERED BY	T. NABOURS
CHECKED BY	D. PROCTOR
APPROVED BY	H. LONGFELLOW

REVISION | DATE | BY

REGION NO. 10 | STATE WASH | FED.AID PROJ.NO.

JOB NUMBER

CONTRACT NO. | LOCATION NO.

P.E. STAMP BOX — DATE

CRAIG ALEXANDER BUITRAGO — STATE OF WASHINGTON — 49427 — REGISTERED PROFESSIONAL ENGINEER — 08-29-2017 — DATE — P.E. STAMP BOX

TULALIP TRIBES — Parametrix

I-5 / 116TH STREET NE INTERCHANGE IMPROVEMENTS PHASE 4 RAMPS

DRAINAGE PLAN

Plot 7

PLAN REF NO DR5

SHEET 83 OF 238 SHEETS

NOTES:

1. SCH A SSP = SCHEDULE A STORM SEWER PIPE.
2. SCH B SSP = SCHEDULE B STORM SEWER PIPE.
3. CL V RCP = CLASS V REINFORCED CONCRETE STORM SEWER PIPE.
4. CPEP = CORRUGATED POLYETHYLENE STORM SEWER PIPE.
5. SEE SHEET DD5 FOR QUARRY SPALLS OUTLET PROTECTION DETAIL.
6. STRUCTURE OFFSETS ARE MEASURED TO CENTER OF GRATE.
7. BEVELED END SECTIONS AT ALL PIPE OUTFALL LOCATIONS.
8. SCH A CULV = SCHEDULE A CULVERT PIPE.
9. SCH B CULV = SCHEDULE B CULVERT PIPE.

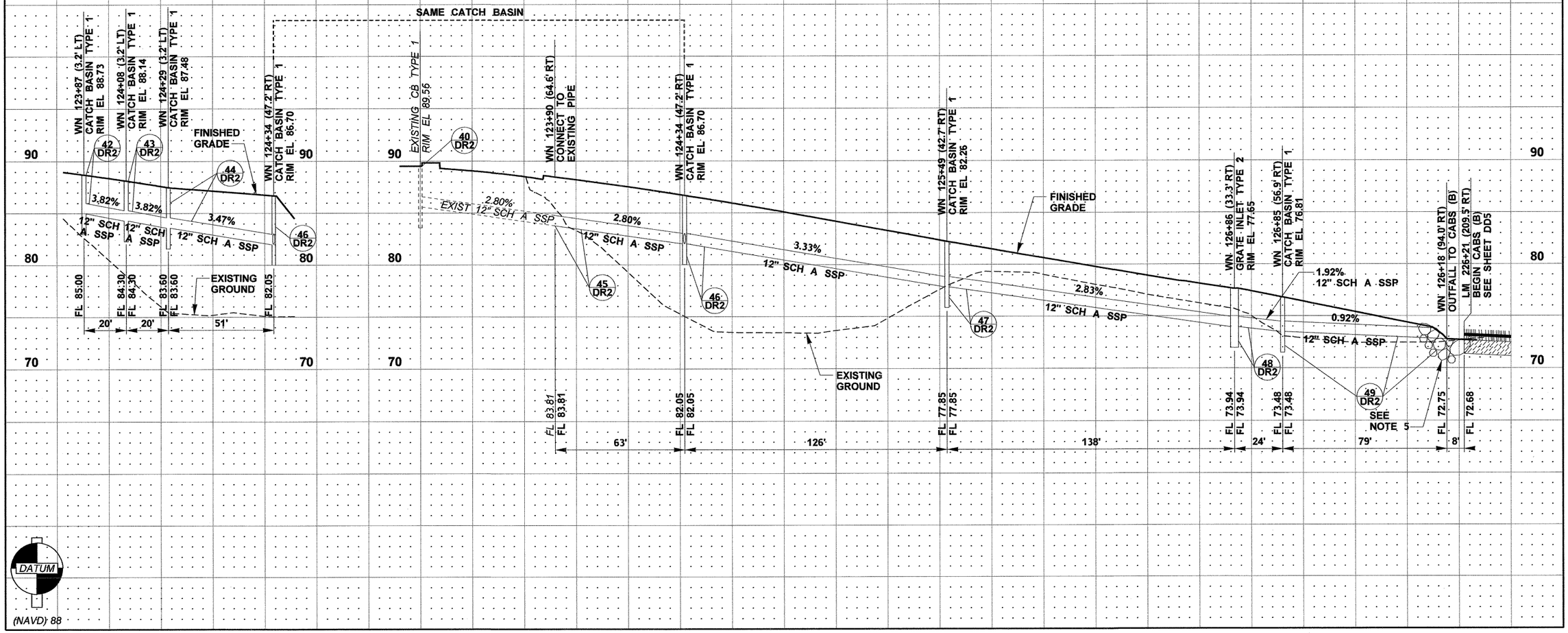

FILE NAME	U:\PSO\Projects\Clients\1598-TulalipTribes\554-1598-095 116th-Ph4-PSE\99Svcs\CADD\DGN\PS&ESheets\BL1598033_PR_DP.dgn					
TIME	1:22:46 PM					
DATE	8/28/2017					
PLOTTED BY	purgabut					
DESIGNED BY	C. BUITRAGO					
ENTERED BY	T. NABOURS					
CHECKED BY	D. PROCTOR					
APPROVED BY	H. LONGFELLOW					
		REVISION	DATE	BY		

REGION NO.	STATE	FED.AID PROJ.NO.
10	WASH	
JOB NUMBER		
CONTRACT NO.		LOCATION NO.

P.E. STAMP BOX — DATE

P.E. STAMP BOX — 08-29-2017 DATE

TULALIP TRIBES — Parametrix

I-5 / 116TH STREET NE
INTERCHANGE IMPROVEMENTS
PHASE 4 RAMPS

DRAINAGE PROFILES

Plot 1

PLAN REF. NO. DP1

SHEET 84 OF 238 SHEETS

NOTES:

1. SCH A SSP = SCHEDULE A STORM SEWER PIPE.
2. SCH B SSP = SCHEDULE B STORM SEWER PIPE.
3. CL V RCP = CLASS V REINFORCED CONCRETE STORM SEWER PIPE.
4. CPEP = CORRUGATED POLYETHYLENE STORM SEWER PIPE.
5. SEE SHEET DD5 FOR QUARRY SPALLS OUTLET PROTECTION DETAIL.
6. STRUCTURE OFFSETS ARE MEASURED TO CENTER OF GRATE.
7. BEVELED END SECTIONS AT ALL PIPE OUTFALL LOCATIONS.
8. SCH A CULV = SCHEDULE A CULVERT PIPE.
9. SCH B CULV = SCHEDULE B CULVERT PIPE.

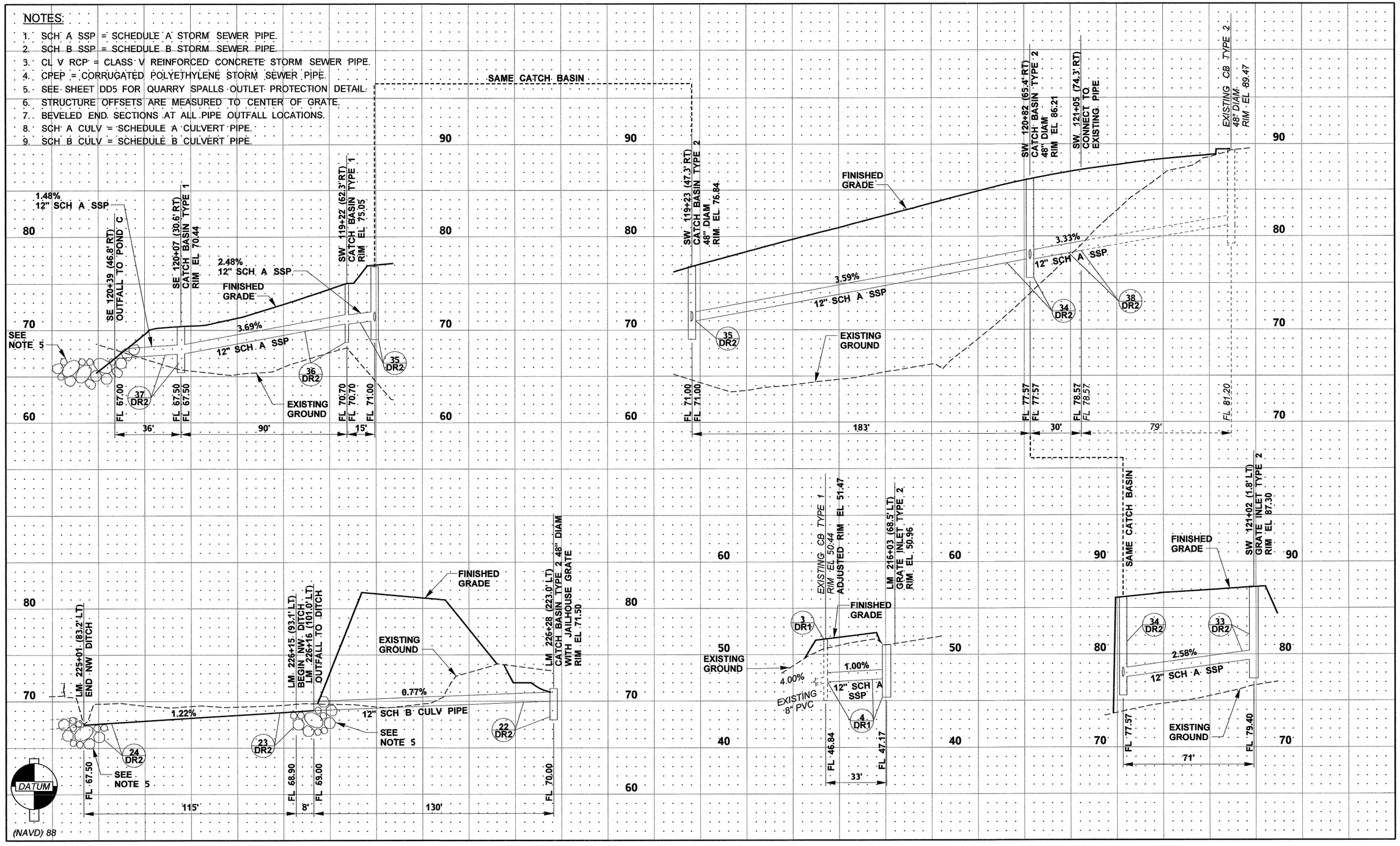

FILE NAME	U:\PSO\Projects\Clients\1598-TulalipTribes\554-1598-095 116th-Ph4-PSE\99Svcs\CADD\DGN\PS&ESheets\BL1598033_PR_DP.dgn					
TIME	1:22:59 PM					
DATE	8/28/2017					
PLOTTED BY	purgabut					
DESIGNED BY	C. BUITRAGO					
ENTERED BY	T. NABOURS					
CHECKED BY	D. PROCTOR					
APPROVED BY	H. LONGFELLOW					
		REVISION	DATE	BY		

REGION NO.	STATE	FED.AID PROJ.NO.
10	WASH	
JOB NUMBER		
CONTRACT NO.		LOCATION NO.

P.E. STAMP BOX — DATE

CRAIG ALEXANDER BUITRAGO — STATE OF WASHINGTON — 41421 — REGISTERED PROFESSIONAL ENGINEER
08-29-2017
P.E. STAMP BOX — DATE

TULALIP TRIBES — Parametrix

I-5 / 116TH STREET NE INTERCHANGE IMPROVEMENTS PHASE 4 RAMPS

DRAINAGE PROFILES

Plot 2

PLAN REF. NO. DP2

SHEET 85 OF 238 SHEETS

NOTES:

1. SCH A SSP = SCHEDULE A STORM SEWER PIPE.
2. SCH B SSP = SCHEDULE B STORM SEWER PIPE.
3. CL V RCP = CLASS V REINFORCED CONCRETE STORM SEWER PIPE.
4. CPEP = CORRUGATED POLYETHYLENE STORM SEWER PIPE.
5. SEE SHEET DD5 FOR QUARRY SPALLS OUTLET PROTECTION DETAIL.
6. STRUCTURE OFFSETS ARE MEASURED TO CENTER OF GRATE.
7. BEVELED END SECTIONS AT ALL PIPE OUTFALL LOCATIONS.
8. SCH A CULV = SCHEDULE A CULVERT PIPE.
9. SCH B CULV = SCHEDULE B CULVERT PIPE.

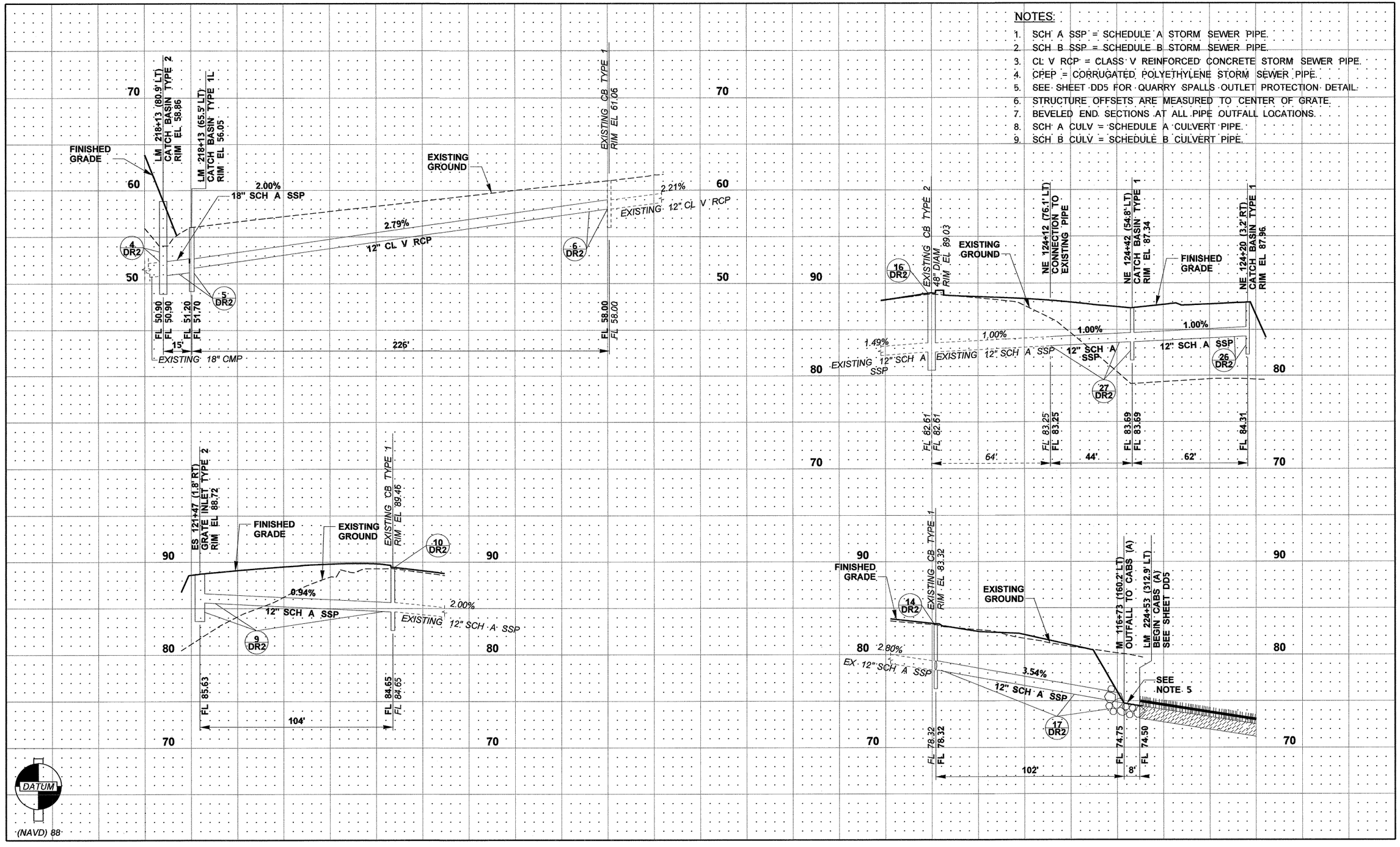

FILE NAME	U:\PSO\Projects\Clients\1598-TulalipTribes\554-1598-095 116th-Ph4-PSE\99Svcs\CADD\DGN\PS&ESheets\BL1598033_PR_DP.dgn
TIME	1:24:41 PM
DATE	8/28/2017
PLOTTED BY	purgabut
DESIGNED BY	C. BUITRAGO
ENTERED BY	T. NABOURS
CHECKED BY	D. PROCTOR
APPROVED BY	H. LONGFELLOW

REVISION	DATE	BY

REGION NO.	STATE	FED.AID PROJ.NO.
10	WASH	
JOB NUMBER		
CONTRACT NO.		LOCATION NO.

P.E. STAMP BOX — DATE

P.E. STAMP BOX — DATE: 08-29-2017

TULALIP TRIBES — Parametrix

I-5 / 116TH STREET NE INTERCHANGE IMPROVEMENTS PHASE 4 RAMPS

DRAINAGE PROFILES

Plot 3

PLAN REF. NO. DP3

SHEET 86 OF 238 SHEETS

NOTES:

1. SCH A SSP = SCHEDULE A STORM SEWER PIPE.
2. SCH B SSP = SCHEDULE B STORM SEWER PIPE.
3. CL V RCP = CLASS V REINFORCED CONCRETE STORM SEWER PIPE.
4. CPEP = CORRUGATED POLYETHYLENE STORM SEWER PIPE.
5. SEE SHEET DD5 FOR QUARRY SPALLS OUTLET PROTECTION DETAIL.
6. STRUCTURE OFFSETS ARE MEASURED TO CENTER OF GRATE.
7. BEVELED END SECTIONS AT ALL PIPE OUTFALL LOCATIONS.
8. SCH A CULV = SCHEDULE A CULVERT PIPE.
9. SCH B CULV = SCHEDULE B CULVERT PIPE.

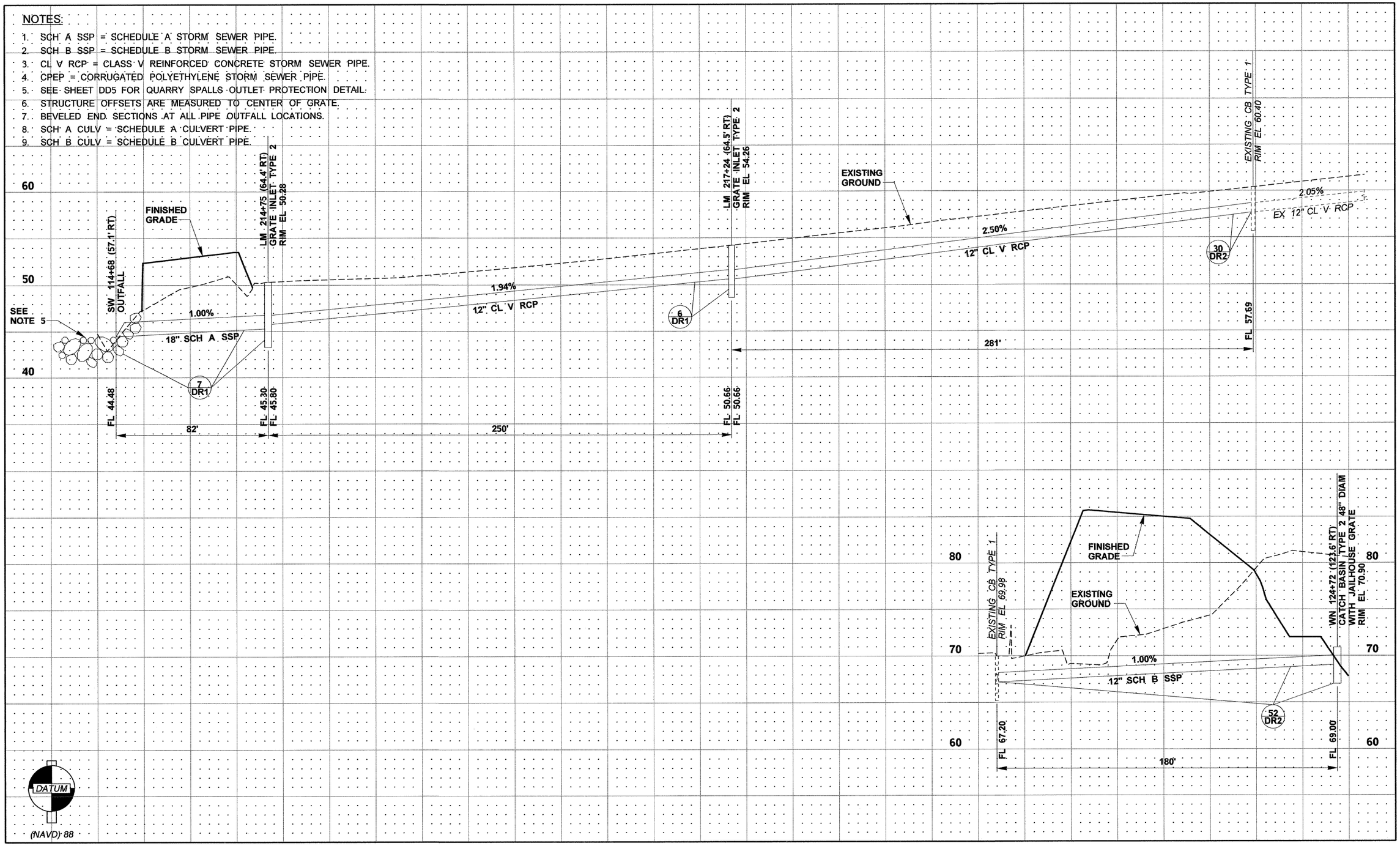

FILE NAME	U:\PSO\Projects\Clients\1598-TulalipTribes\554-1598-095 116th-Ph4-PSE\99Svcs\CADD\DGN\PS&ESheets\BL1598033_PR_DP.dgn						
TIME	1:23:22 PM				REGION NO.	STATE	FED.AID PROJ.NO.
DATE	8/28/2017				10	WASH	
PLOTTED BY	purgabut				JOB NUMBER		
DESIGNED BY	C. BUITRAGO						
ENTERED BY	T. NABOURS				CONTRACT NO.		LOCATION NO.
CHECKED BY	D. PROCTOR						
APPROVED BY	H. LONGFELLOW						
		REVISION	DATE	BY			

P.E. STAMP BOX — DATE

CRAIG ALEXANDER BUITRAGO — STATE OF WASHINGTON — 49422 — REGISTERED PROFESSIONAL ENGINEER — 08-29-2017 — DATE — P.E. STAMP BOX

TULALIP TRIBES — Parametrix

I-5 / 116TH STREET NE INTERCHANGE IMPROVEMENTS PHASE 4 RAMPS

DRAINAGE PROFILES

Plot 4

PLAN REF. NO. DP4

SHEET 87 OF 238 SHEETS

NOTES:

1. SCH A SSP = SCHEDULE A STORM SEWER PIPE.
2. SCH B SSP = SCHEDULE B STORM SEWER PIPE.
3. CL V RCP = CLASS V REINFORCED CONCRETE STORM SEWER PIPE.
4. CPEP = CORRUGATED POLYETHYLENE STORM SEWER PIPE.
5. SEE SHEET DD5 FOR QUARRY SPALLS OUTLET PROTECTION DETAIL.
6. STRUCTURE OFFSETS ARE MEASURED TO CENTER OF GRATE.
7. BEVELED END SECTIONS AT ALL PIPE OUTFALL LOCATIONS.
8. SCH A CULV = SCHEDULE A CULVERT PIPE.
9. SCH B CULV = SCHEDULE B CULVERT PIPE.

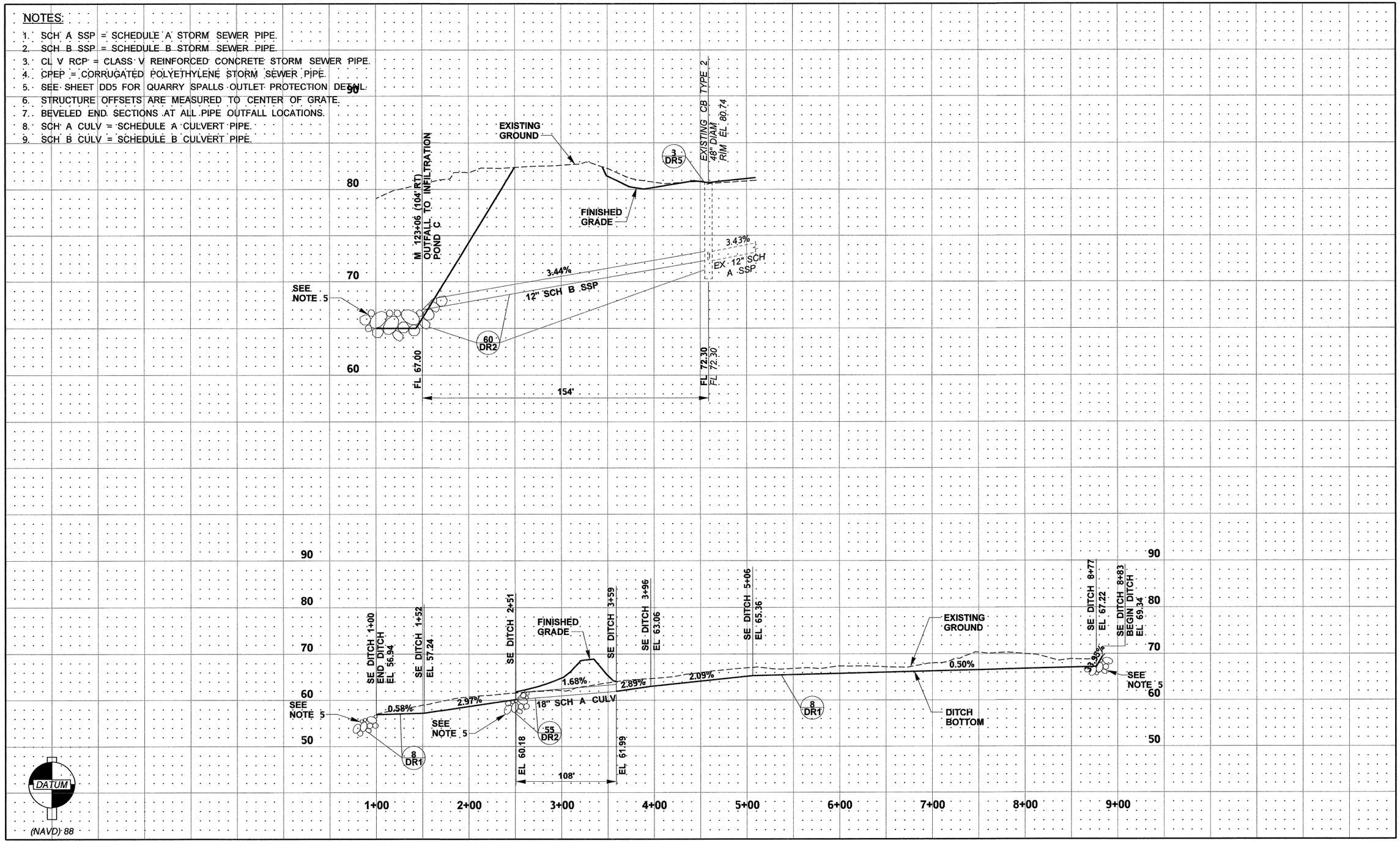

FILE NAME	U:\PSO\Projects\Clients\1598-TulalipTribes\554-1598-095 116th-Ph4-PSE\99Svcs\CADD\DGN\PS&ESheets\BL1598033_PR_DP.dgn
TIME	1:23:33 PM
DATE	8/28/2017
PLOTTED BY	purgabut
DESIGNED BY	C. BUITRAGO
ENTERED BY	T. NABOURS
CHECKED BY	D. PROCTOR
APPROVED BY	H. LONGFELLOW

REVISION | DATE | BY

REGION NO.	STATE	FED.AID PROJ.NO.
10	WASH	
JOB NUMBER		
CONTRACT NO.		LOCATION NO.

P.E. STAMP BOX — DATE

CRAIG ALEXANDER BUITRAGO — STATE OF WASHINGTON — 49427 — REGISTERED PROFESSIONAL ENGINEER
08-29-2017
P.E. STAMP BOX — DATE

TULALIP TRIBES — Parametrix

I-5 / 116TH STREET NE INTERCHANGE IMPROVEMENTS PHASE 4 RAMPS

DRAINAGE PROFILES

Plot 5

PLAN REF. NO. DP5

SHEET 88 OF 238 SHEETS

CONSTRUCTION POINTS COORDINATION TABLE

POINT	STATION	OFFSET	ELEVATION
A	226+62.69	249.25' LT	67
B	227+28.67	200.70' LT	67
C	227+27.01	197.15' LT	67
D	226+43.24	217.08' LT	67
E	226+41.72	218.78' LT	67
F	226+38.95	241.39' LT	67
G	226+53.94	237.08' LT	67
H	226+27.47	255.77' LT	72
I	226+23.86	241.20' LT	72
J	226+25.14	230.75' LT	72
K	226+13.23	229.29' LT	72
L	226+11.53	243.12' LT	72
M	226+15.42	259.85' LT	72
GROUND WATER			57

NOTES:
1. FOR LEGEND AND GENERAL NOTES, SEE DRAWING DR1.
2. ELEVATION IS BASED ON ACCESS ROAD SLOPE PER PLAN.
3. STATION AND OFFSET FROM LM LINE.

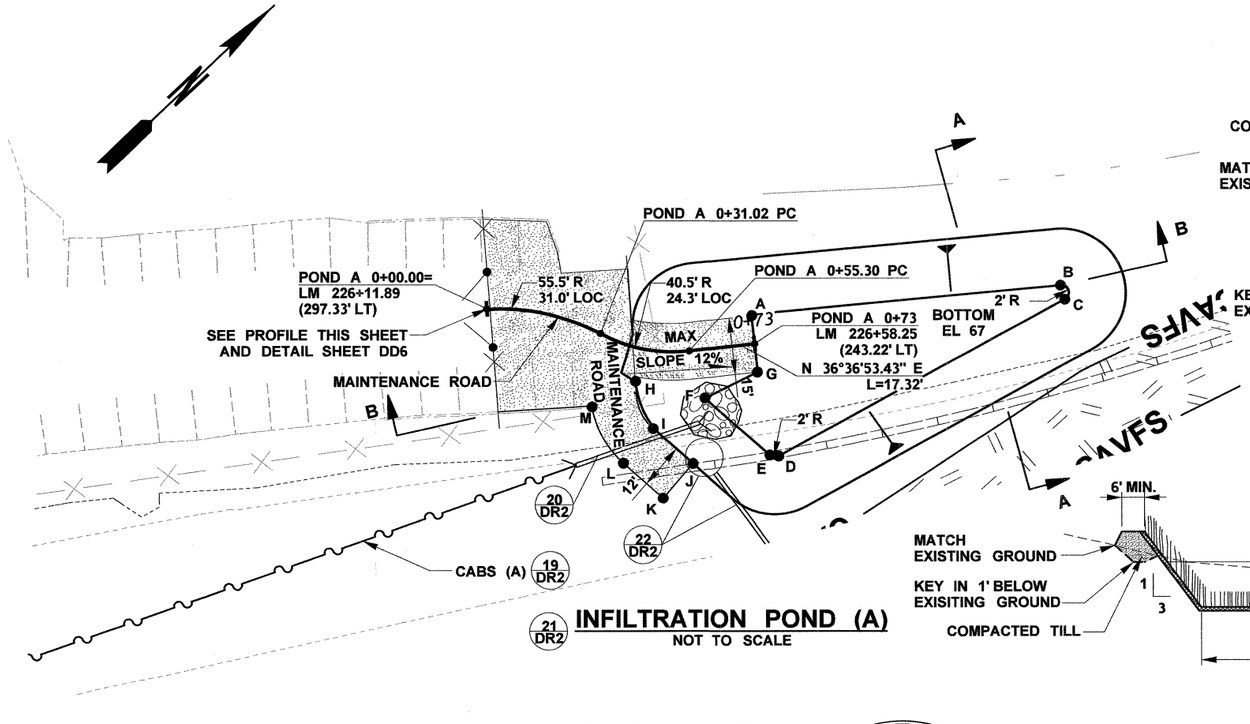

INFILTRATION POND (A)
NOT TO SCALE

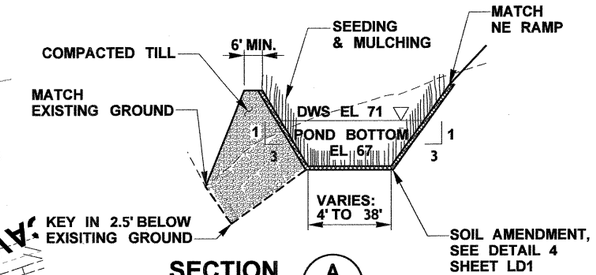

SECTION A
NOT TO SCALE

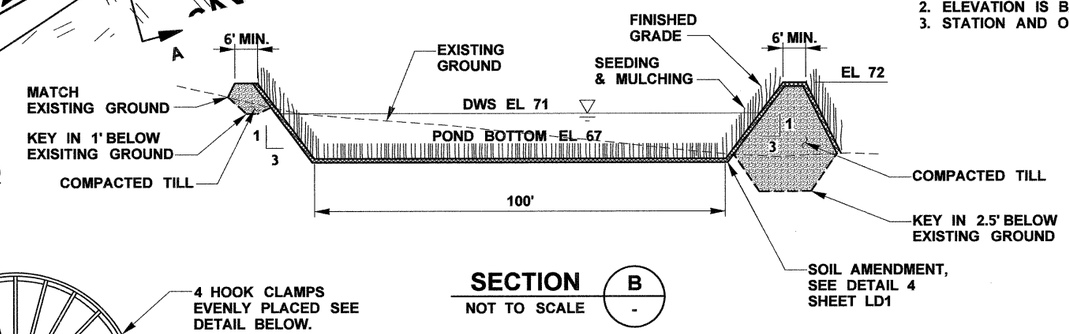

SECTION B
NOT TO SCALE

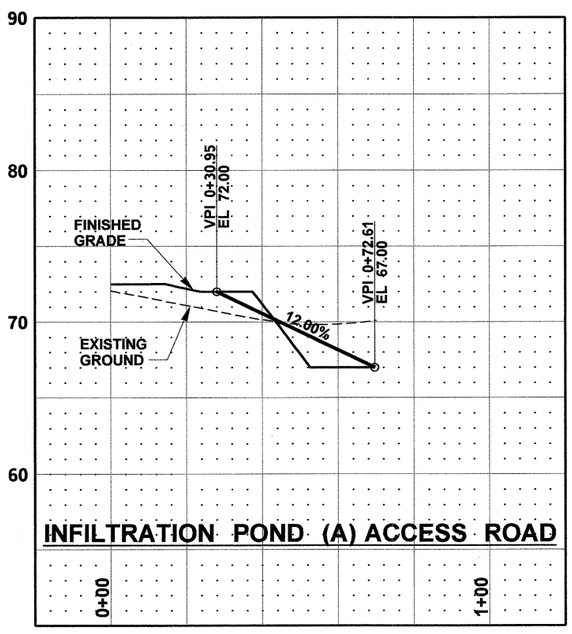

INFILTRATION POND (A) ACCESS ROAD

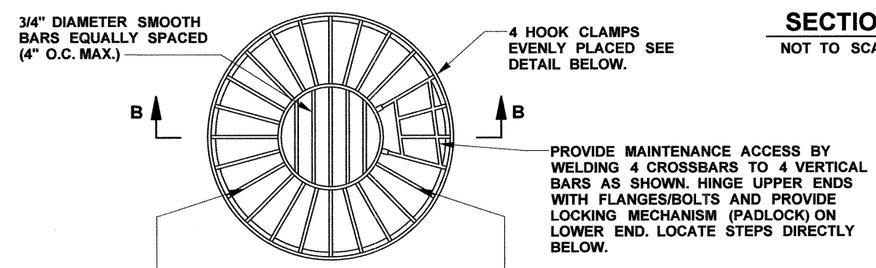

PLAN VIEW

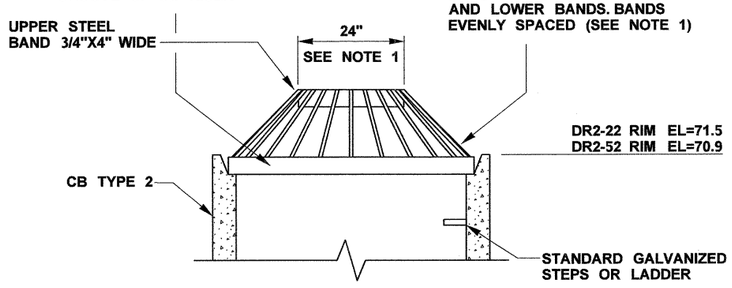

SECTION B-B

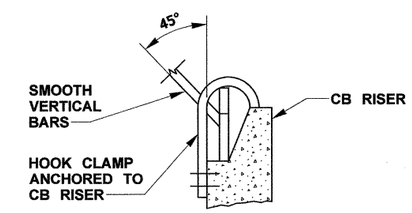

DETAIL HOOK CLAMP

22 DR2 52 DR2 CATCH BASIN TYPE 2 48 IN. DIAM. WITH DEBRIS CAGE DETAIL
NOT TO SCALE

NOTES:
1. DIMENSIONS ARE FOR ILLUSTRATION ON 54 IN. DIAMETER CB. FOR DIFFERENT DIAMETER CB'S, ADJUST TO MAINTAIN 45° ANGLE ON "VERTICAL" BARS AND 4 IN. O.C. MAXIMUM SPACING OF BARS AROUND LOWER STEEL BAND.
2. METAL PARTS MUST BE CORROSION RESISTANT, STEEL BARS MUST BE GALVANIZED.
3. THIS DEBRIS BARRIER IS ALSO RECOMMENDED FOR USE ON THE INLET TO ROADWAY CROSS-CULVERTS WITH HEIGHT POTENTIAL FOR DEBRIS COLLECTION (EXCEPT ON TYPE 2 STREAMS)
4. USE OF THIS STRUCTURE WITHIN THE ROAD RIGHT-OF-WAY SHALL MEET THE MINIMUM CLEAR ZONE REQUIREMENTS.

FILE NAME	U:\PSO\Projects\Clients\1598-TulalipTribes\554-1598-095 116th-Ph4-PSE\99Svcs\CADD\DGN\PS&ESheets\BL1598033_DE_DD.dgn
TIME	2:24:03 PM
DATE	8/30/2017
PLOTTED BY	purgabut
DESIGNED BY	C. BUITRAGO
ENTERED BY	T. NABOURS
CHECKED BY	D. PROCTOR
APPROVED BY	H. LONGFELLOW

REVISION | DATE | BY

REGION NO. 10 | STATE WASH | FED.AID PROJ.NO.
JOB NUMBER
CONTRACT NO. | LOCATION NO.

P.E. STAMP BOX — DATE

CONALD ALEXANDER BUITRAGO — STATE OF WASHINGTON — 43422 — REGISTERED PROFESSIONAL ENGINEER
08-30-2017 DATE
P.E. STAMP BOX

TULALIP TRIBES — Parametrix

I-5 / 116TH STREET NE
INTERCHANGE IMPROVEMENTS
PHASE 4 RAMPS

DRAINAGE DETAILS

Plot 1
PLAN REF. NO. DD1
SHEET 89 OF 238 SHEETS

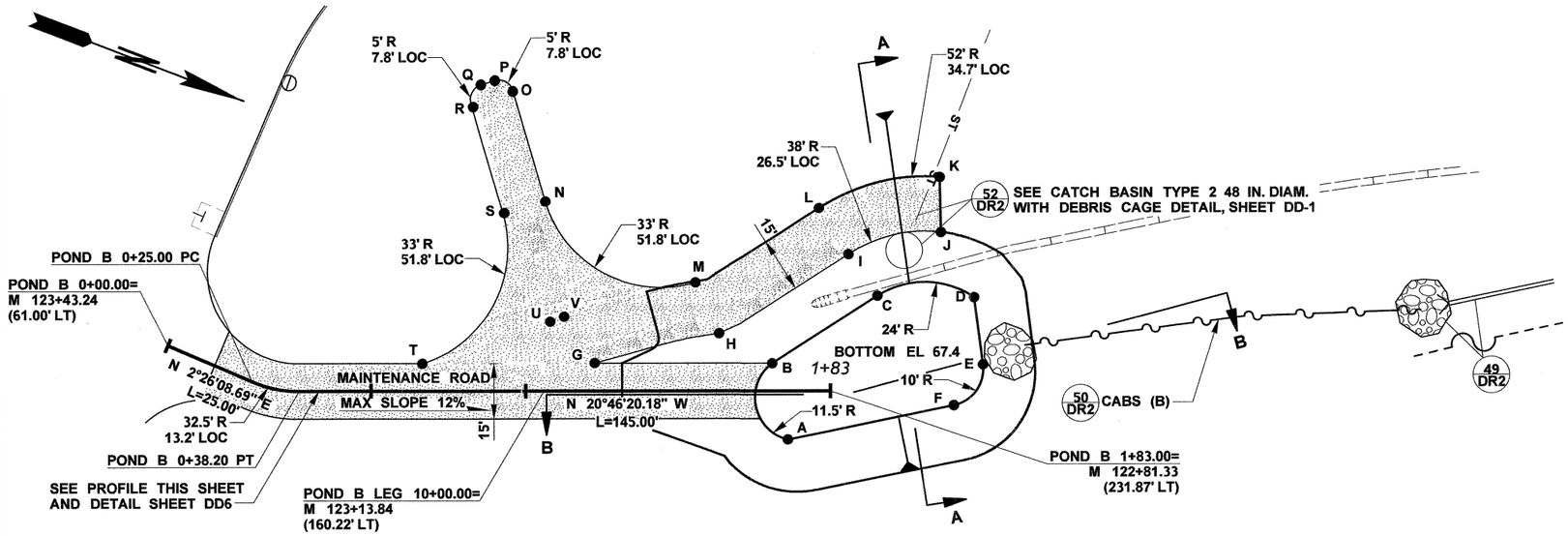

51 DR2 INFILTRATION POND (B)

NOT TO SCALE

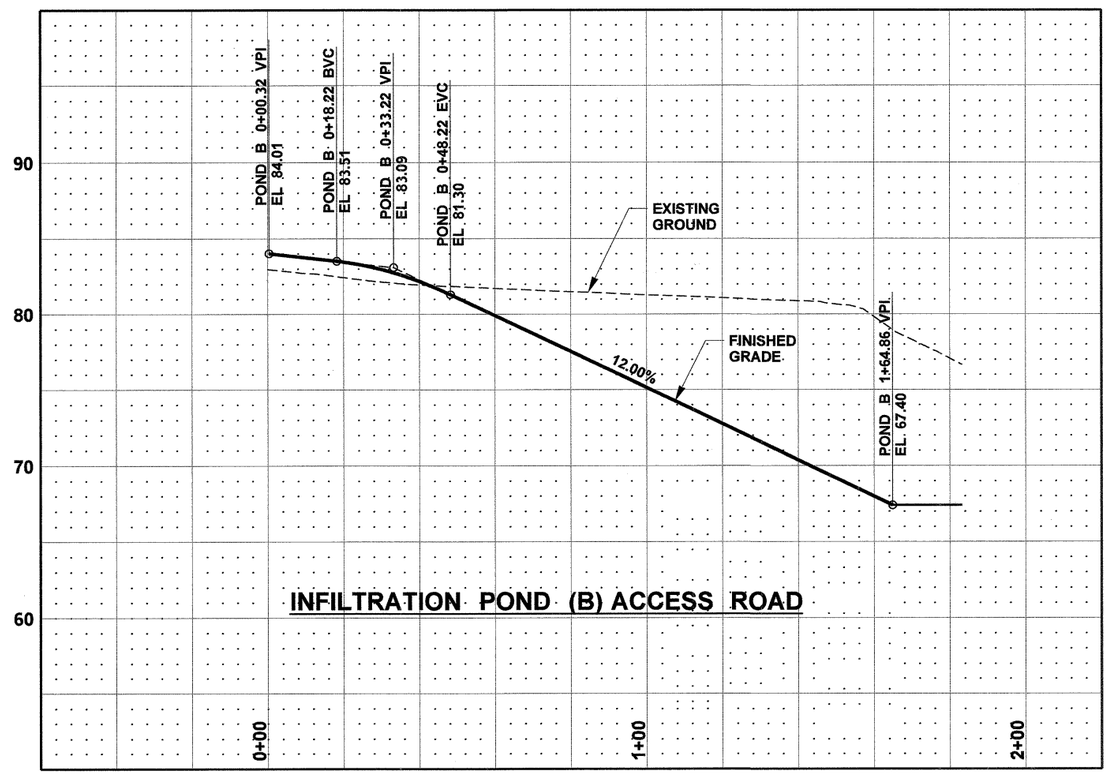

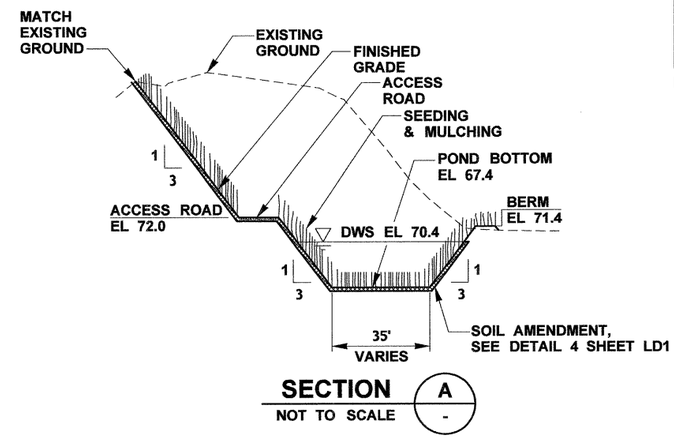

SECTION A

NOT TO SCALE

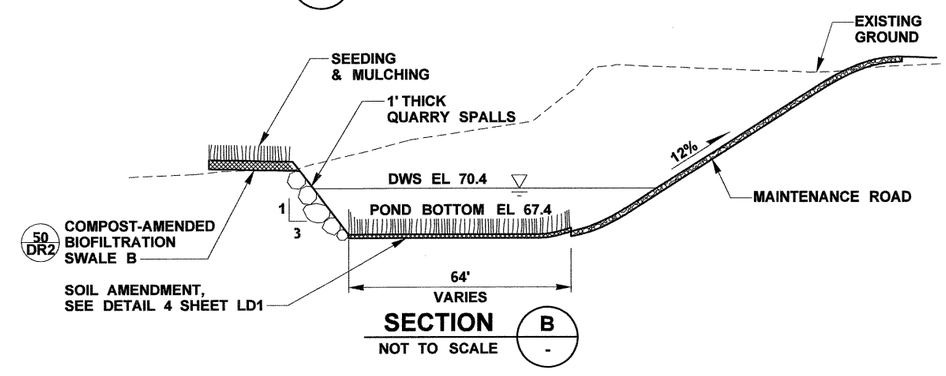

SECTION B

NOT TO SCALE

CONSTRUCTION POINTS COORDINATION TABLE

POINT	STATION	OFFSET	ELEVATION
A	224+73.4	305.7' RT	67.4
B	224+62.3	287.6' RT	67.4
C	224+81.9	260.5' RT	67.4
D	225+06.5	251.2' RT	67.4
E	225+15.5	267.3' RT	67.4
F	225+12.2	280.5' RT	67.4
G	224+16.8	306.2' RT	72.9
H	224+45.5	286.0' RT	72.0
I	224+70.4	252.9' RT	72.0
J	224+91.6	238.0' RT	72.0
K	224+85.7	224.0' RT	72.0
L	224+58.2	244.1' RT	72.0
M	224+34.3	275.5' RT	72.0
N	223+88.1	269.9' RT	75.6
O	223+69.0	245.4' RT	77.8
P	223+63.4	244.8' RT	78.2
Q	223+60.3	247.2' RT	78.4
R	223+59.6	252.8' RT	78.3
S	223+78.6	277.1' RT	76.6
T	223+73.0	323.6' RT	78.5
U	224+01.4	300.0' RT	74.3
V	224+04.5	297.3' RT	73.7
GROUND WATER			60.2

NOTES:
1. FOR LEGEND AND GENERAL NOTES, SEE DRAWING DR1.
2. ELEVATION IS BASED ON ACCESS ROAD SLOPE PER PLAN.
3. STATION AND OFFSET FROM LM LINE.

FILE NAME	U:\PSO\Projects\Clients\1598-TulalipTribes\554-1598-095 116th-Ph4-PSE\99Svcs\CADD\DGN\PS&ESheets\BL1598033_DE_DD.dgn
TIME	10:40:48 AM
DATE	8/30/2017
PLOTTED BY	purgabut
DESIGNED BY	C. BUITRAGO
ENTERED BY	T. NABOURS
CHECKED BY	D. PROCTOR
APPROVED BY	H. LONGFELLOW

REVISION | DATE | BY

REGION NO. 10 | STATE WASH | FED.AID PROJ.NO.

JOB NUMBER

CONTRACT NO. | LOCATION NO.

DATE
P.E. STAMP BOX

CHRISTIAN ALEXANDER BUITRAGO — STATE OF WASHINGTON — 49427 — REGISTERED PROFESSIONAL ENGINEER
08-30-2017
DATE
P.E. STAMP BOX

TULALIP TRIBES
Parametrix

I-5 / 116TH STREET NE
INTERCHANGE IMPROVEMENTS
PHASE 4 RAMPS

DRAINAGE DETAILS

Plot 2
PLAN REF. NO. DD2
SHEET 90 OF 238 SHEETS

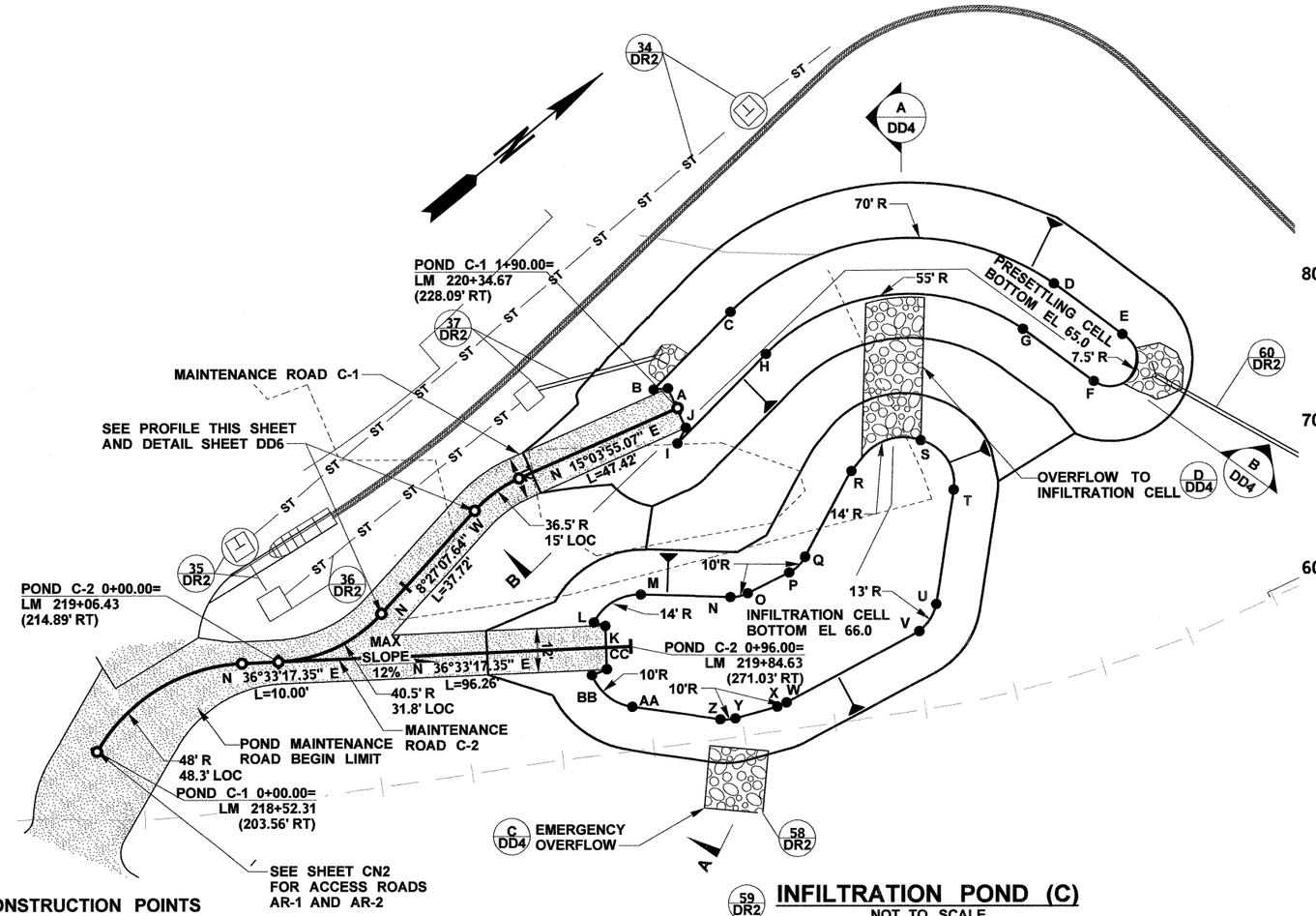

59 DR2 **INFILTRATION POND (C)**

NOT TO SCALE

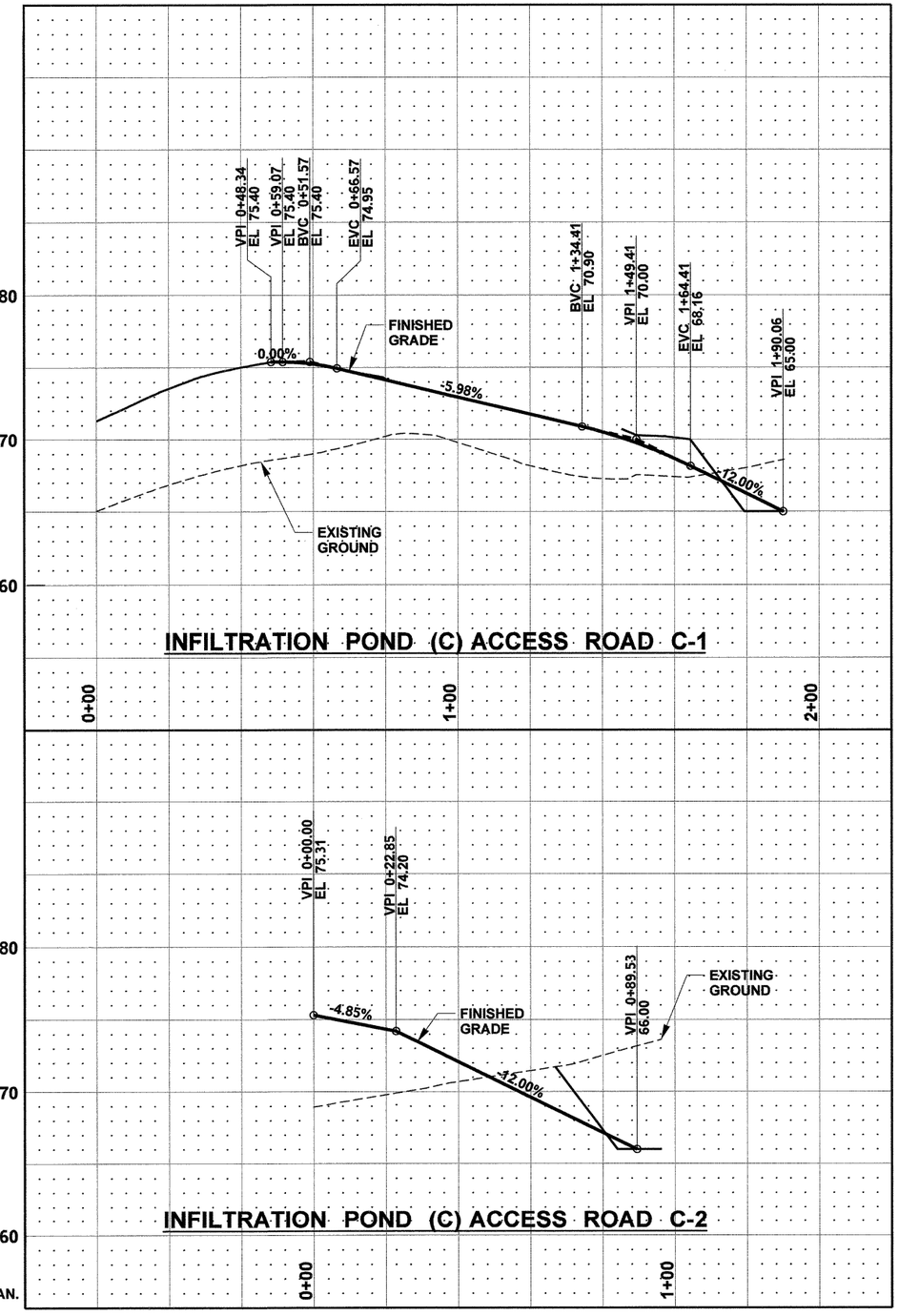

CONSTRUCTION POINTS COORDINATION TABLE

POINT	STATION	OFFSET	ELEVATION
A	220+35.95	222.22' RT	65
B	220+32.64	220.08' RT	65
C	220+62.37	216.27' RT	65
D	221+36.55	264.76' RT	65
E	221+42.70	287.18' RT	65
F	221+28.58	292.44' RT	65
G	221+22.25	269.28' RT	65
H	220+62.84	231.32' RT	65
I	220+28.65	235.69' RT	65
J	220+33.08	233.73' RT	65
K	219+82.58	262.34' RT	66
L	219+80.73	259.68' RT	66
M	219+95.49	261.66' RT	66
N	220+14.30	277.30' RT	66

POINT	STATION	OFFSET	ELEVATION
O	220+18.68	279.41' RT	66
P	220+31.10	281.97' RT	66
Q	220+37.08	281.35' RT	66
R	220+65.72	269.97' RT	66
S	220+81.48	276.02' RT	66
T	220+80.17	292.21' RT	66
U	220+57.33	313.55' RT	66
V	220+49.17	316.44' RT	66
W	220+08.65	309.30' RT	66
X	220+05.96	308.61' RT	66
Y	219+94.97	304.05' RT	66
Z	219+91.58	301.74' RT	66
GROUND WATER			57.6

POINT	STATION	OFFSET	ELEVATION
AA	219+74.79	284.23' RT	66
BB	219+71.46	270.61' RT	66
CC	219+75.60	271.93' RT	66

NOTES:

1. FOR LEGEND AND GENERAL NOTES, SEE DRAWING DR1.
2. ELEVATION IS BASED ON ACCESS ROAD SLOPE PER PLAN.
3. STATION AND OFFSET FROM LM LINE.

FILE NAME	U:\PSO\Projects\Clients\1598-TulalipTribes\554-1598-095 116th-Ph4-PSE\99Svcs\CADD\DGN\PS&ESheets\BL1598033_DE_DD.dgn
TIME	10:41:39 AM
DATE	8/30/2017
PLOTTED BY	purgabut
DESIGNED BY	C. BUITRAGO
ENTERED BY	T. NABOURS
CHECKED BY	D. PROCTOR
APPROVED BY	H. LONGFELLOW

REVISION | DATE | BY

REGION NO. 10 | STATE WASH | FED.AID PROJ.NO.

JOB NUMBER

CONTRACT NO. | LOCATION NO.

P.E. STAMP BOX — DATE

P.E. STAMP BOX — DATE 08-30-2017

TULALIP TRIBES — Parametrix

I-5 / 116TH STREET NE
INTERCHANGE IMPROVEMENTS
PHASE 4 RAMPS

DRAINAGE DETAILS

Plot 3

PLAN REF. NO. DD3

SHEET 91 OF 238 SHEETS

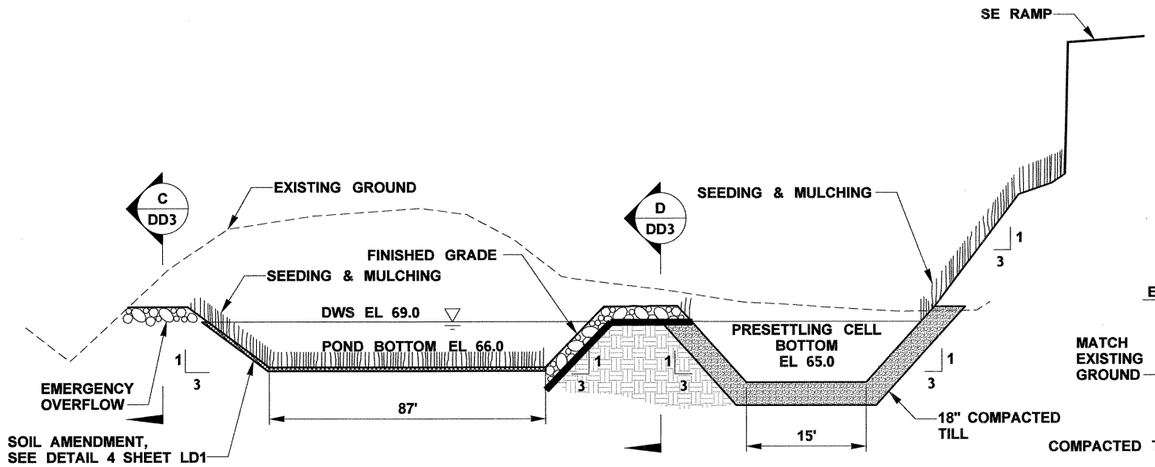

SECTION A (DD3)
NOT TO SCALE

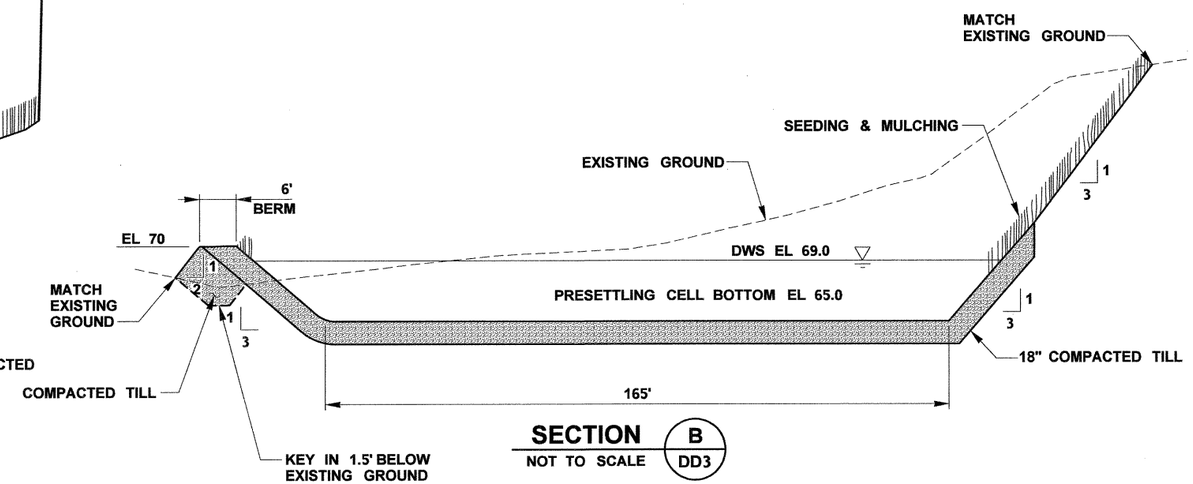

SECTION B (DD3)
NOT TO SCALE

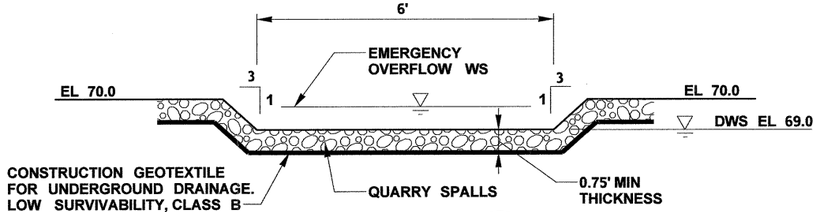

SECTION C (58 DR2)
NOT TO SCALE

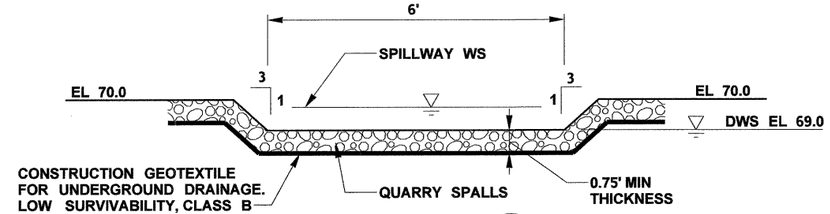

SECTION D
NOT TO SCALE

59 DR2 INFILTRATION POND (C) SECTIONS
NOT TO SCALE

FILE NAME	U:\PSO\Projects\Clients\1598-TulalipTribes\554-1598-095 116th-Ph4-PSE\99Svcs\CADD\DGN\PS&ESheets\BL1598033_DE_DD.dgn					
TIME	10:43:26 AM				REGION NO. 10	STATE WASH	FED.AID PROJ.NO.
DATE	8/30/2017					
PLOTTED BY	purgabut				JOB NUMBER	
DESIGNED BY	C. BUITRAGO					
ENTERED BY	T. NABOURS					
CHECKED BY	D. PROCTOR				CONTRACT NO.	LOCATION NO.
APPROVED BY	H. LONGFELLOW					
		REVISION	DATE	BY		

P.E. STAMP BOX — DATE

P.E. STAMP BOX — 08-30-2017 DATE

TULALIP TRIBES
Parametrix

I-5 / 116TH STREET NE
INTERCHANGE IMPROVEMENTS
PHASE 4 RAMPS

DRAINAGE DETAILS

Plot 4
PLAN REF NO DD4
SHEET 92 OF 238 SHEETS

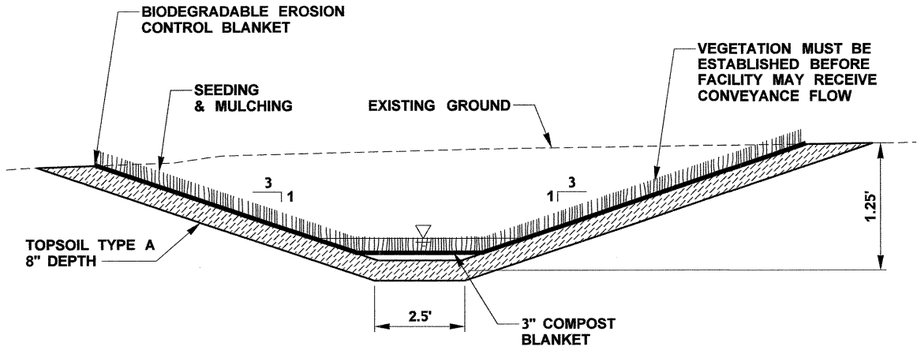

19/DR2 COMPOST-AMENDED BIOFILTRATION SWALE (CABS) (A) SECTION

NOT TO SCALE

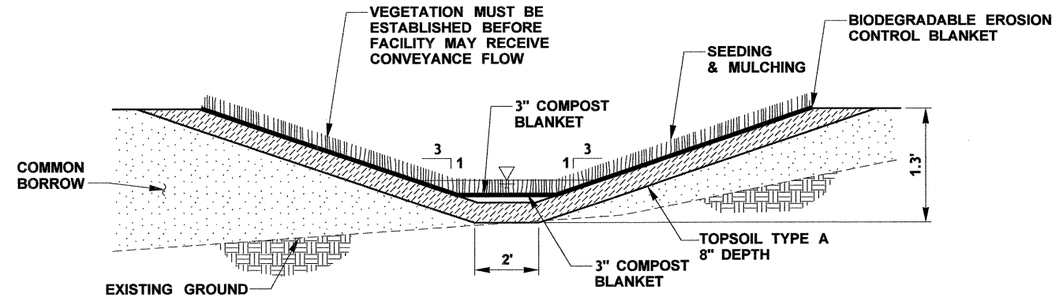

50/DR2 COMPOST-AMENDED BIOFILTRATION SWALE (CABS) B SECTION

NOT TO SCALE

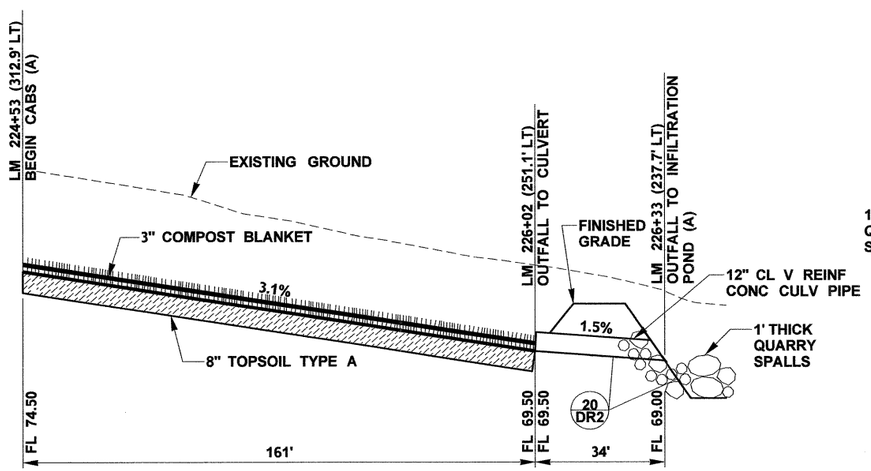

19/DR2 COMPOST-AMENDED BIOFILTRATION SWALE (CABS) (A) PROFILE

NOT TO SCALE

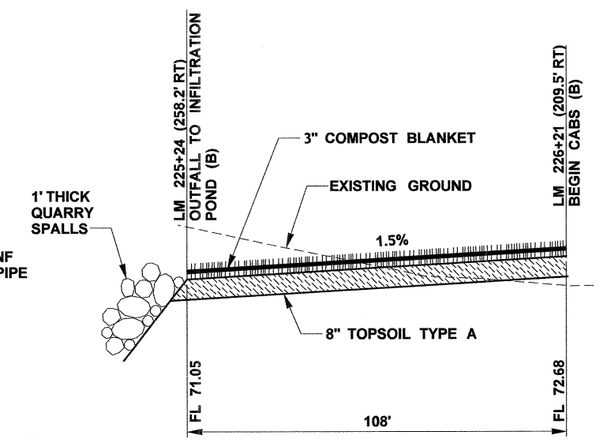

50/DR2 COMPOST-AMENDED BIOFILTRATION SWALE (CABS) (B) PROFILE

NOT TO SCALE

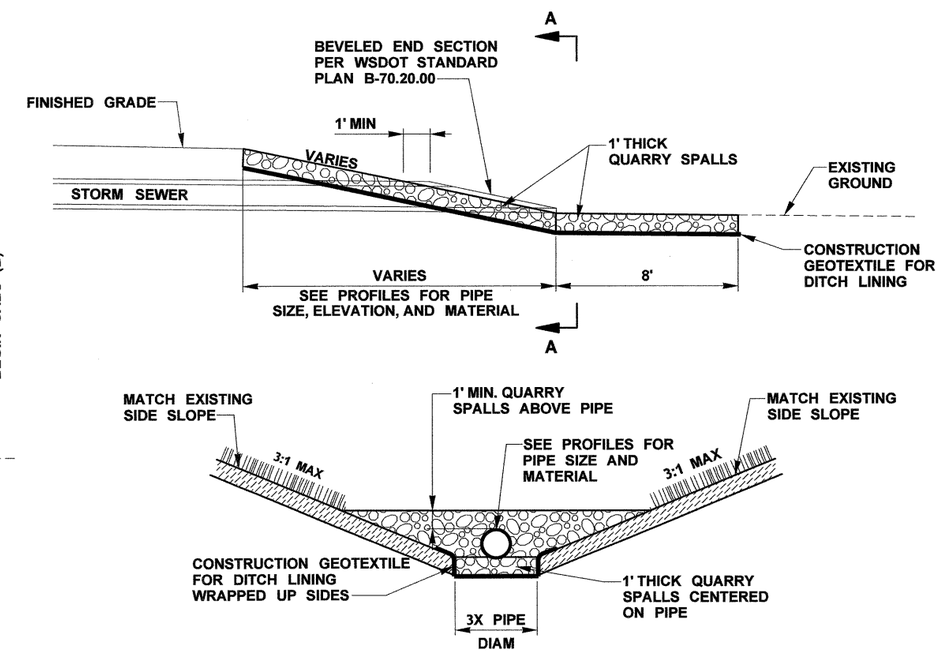

SECTION A-A

QUARRY SPALL OUTFALL PROTECTION

NOT TO SCALE

FILE NAME	U:\PSO\Projects\Clients\1598-TulalipTribes\554-1598-095 116th-Ph4-PSE\99Svcs\CADD\DGN\PS&ESheets\BL1598033_DE_DD.dgn
TIME	10:48:24 AM
DATE	8/30/2017
PLOTTED BY	purgabut
DESIGNED BY	C. BUITRAGO
ENTERED BY	T. NABOURS
CHECKED BY	D. PROCTOR
APPROVED BY	H. LONGFELLOW

REVISION	DATE	BY

REGION NO.	STATE	FED.AID PROJ.NO.
10	WASH	
JOB NUMBER		
CONTRACT NO.		LOCATION NO.

P.E. STAMP BOX — DATE

P.E. STAMP BOX — DATE: 08-30-2017

TULALIP TRIBES — Parametrix

I-5 / 116TH STREET NE INTERCHANGE IMPROVEMENTS PHASE 4 RAMPS

DRAINAGE DETAILS

Plot 5

PLAN REF NO DD5

SHEET 93 OF 238 SHEETS

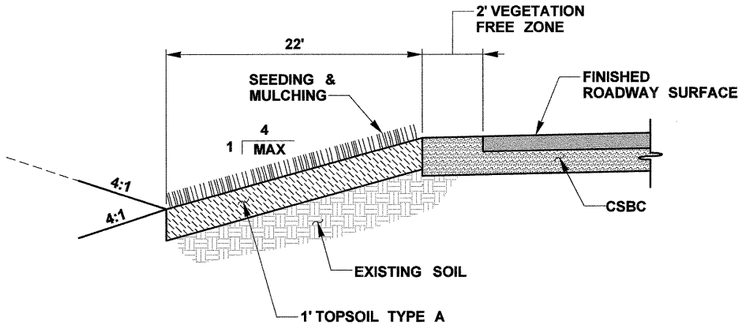

28/DR2 COMPOST-AMENDED VEGETATED FILTER STRIP (CAVFS) (A)

NOT TO SCALE

LM 224+33 (169.8' LT) TO LM 229+95 (105.1' LT)

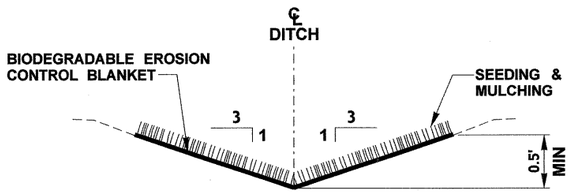

24/DR2 TYPICAL DITCH CROSS SECTION

NOT TO SCALE

NW DITCH

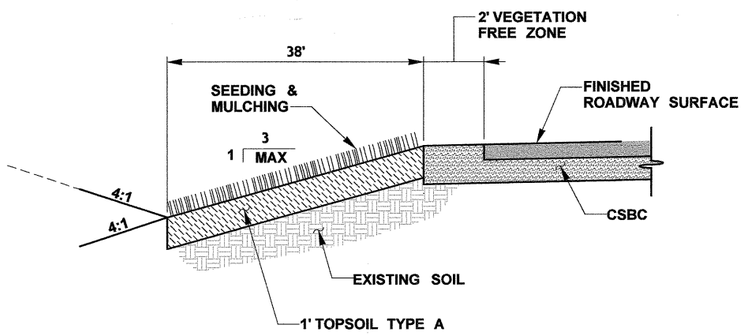

3/DR2 COMPOST-AMENDED VEGETATED FILTER STRIP (CAVFS) (D)

NOT TO SCALE

LM 218+50 (145.6' LT) TO LM 222+03 (221.6' LT)

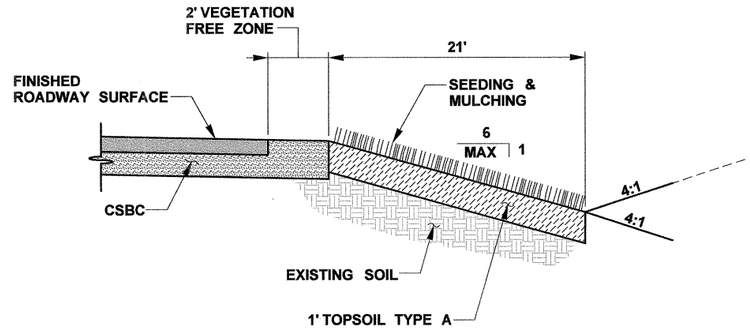

3/DR3 COMPOST-AMENDED VEGETATED FILTER STRIP (CAVFS) (B) (NORTH)

NOT TO SCALE

LM 230+01 (101.2' RT) TO LM 235+15 (85.0' RT)

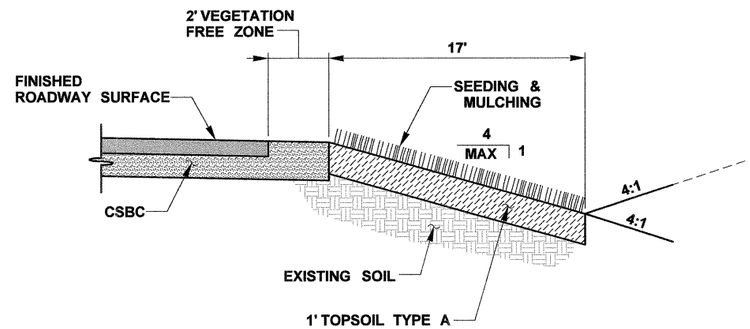

53/DR2 COMPOST-AMENDED VEGETATED FILTER STRIP (CAVFS) (B) (SOUTH)

NOT TO SCALE

LM 226+97 (141.6' RT) TO LM 230+01 (101.2' RT)

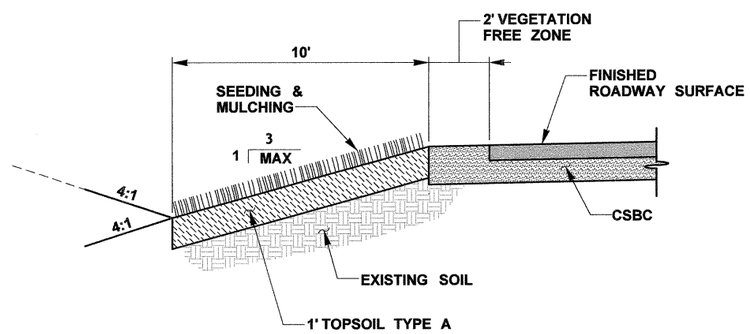

2/DR1 COMPOST-AMENDED VEGETATED FILTER STRIP (CAVFS) (E)

NOT TO SCALE

ES 114+45 (22.1' LT) TO ES 116+50 (29.8' LT)

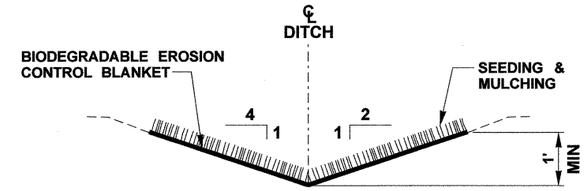

8/DR1 TYPICAL DITCH CROSS SECTION

NOT TO SCALE

SE DITCH 1+00 TO 2+51

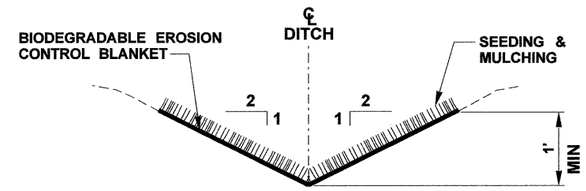

8/DR1 TYPICAL DITCH CROSS SECTION

NOT TO SCALE

SE DITCH 3+59 TO 8+83

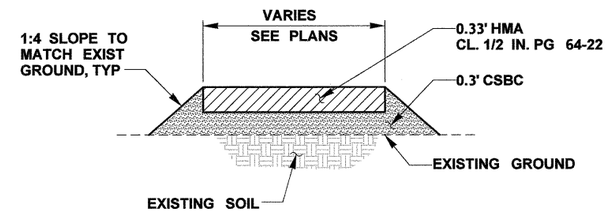

INFILTRATION POND ACCESS ROAD TYPICAL CROSS SECTION

NOT TO SCALE

FILE NAME	U:\PSO\Projects\Clients\1598-TulalipTribes\554-1598-095 116th-Ph4-PSE\99Svcs\CADD\DGN\PS&ESheets\BL1598033_DE_DD.dgn						
TIME	10:48:38 AM				REGION NO.	STATE	FED.AID PROJ.NO.
DATE	8/30/2017				10	WASH	
PLOTTED BY	purgabut				JOB NUMBER		
DESIGNED BY	C. BUITRAGO						
ENTERED BY	T. NABOURS				CONTRACT NO.		LOCATION NO.
CHECKED BY	D. PROCTOR						
APPROVED BY	H. LONGFELLOW						
		REVISION	DATE	BY			

P.E. STAMP BOX — DATE

P.E. STAMP BOX — DATE: 08-30-2017

TULALIP TRIBES — Parametrix

I-5 / 116TH STREET NE
INTERCHANGE IMPROVEMENTS
PHASE 4 RAMPS

DRAINAGE DETAILS

Plot 6

PLAN REF NO DD6

SHEET 94 OF 238 SHEETS

STRUCTURE NOTES - UTILITY

NOTE:
THE FIRST NUMBER OF THE "CODE" BELOW REFERS TO THE SHEET NO. OR THE SHEET REFERENCE NO. SHOWING THE CONSTRUCTION FEATURE.

THE SECOND NUMBER REFERS TO THE CONSTRUCTION FEATURE FOUND ON THAT SHEET.

CODE	LOCATION ⤵ \ UNIT OF MEASURE ➢	8 INCH SANITARY SEWER FORCE MAIN ON BRIDGE	8 INCH WATER LINE ON BRIDGE	2 INCH COMBINATION AIR RELEASE VALVE	1 INCH COMBINATION AIR RELEASE VALVE	CORE DRILLED BRIDGE DECK	SEE GENERAL NOTES
		L.F.	L.F.	EACH	EACH	EACH	
UT1-1	M 119+16 (92.3 LT) TO M 120+71 (81.8 LT)	155					1
UT1-2	M 120+00 (86.6 LT)			1		1	3, 5
UT2-1	M 119+26 (54.1 RT) TO M 120+80 (54.1 RT)		154				2
UT2-2	M 120+09 (54.1 RT)				1	1	4, 5
UT2-3	M 119+27 (67.3 RT) TO M 120+82 (73.1 RT)		155				2
UT2-4	M 120+11 (70.4 RT)				1	1	4, 5
	SHEET TOTAL	155	309	1	2	3	

GENERAL NOTES:

1. SEE "8" SANITARY SEWER FORCE MAIN ON BRIDGE " SPECIAL PROVISIONS.
2. SEE "8" WATER LINE ON BRIDGE " SPECIAL PROVISIONS.
3. SEE "2" COMBINATION AIR RELEASE VALVE " SPECIAL PROVISIONS.
4. SEE "1" COMBINATION AIR RELEASE VALVE " SPECIAL PROVISIONS.
5. SEE "CORE DRILLED BRIDGE DECK" SPECIAL PROVISIONS.

DESIGNED BY	C. BUITRAGO	
ENTERED BY	C. BUITRAGO	
CHECKED BY	R. HERMES	
PROJ. ENGR.	H. LONGFELLOW	
REGION ADM.		DATE

REGION NO.	STATE	FED. AID PROJ. NO.
10	WASH	
JOB NUMBER		
CONTRACT NO.		

TULALIP TRIBES
Parametrix

I-5 / 116TH STREET NE
INTERCHANGE IMPROVEMENTS
PHASE 4 RAMPS

STRUCTURE NOTES - UTILITY

USN1

LEGEND

- (1) STRUCTURE NOTE CODE
- EXISTING WATER / SSFM
- WATER / SSFM WITH INSULATION
- PIPE JOINT

CONSTRUCTION NOTES

(1) 2" COMBINATION AIR RELEASE VALVE, SEE SHEET UD1 FOR DISTANCE FROM PIPE JOINT AND SHEET UD3 FOR DETAIL.

GENERAL NOTES

1. SSFM 8" SHALL BE FULLY RESTRAINED AND EXTENDED AT EACH JOINT. TO REMOVE ANY SLACK FROM THE JOINT, THE JOINT CAN BE EXTENDED BY PULLING OUT ON THE PIPE AFTER THE RESTRAINED JOINT ASSEMBLY IS MADE.
2. PIPE LAYOUT AND JOINT SPACINGS ARE BASED ON LENGTH SECTIONS OF 8" DUCTILE IRON PIPE SHOWN IN PLAN.
3. VERIFY THE LOCATION OF THE EXISTING 8" SSFM FLANGED ENDS, CONCRETE INSERTS, AND UTILITY BLOCKOUTS IN THE EXISTING BRIDGE STRUCTURE BEFORE CONSTRUCTION AND IMMEDIATELY NOTIFY THE ENGINEER OF THE DISCRPANCIES FOUND IN THE PLANS.
4. SEE SPECIAL PROVISIONS SECTION 7-17 FOR ITEM "8" SANITARY SEWER FORCE MAIN ON BRIDGE", MATERIALS, CONSTRUCTION, MEASUREMENT, AND PAYMENT REQUIREMENTS.

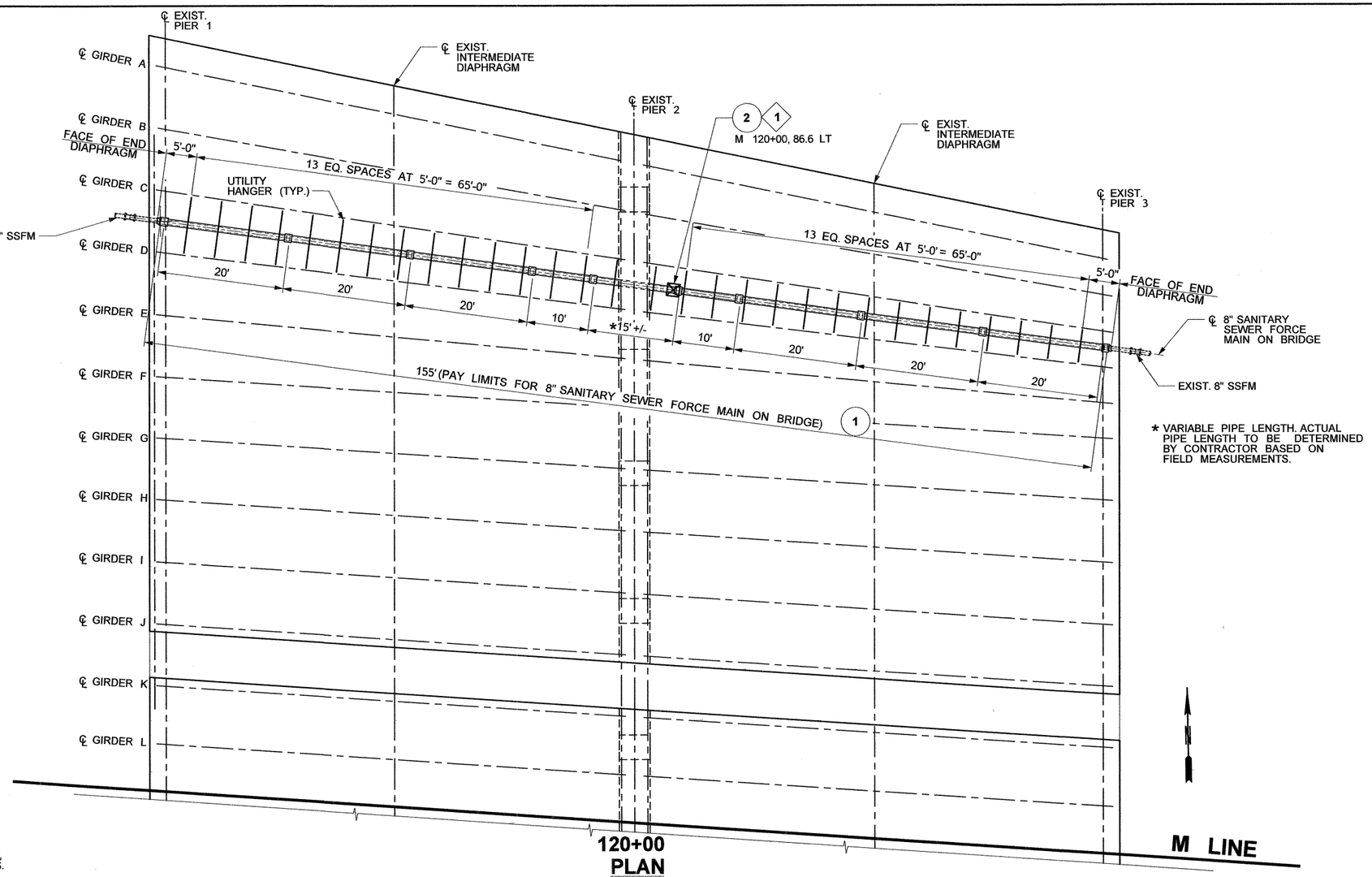

120+00
PLAN
1"=10'

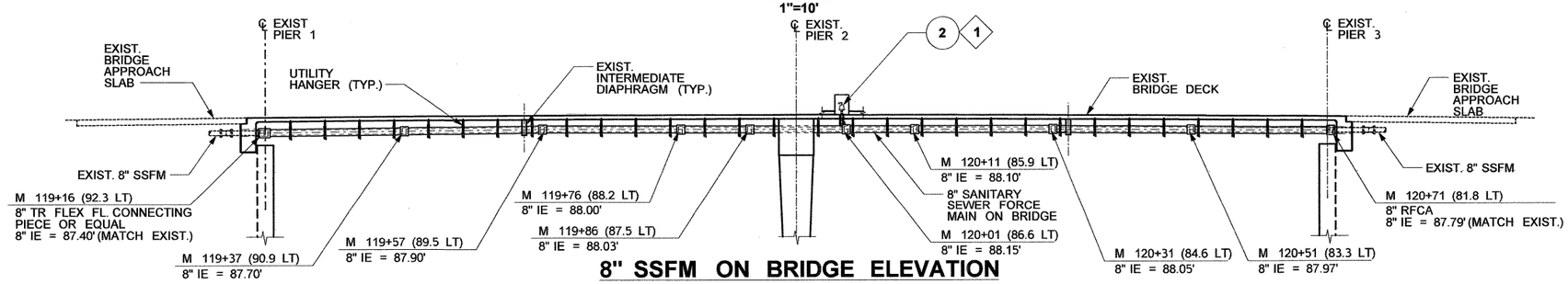

8" SSFM ON BRIDGE ELEVATION
1"=10'

FILE NAME	U:\PSO\Projects\Clients\1598-TulalipTribes\554-1598-095 116th-Ph4-PSE\99Svcs\CADD\DGN\Bridge\BL_1598033_BG_UT_1.dgn						
TIME	1:37:10 PM				REGION NO. 10	STATE WASH	FED.AID PROJ.NO.
DATE	8/25/2017				JOB NUMBER		
PLOTTED BY	purgabut						
DESIGNED BY	C. BUITRAGO				CONTRACT NO.		LOCATION NO.
ENTERED BY	A. VALENCIA						
CHECKED BY	R. HERMES						
APPROVED BY	H. LONGFELLOW						
REGIONAL ADM.		REVISION	DATE	BY			

P.E. STAMP BOX — DATE

ALEXANDER BUITRAGO, STATE OF WASHINGTON, 39427, REGISTERED PROFESSIONAL ENGINEER — 08-29-2017 — DATE — P.E. STAMP BOX

TULALIP TRIBES — Parametrix

I-5 / 116TH STREET NE INTERCHANGE IMPROVEMENTS PHASE 4 RAMPS

SANITARY SEWER FORCE MAIN LAYOUT

Plot 1
PLAN REF NO UT1
SHEET 96 OF 238 SHEETS

LEGEND

- (1) STRUCTURE NOTE CODE
- EXISTING WATER / SSFM
- WATER / SSFM WITH INSULATION
- PIPE JOINT

CONSTRUCTION NOTES

(1) 2" COMBINATION AIR RELEASE VALVE, SEE SHEET UD1 FOR DISTANCE FROM PIPE JOINT AND SHEET UD3 FOR DETAIL.

(2) 1" COMBINATION AIR RELEASE VALVE, SEE SHEET UD2 FOR DISTANCE FROM PIPE JOINT AND SHEET UD3 FOR DETAIL.

GENERAL NOTES

1. EXIST. 8" WATER LINE SHALL BE FULLY RESTRAINED AND EXTENDED AT EACH JOINT TO REMOVE ANY SLACK FROM THE JOINT. THE JOINT CAN BE EXTENDED AT EACH JOINT BY PULLING OUT ON THE PIPE AFTER THE RESTRAINED JOINT ASSEMBLY IS MADE.
2. PIPE LAYOUT AND JOINT SPACINGS ARE BASED ON LENGTH SECTIONS OF 8" DUCTILE IRON PIPE SHOWN IN PLAN.
3. VERIFY THE LOCATION OF THE EXISTING UTILITY FLANGED ENDS, CONCRETE INSERTS, AND UTILITY BLOCKOUTS IN THE EXISTING BRIDGE STRUCTURE BEFORE CONSTRUCTION AND IMMEDIATELY NOTIFY THE ENGINEER OF THE DISCRPANCIES FOUND IN THE PLANS.
4. SEE SPECIAL PROVISIONS SECTION 7-09 FOR ITEM "8" WATER LINE ON BRIDGE", MATERIALS, CONSTRUCTION, MEASUREMENT, AND PAYMENT REQUIREMENTS.

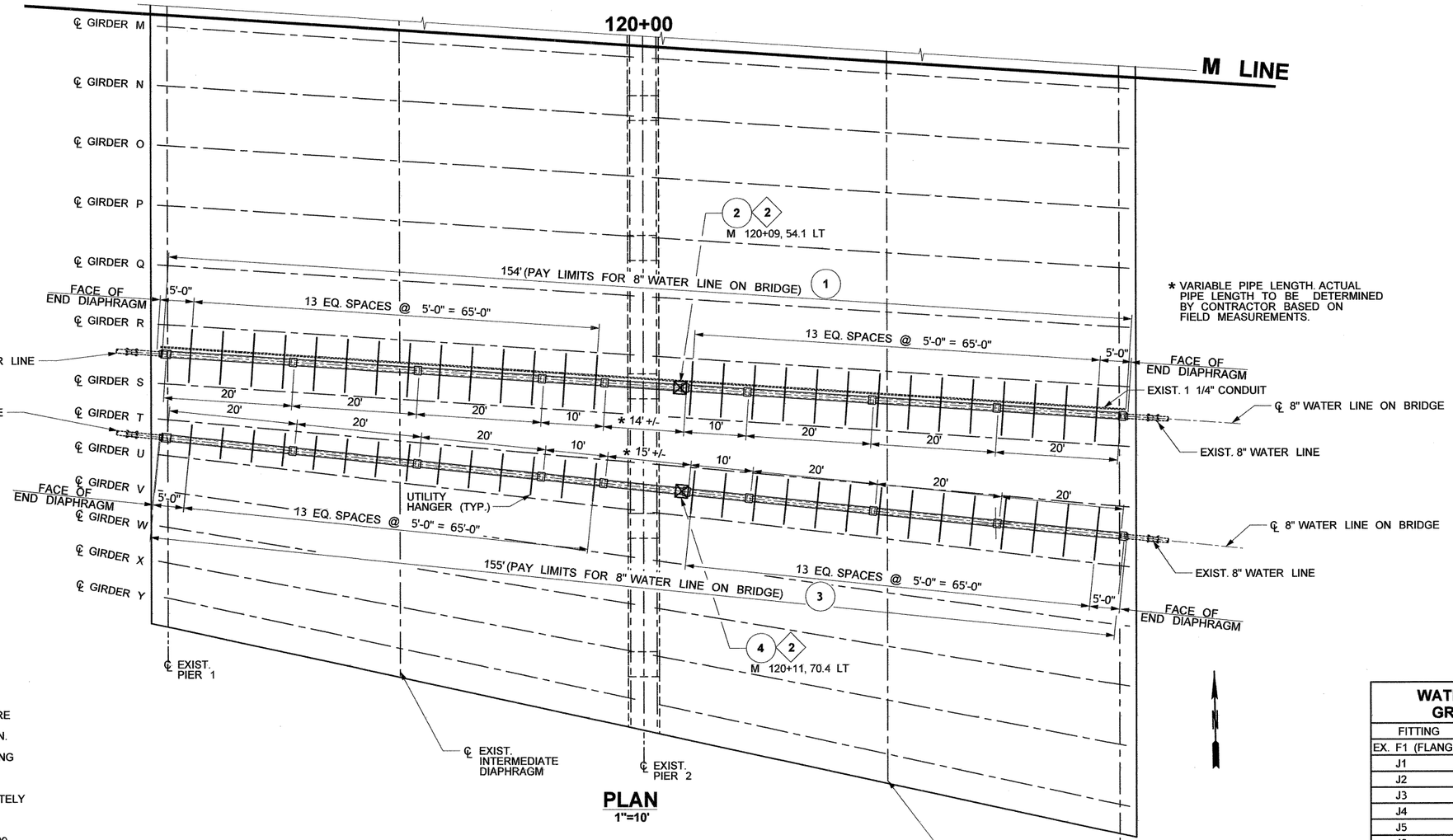

PLAN
1"=10'

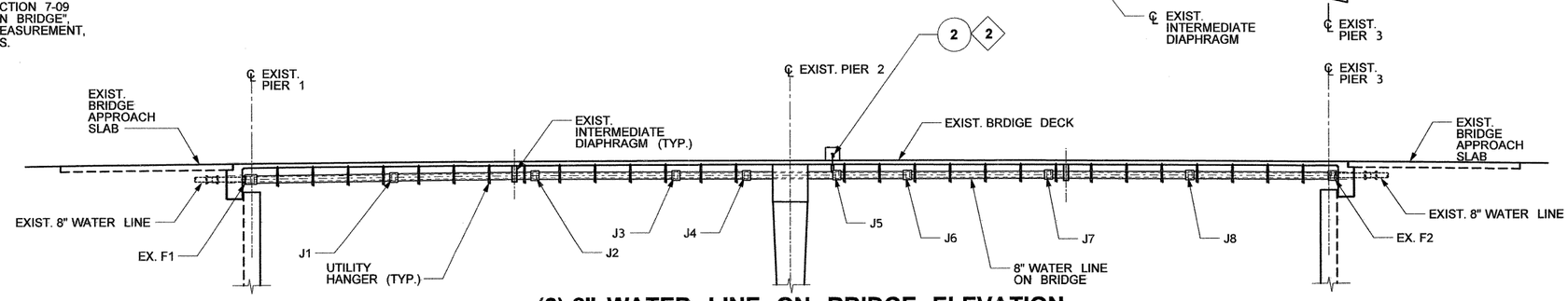

(2) 8" WATER LINE ON BRIDGE ELEVATION
BETWEEN GIRDER R AND S (SHOWN) GIRDER T AND U (SIMILAR)
1"=10'

WATER LINE BETEWEEN GRIDLINES R AND S

FITTING	STA / OFFSET	I.E.
EX. F1 (FLANGE)	M 119+26 (54.1' RT)	88.28'
J1	M 119+46 (54.1' RT)	88.47'
J2	M 119+66 (54.1' RT)	88.60'
J3	M 119+86 (54.1' RT)	88.65'
J4	M 119+96 (54.1' RT)	88.64'
J5	M 120+10 (54.1' RT)	88.66'
J6	M 120+20 (54.1' RT)	88.64'
J7	M 120+40 (54.1' RT)	88.61'
J8	M 120+60 (54.1' RT)	88.49'
EX. F2 (FLANGE)	M 120+80 (54.1' RT)	88.30'

WATER LINE BETEWEEN GRIDLINES T AND U

FITTING	STA / OFFSET	I.E.
EX. F1 (FLANGE)	M 119+27 (67.3' RT)	88.02'
J1	M 119+47 (68.2' RT)	88.16'
J2	M 119+67 (68.9' RT)	88.20'
J3	M 119+87 (69.7' RT)	88.31'
J4	M 119+97 (70.0' RT)	88.32'
J5	M 120+12 (70.5' RT)	88.35'
J6	M 120+22 (70.9' RT)	88.32'
J7	M 120+42 (71.6' RT)	88.23'
J8	M 120+62 (72.4' RT)	88.11'
EX. F2 (FLANGE)	M 120+82 (73.1' RT)	87.90'

FILE NAME	U:\PSO\Projects\Clients\1598-TulalipTribes\554-1598-095 116th-Ph4-PSE\99Svcs\CADD\DGN\Bridge\BL_1598033_BG_UT_1.dgn					
TIME	1:37:43 PM					
DATE	8/25/2017					
PLOTTED BY	purgabut					
DESIGNED BY	C. BUITRAGO					
ENTERED BY	A. VALENCIA					
CHECKED BY	R. HERMES					
APPROVED BY	H. LONGFELLOW					
REGIONAL ADM.		REVISION	DATE	BY		

REGION NO.	STATE	FED.AID PROJ.NO.
10	WASH	
JOB NUMBER		
CONTRACT NO.		LOCATION NO.

DATE
P.E. STAMP BOX

DONALD CRAIG ALEXANDER BUITRAGO, STATE OF WASHINGTON, 49427, REGISTERED PROFESSIONAL ENGINEER
08-29-2017
DATE
P.E. STAMP BOX

TULALIP TRIBES
Parametrix

I-5 / 116TH STREET NE
INTERCHANGE IMPROVEMENTS
PHASE 4 RAMPS

WATER LINE ON BRIDGE
LAYOUT

Plot 2
PLAN REF NO
UT2
SHEET 97 OF 238 SHEETS

HANGER SUPPORT NOTES:

1. ALL MATERIALS SHALL BE GALVANIZED AFTER FABRICATION PER AASHTO M 111 OR AASHTO M 232 EXCEPT PIPE ROLLERS.
2. PAINT ROLLERS WITH THREE COATS OF GALVANIZING REPAIR PAINT. SEE STD. SPEC. SECTION 9-08.1(2)B.
3. DIMENSION "L" BETWEEN GIRDERS VARIES FOR EACH GIRDER SPACING FOR THE LENGTH OF THE BRIDGE. "L" RANGES BETWEEN 5'-9" AND 9'-9".

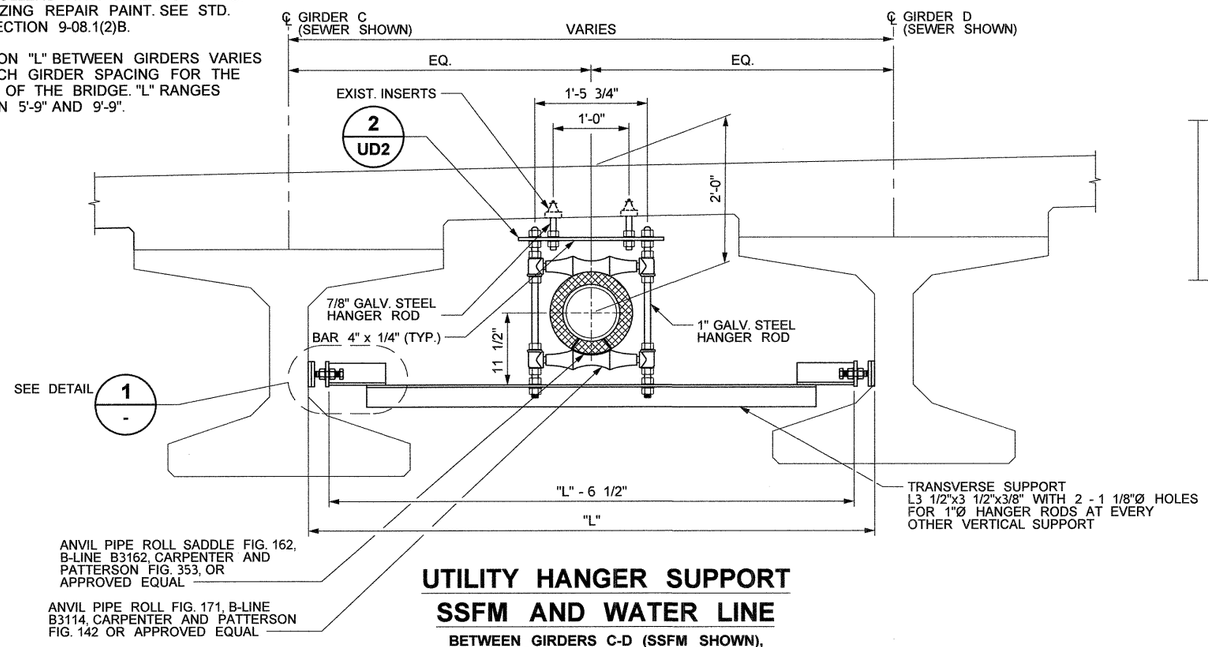

UTILITY HANGER SUPPORT
SSFM AND WATER LINE

BETWEEN GIRDERS C-D (SSFM SHOWN), AND T-U (WATER SIMILAR)
NOT TO SCALE

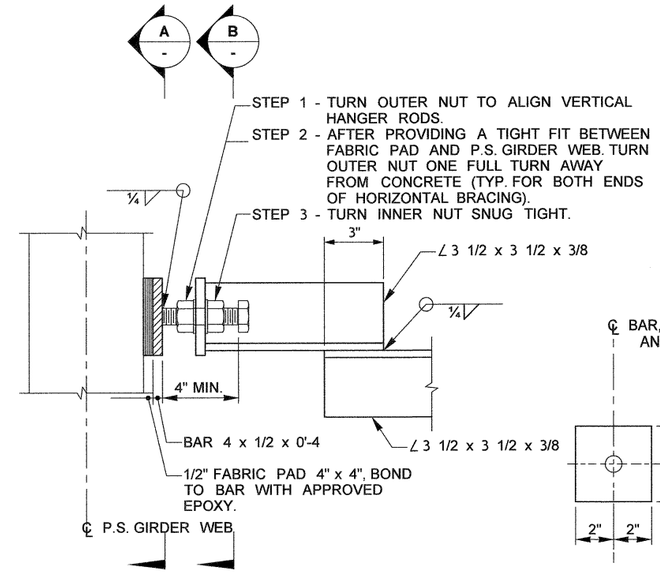

DETAIL 1 -
NOT TO SCALE

NOTES

1. ALL SANITARY SEWER FORCE MAIN AND WATER LINE UTILITY HANGER ASSEMBLIES SHALL BE GALVANIZED AFTER FABRICATION IN ACCORDANCE WITH AASHTO M111 OR AASHTO M232.
2. PIPE INSULATION WRAP TO DISCONTINUE AT INTERMEDIATE DIAPHRAGM AND PIER 2 DIAPHRAGM BLOCKOUTS. FILL ALL ANNULAR SPACES BETWEEN BLOCKOUTS AND PIPES WITH SPRAYABLE POLYURETHANE INSULATING FOAM FOR A MINUMUM DEPTH OF 4".
3. FOR SSFM AND WATER LINE TESTING. TEST PLUG SHALL BE SUITABLE FOR PRESSURE TEST CONFORMING TO STANDARD SPECIFICATION 7-09.3(23). TEST PLUG SHALL BE RATED UP TO 350 PSI. AT EXISTING PIER 3, TESTING SHALL BE COMPLETED BEFORE THE PIPE SEGMENT THAT CONNECTS TO THE EXISTING FLANGE IS INSTALLED. AFTER TESTING AND DISINFECTION IS COMPLETE, THE TEST PLUG SHALL BE REMOVED AND PIPE SEGMENT AND END CONNECTION SHALL BE COMPLETED.

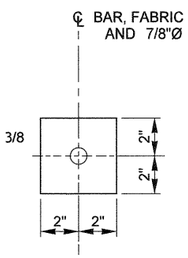

SECTION A -
NOT TO SCALE

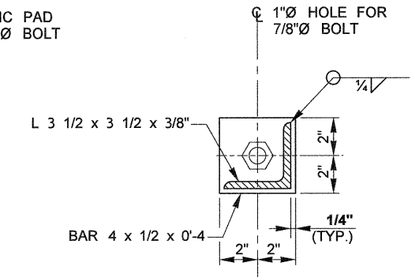

SECTION B -
NOT TO SCALE

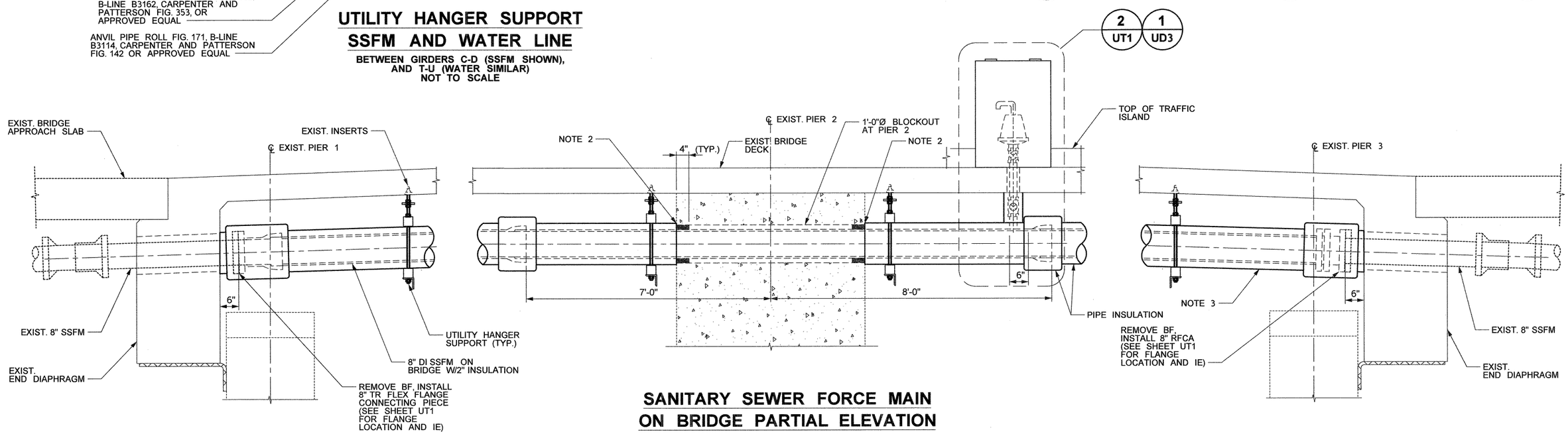

SANITARY SEWER FORCE MAIN
ON BRIDGE PARTIAL ELEVATION

BETWEEN GIRDERS C-D (SEWER)
NOT TO SCALE

FILE NAME	U:\PSO\Projects\Clients\1598-TulalipTribes\554-1598-095 116th-Ph4-PSE\99Svcs\CADD\DGN\Bridge\BL_1598033_BG_UT_1.dgn						
TIME	4:02:07 PM				REGION NO.	STATE	FED.AID PROJ.NO.
DATE	8/29/2017				10	WASH	
PLOTTED BY	valenalv				JOB NUMBER		
DESIGNED BY	C. BUITRAGO						
ENTERED BY	A. VALENCIA				CONTRACT NO.		LOCATION NO.
CHECKED BY	R. HERMES						
APPROVED BY	H. LONGFELLOW						
REGIONAL ADM.		REVISION	DATE	BY			

DATE
P.E. STAMP BOX

CRAIG ALEXANDER BUITRAGO, STATE OF WASHINGTON, 19427, REGISTERED PROFESSIONAL ENGINEER
08-29-2017
DATE
P.E. STAMP BOX

TULALIP TRIBES
Parametrix

I-5 / 116TH STREET NE
INTERCHANGE IMPROVEMENTS
PHASE 4 RAMPS

UTILITY DETAILS

Plot 3
PLAN REF NO
UD1
SHEET 98 OF 238 SHEETS

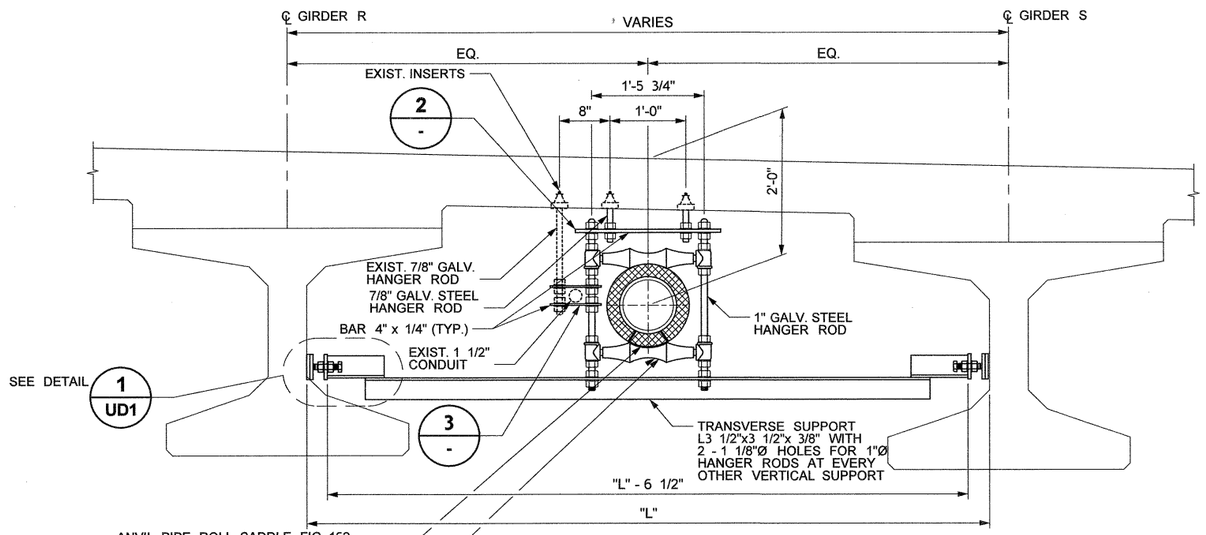

UTILITY HANGER SUPPORT
WATER LINE

BETWEEN GIRDERS R-S
NOT TO SCALE

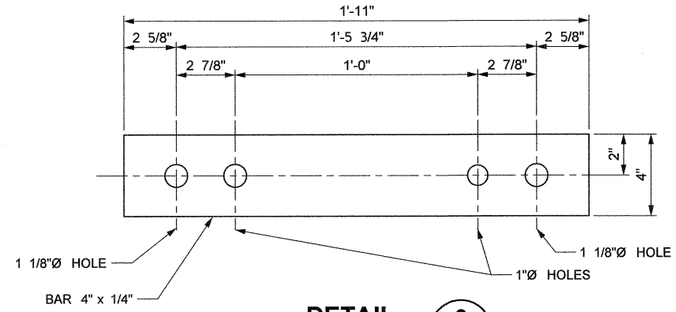

DETAIL 2 / UD1
NOT TO SCALE

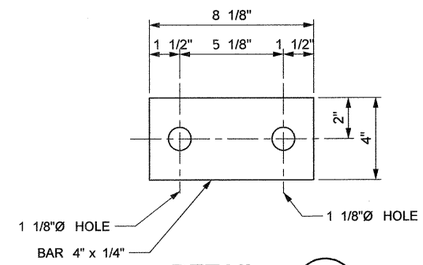

DETAIL 3 / -
NOT TO SCALE

NOTES

1. ALL SANITARY SEWER FORCE MAIN AND WATER LINE UTILITY HANGER ASSEMBLIES SHALL BE GALVANIZED AFTER FABRICATION IN ACCORDANCE WITH AASHTO M111 OR AASHTO M232.
2. PIPE INSULATION WRAP TO DISCONTINUE AT INTERMEDIATE DIAPHRAGM AND PIER 2 DIAPHRAGM BLOCKOUTS. FILL ALL ANNULAR SPACES BETWEEN BLOCKOUTS AND PIPES WITH SPRAYABLE POLYURETHANE INSULATING FOAM FOR A MINUMUM DEPTH OF 4".
3. FOR SSFM AND WATER LINE TESTING. TEST PLUG SHALL BE SUITABLE FOR PRESSURE TEST CONFORMING TO STANDARD SPECIFICATION 7-09.3(23). TEST PLUG SHALL BE RATED UP TO 350 PSI. TO ACCOMMODATE SPACE CONSTRAINTS AT THE FLANGE CONNECTION AT EXISTING PIER 3, TESTING SHALL BE COMPLETED BEFORE THE PIPE SEGMENT THAT CONNECTS TO THE FLANGE IS INSTALLED. AFTER TESTING AND DISINFECTION IS COMPLETE, THE TEST PLUG SHALL BE REMOVED AND PIPE SEGMENT AND END CONNECTION SHALL BE COMPLETED.

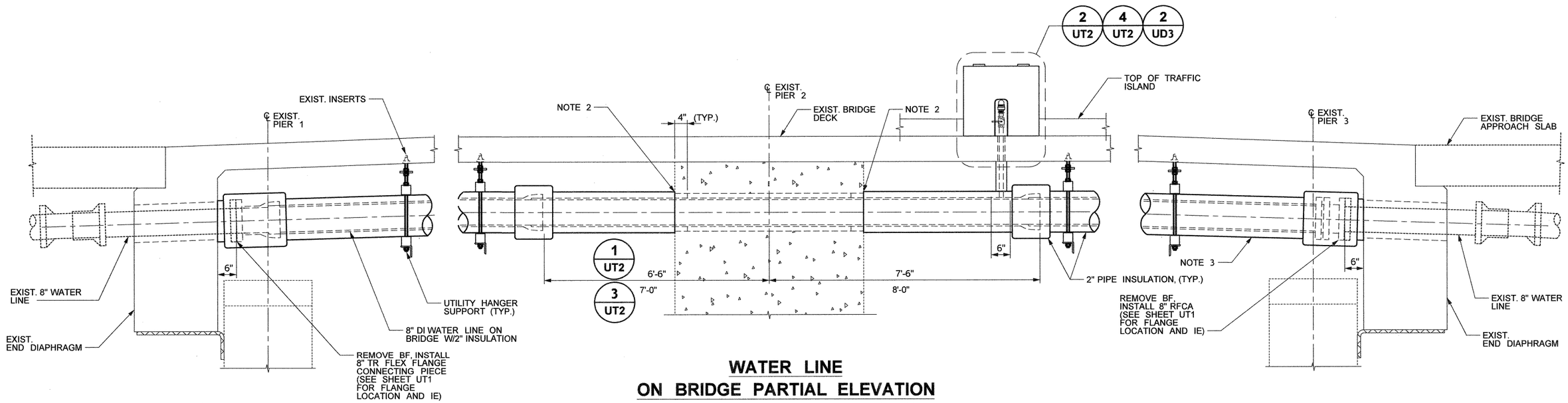

WATER LINE
ON BRIDGE PARTIAL ELEVATION

BETWEEN GIRDERS R-S (SHOWN) AND T-U (SIMILAR)
NOT TO SCALE

FILE NAME	U:\PSO\Projects\Clients\1598-TulalipTribes\554-1598-095 116th-Ph4-PSE\99Svcs\CADD\DGN\Bridge\BL_1598033_BG_UT_1.dgn						
TIME	4:02:24 PM				REGION NO. 10	STATE WASH	FED.AID PROJ.NO.
DATE	8/29/2017						
PLOTTED BY	valenalv				JOB NUMBER		
DESIGNED BY	C. BUITRAGO						
ENTERED BY	A. VALENCIA				CONTRACT NO.		LOCATION NO.
CHECKED BY	R. HERMES						
APPROVED BY	H. LONGFELLOW						
REGIONAL ADM.		REVISION	DATE	BY			

P.E. STAMP BOX — DATE

P.E. STAMP BOX — 08-29-2017 DATE

TULALIP TRIBES — Parametrix

I-5 / 116TH STREET NE INTERCHANGE IMPROVEMENTS PHASE 4 RAMPS

UTILITY DETAILS

Plot 4

PLAN REF NO **UD2**

SHEET **99** OF **238** SHEETS

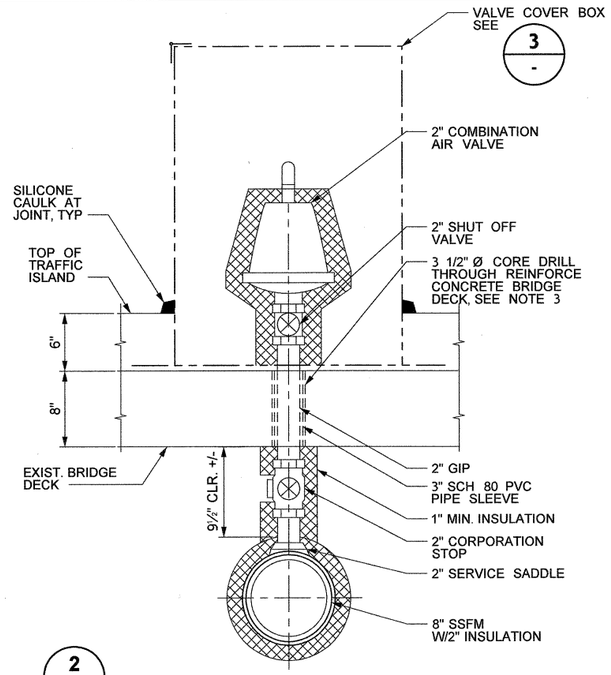

2 / UT1 **2" COMBINATION AIR RELEASE VALVE**

DETAIL 1 -
NOT TO SCALE

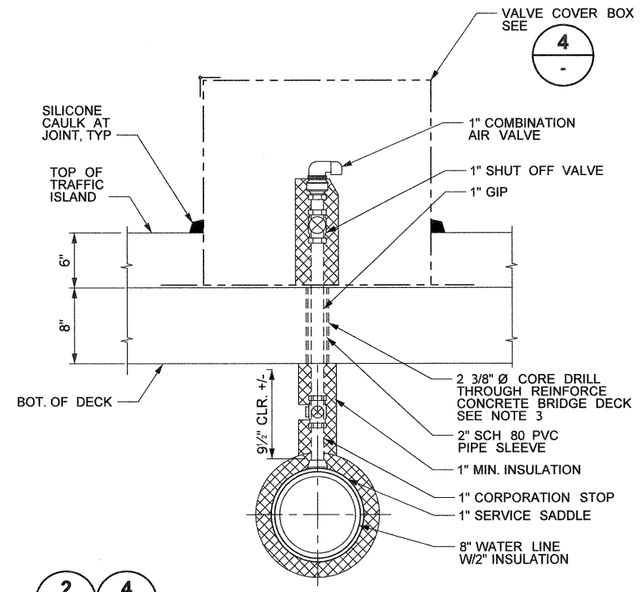

2 / UT2 4 / UT2 **1" COMBINATION AIR RELEASE VALVE**

DETAIL 2 -
NOT TO SCALE

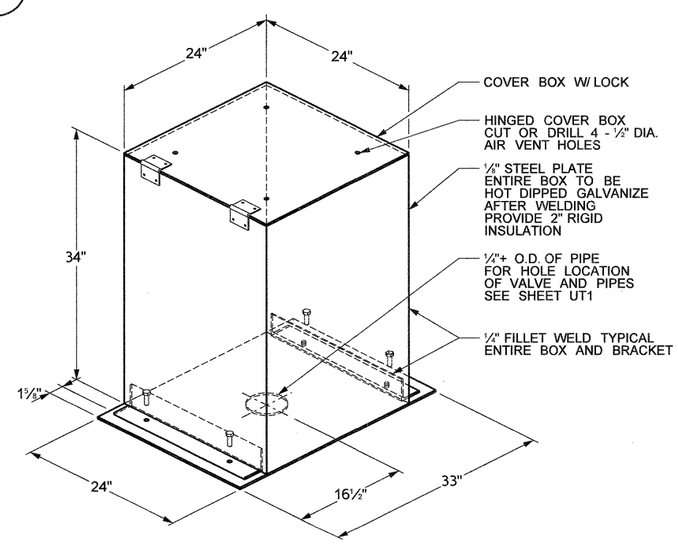

DETAIL 3 -
NOT TO SCALE

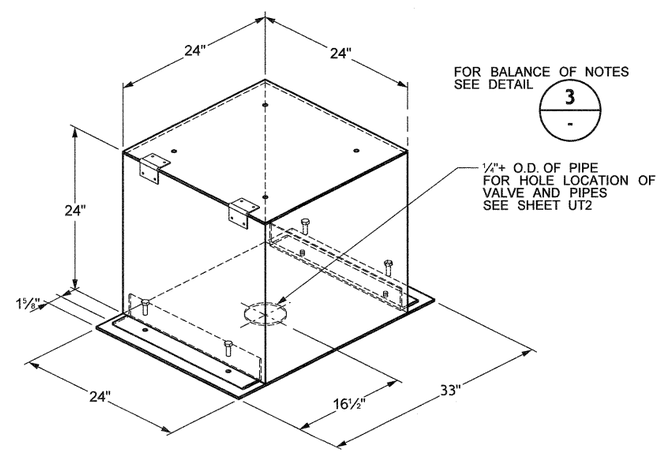

DETAIL 4 -
NOT TO SCALE

NOTES

1. SEE SPECIAL PROVISIONS SECTION 7-12 FOR ITEM "2" COMBINATION AIR RELEASE VALVE".
2. SEE SPECIAL PROVISIONS SECTION 7-12 FOR ITEM "1" COMBINATION AIR RELEASE VALVE".
3. SEE SPECIAL PROVISIONS SECTION 6-02 FOR ITEM " CORE DRILLED BRIDGE DECK".

FILE NAME	U:\PSO\Projects\Clients\1598-TulalipTribes\554-1598-095 116th-Ph4-PSE\99Svcs\CADD\DGN\Bridge\BL_1598033_BG_UT_1.dgn						
TIME	4:02:40 PM				REGION NO.	STATE	FED.AID PROJ.NO.
DATE	8/29/2017				10	WASH	
PLOTTED BY	valenalv				JOB NUMBER		
DESIGNED BY	C. BUITRAGO						
ENTERED BY	A. VALENCIA				CONTRACT NO.		LOCATION NO.
CHECKED BY	R. HERMES						
APPROVED BY	H. LONGFELLOW						
REGIONAL ADM.		REVISION	DATE	BY			

P.E. STAMP BOX — DATE

P.E. STAMP BOX — 08-29-2017 DATE

TULALIP TRIBES — Parametrix

I-5 / 116TH STREET NE INTERCHANGE IMPROVEMENTS PHASE 4 RAMPS

UTILITY DETAILS

Plot 4

PLAN REF NO: UD3

SHEET 100 OF 238 SHEETS

LEGEND

- EXISTING MINOR CONTOUR
- 10 EXISTING MAJOR CONTOUR
- NEW MINOR CONTOUR
- 10 NEW MAJOR CONTOUR
- NEW DITCH BOTTOM
- HVF — HVF HIGH VISIBILTY FENCE
- COMPOST SOCKS
- COMPOST AMENDED VEGETATED FILTER STRIPS (CAVFS) - 12" TOPSOIL A - SEE SHEET DD6 FOR MORE INFORMATION
- COMPOST AMENDED BIOFILTRATION SWALE (CABS) - 8" TOPSOIL A - SEE SHEET DD5 FOR MORE INFORMATION
- SOIL AMENDMENT AREAS - SEE SHEETS LA1-LA5 AND SOIL PREPARATION DETAIL SHEET LD1 FOR MORE INFORMATION
- STORMWATER PRESETTLING POND BOTTOM AREA - 18" DEPTH COMPACTED TILL - SEE SHEET DD3 FOR MORE INFORMATION

CONSTRUCTION NOTES:

1. COMPOST SOCKS SHALL REMAIN IN PLACE AFTER COMPLETION OF PROJECT

NOTES:

SEE QTAB ON SHEET CN2 FOR SOIL AMENDMENT QUANTITY INFORMATION

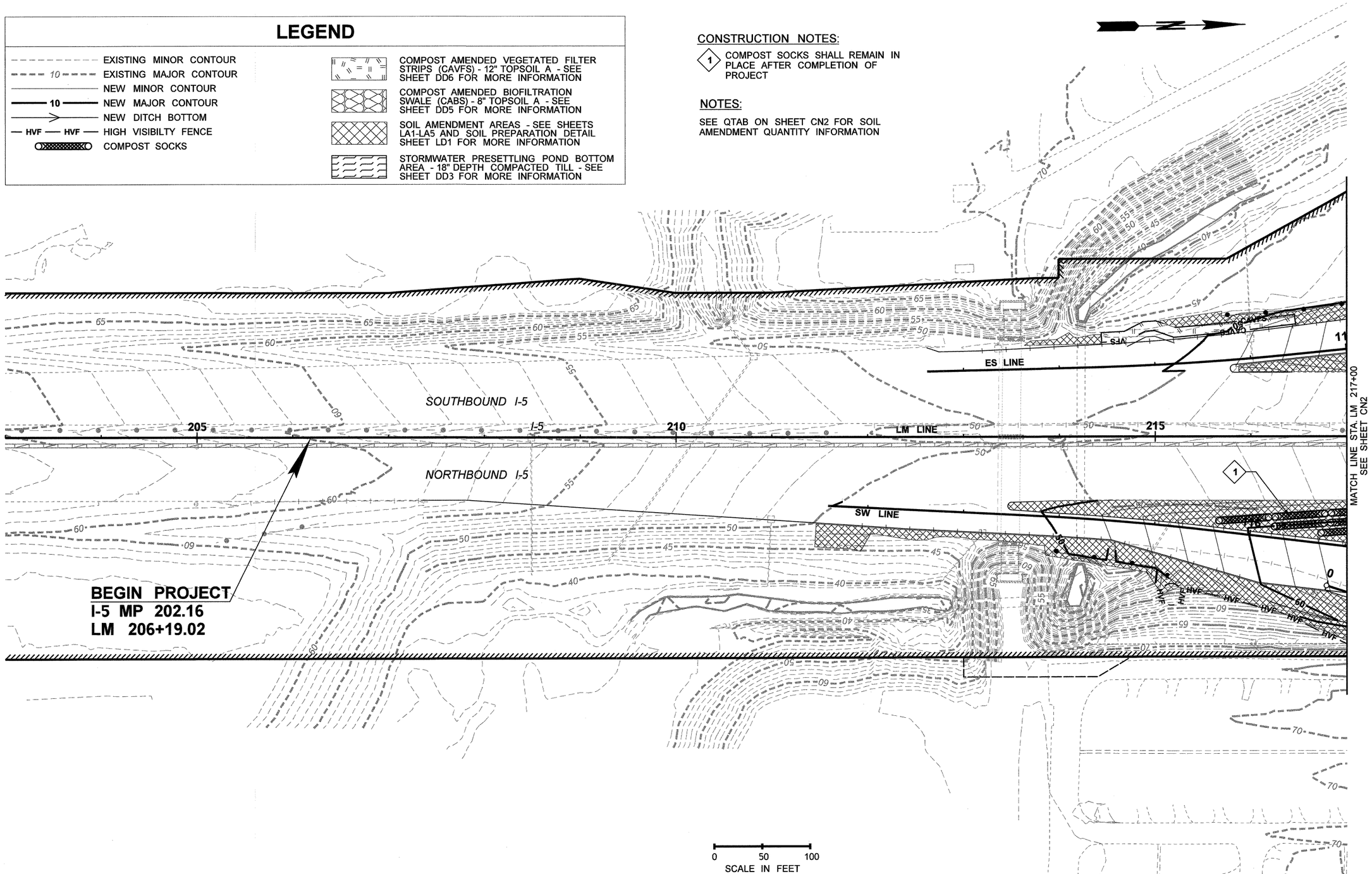

FILE NAME	U:\PSO\Projects\Clients\1598-TulalipTribes\554-1598-095 116th-Ph4-PSE\99Svcs\CADD\DGN\PS&ESheets\BL1598033_PS_CN.dgn						
TIME	11:41:22 AM				REGION NO.	STATE	FED.AID PROJ.NO.
DATE	8/30/2017				10	WASH	
PLOTTED BY	purgabut				JOB NUMBER		
DESIGNED BY	M. TSUN						
ENTERED BY	B. PURGANAN						
CHECKED BY	J. SWENSON				CONTRACT NO.		LOCATION NO.
APPROVED BY	S. OLLING						
		REVISION	DATE	BY			

P.E. STAMP BOX — DATE

STATE OF WASHINGTON — JENS SWENSON — 686 EXP. 10/31/2017 — LANDSCAPE ARCHITECT

P.E. STAMP BOX — 8/31/17 DATE

TULALIP TRIBES — Parametrix

I-5 / 116TH STREET NE
INTERCHANGE IMPROVEMENTS
PHASE 4 RAMPS

GRADING SOIL AND PREPARATION PLAN

Plot 2

PLAN REF NO CN1

SHEET 101 OF 238 SHEETS

MATCH LINE STA. M 116+00
SEE SHEET CN4

MATCH LINE STA. LM 217+00
SEE SHEET CN1

MATCH LINE STA. LM 229+00
SEE SHEET CN3

MATCH LINE STA. M 124+00
SEE SHEET CN5

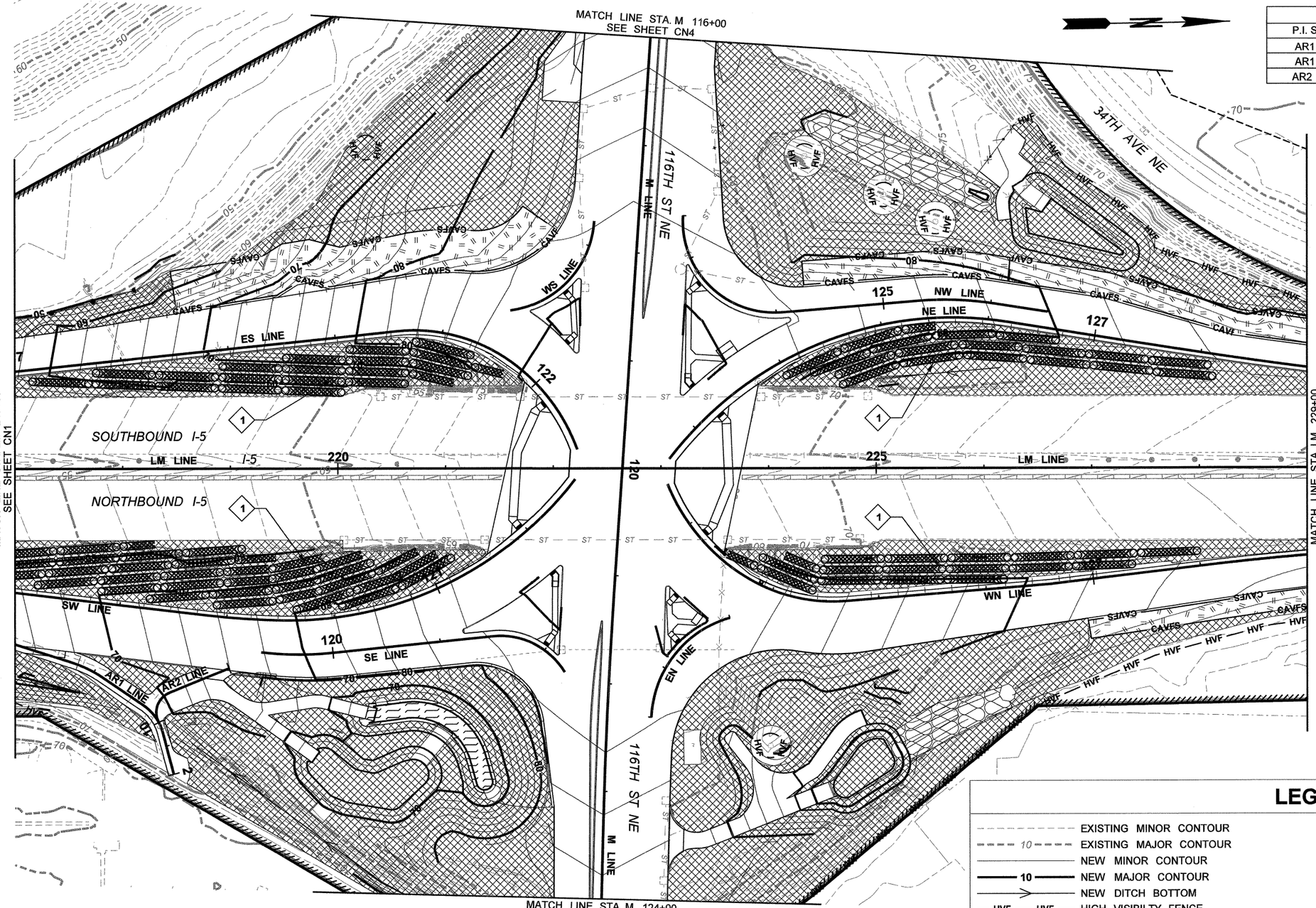

CURVE DATA				
P.I. STATION	DELTA	RADIUS	TANGENT	LENGTH
AR1 0+93.27	16°31'27"RT	105.00'	15.25'	30.28'
AR1 1+71.70	41°11'148"RT	45.00'	16.91'	32.36'
AR2 10+22.07	95°38'13"RT	20.00'	22.07'	33.38'

QUANTITY TAB		
SYMBOL	ITEM	QUANTITY
	SOIL AMENDMENT (ACRE)	8.02

CONSTRUCTION NOTES:

1. COMPOST SOCKS SHALL REMAIN IN PLACE AFTER COMPLETION OF PROJECT

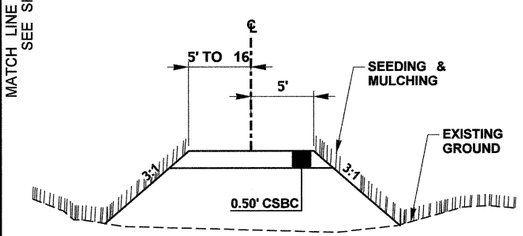

MAINTENANCE ACCESS ROAD SECTION

LEGEND

- EXISTING MINOR CONTOUR
- 10 EXISTING MAJOR CONTOUR
- NEW MINOR CONTOUR
- 10 NEW MAJOR CONTOUR
- NEW DITCH BOTTOM
- HVF HVF HIGH VISIBILTY FENCE
- COMPOST SOCKS
- COMPOST AMENDED VEGETATED FILTER STRIPS (CAVFS) - 12" TOPSOIL A - SEE SHEET DD6 FOR MORE INFORMATION
- COMPOST AMENDED BIOFILTRATION SWALE (CABS) - 8" TOPSOIL A - SEE SHEET DD5 FOR MORE INFORMATION
- SOIL AMENDMENT AREAS - SEE SHEETS LA1-LA5 AND SOIL PREPARATION DETAIL SHEET LD1 FOR MORE INFORMATION
- STORMWATER PRESETTLING POND BOTTOM AREA - 18" DEPTH COMPACTED TILL - SEE SHEET DD3 FOR MORE INFORMATION

0 50 100
SCALE IN FEET

FILE NAME	U:\PSO\Projects\Clients\1598-TulalipTribes\554-1598-095 116th-Ph4-PSE\99Svcs\CADD\DGN\PS&ESheets\BL1598033_PS_CN.dgn
TIME	11:42:28 AM
DATE	8/30/2017
PLOTTED BY	purgabut
DESIGNED BY	M. TSUN
ENTERED BY	B. PURGANAN
CHECKED BY	J. SWENSON
APPROVED BY	S. OLLING

REVISION	DATE	BY

REGION NO.	STATE	FED.AID PROJ.NO.
10	WASH	
JOB NUMBER		
CONTRACT NO.		LOCATION NO.

DATE
P.E. STAMP BOX

STATE OF WASHINGTON
JENS SWENSON
LANDSCAPE ARCHITECT
NO. 888 EXP. 10/3/2017

8/31/17
DATE
P.E. STAMP BOX

TULALIP TRIBES
Parametrix

I-5 / 116TH STREET NE INTERCHANGE IMPROVEMENTS PHASE 4 RAMPS

GRADING SOIL AND PREPARATION PLAN

Plot 3

PLAN REF NO
CN2

SHEET 102 OF 238 SHEETS

MATCH LINE STA. LM 229+00
SEE SHEET CN2

34TH AVE NE

CAVES

NE LINE

SOUTHBOUND I-5

230 235 I-5 LM LINE 240

NORTHBOUND I-5

WN LINE 132

CAVFS

HVF

END PROJECT
I-5 MP 202.74
LM 236+84

LEGEND

- EXISTING MINOR CONTOUR
- 10 EXISTING MAJOR CONTOUR
- NEW MINOR CONTOUR
- 10 NEW MAJOR CONTOUR
- NEW DITCH BOTTOM
- HVF HVF HIGH VISIBILTY FENCE
- COMPOST SOCKS
- COMPOST AMENDED VEGETATED FILTER STRIPS (CAVFS) - 12" TOPSOIL A - SEE SHEET DD6 FOR MORE INFORMATION
- COMPOST AMENDED BIOFILTRATION SWALE (CABS) - 8" TOPSOIL A - SEE SHEET DD5 FOR MORE INFORMATION
- SOIL AMENDMENT AREAS - SEE SHEETS LA1-LA5 AND SOIL PREPARATION DETAIL SHEET LD1 FOR MORE INFORMATION
- STORMWATER PRESETTLING POND BOTTOM AREA - 18" DEPTH COMPACTED TILL - SEE SHEET DD3 FOR MORE INFORMATION

NOTES:

SEE QTAB ON SHEET CN2 FOR SOIL AMENDMENT QUANTITY INFORMATION

0 50 100
SCALE IN FEET

FILE NAME	U:\PSO\Projects\Clients\1598-TulalipTribes\554-1598-095 116th-Ph4-PSE\99Svcs\CADD\DGN\PS&ESheets\BL1598033_PS_CN.dgn
TIME	11:42:48 AM
DATE	8/30/2017
PLOTTED BY	purgabut
DESIGNED BY	M. TSUN
ENTERED BY	B. PURGANAN
CHECKED BY	J. SWENSON
APPROVED BY	S. OLLING

REVISION	DATE	BY

REGION NO.	STATE	FED.AID PROJ.NO.
10	WASH	
JOB NUMBER		
CONTRACT NO.		LOCATION NO.

P.E. STAMP BOX DATE

STATE OF WASHINGTON JENS SWENSON LANDSCAPE ARCHITECT NO. 698 EXP. 10/31/2017

8/31/17
P.E. STAMP BOX DATE

TULALIP TRIBES
Parametrix

I-5 / 116TH STREET NE
INTERCHANGE IMPROVEMENTS
PHASE 4 RAMPS

GRADING SOIL AND PREPARATION PLAN

Plot 4
PLAN REF NO
CN3
SHEET 103 OF 238 SHEETS

QUIL CEDA BLVD

M LINE

116TH ST NE

M LINE

A LINE

34TH AVE NE

US LINE

105

110

115

325

322

320

MATCH LINE STA. M 116+00
SEE SHEET CN2

BEGIN CONSTRUCTION
M 106+49.00

NOTES:

SEE QTAB ON SHEET CN2 FOR SOIL AMENDMENT QUANTITY INFORMATION

LEGEND

- EXISTING MINOR CONTOUR
- 10 EXISTING MAJOR CONTOUR
- NEW MINOR CONTOUR
- 10 NEW MAJOR CONTOUR
- NEW DITCH BOTTOM
- HVF HVF HIGH VISIBILTY FENCE
- COMPOST SOCKS
- COMPOST AMENDED VEGETATED FILTER STRIPS (CAVFS) - 12" TOPSOIL A - SEE SHEET DD6 FOR MORE INFORMATION
- COMPOST AMENDED BIOFILTRATION SWALE (CABS) - 8" TOPSOIL A - SEE SHEET DD5 FOR MORE INFORMATION
- SOIL AMENDMENT AREAS - SEE SHEETS LA1-LA5 AND SOIL PREPARATION DETAIL SHEET LD1 FOR MORE INFORMATION
- STORMWATER PRESETTLING POND BOTTOM AREA - 18" DEPTH COMPACTED TILL - SEE SHEET DD3 FOR MORE INFORMATION

0 50 100
SCALE IN FEET

FILE NAME	U:\PSO\Projects\Clients\1598-TulalipTribes\554-1598-095 116th-Ph4-PSE\99Svcs\CADD\DGN\PS&ESheets\BL1598033_PS_CN.dgn
TIME	11:43:01 AM
DATE	8/30/2017
PLOTTED BY	purgabut
DESIGNED BY	M. TSUN
ENTERED BY	B. PURGANAN
CHECKED BY	J. SWENSON
APPROVED BY	S. OLLING

REVISION	DATE	BY

REGION NO.	STATE	FED.AID PROJ.NO.
10	WASH	
JOB NUMBER		
CONTRACT NO.		LOCATION NO.

P.E. STAMP BOX — DATE

STATE OF WASHINGTON — JENS SWENSON — LANDSCAPE ARCHITECT — EXP. 10/3/2017

P.E. STAMP BOX — 8/31/17 DATE

TULALIP TRIBES — Parametrix

I-5 / 116TH STREET NE INTERCHANGE IMPROVEMENTS PHASE 4 RAMPS

GRADING SOIL AND PREPARATION PLAN

Plot 6

PLAN REF NO CN4

SHEET 104 OF 238 SHEETS

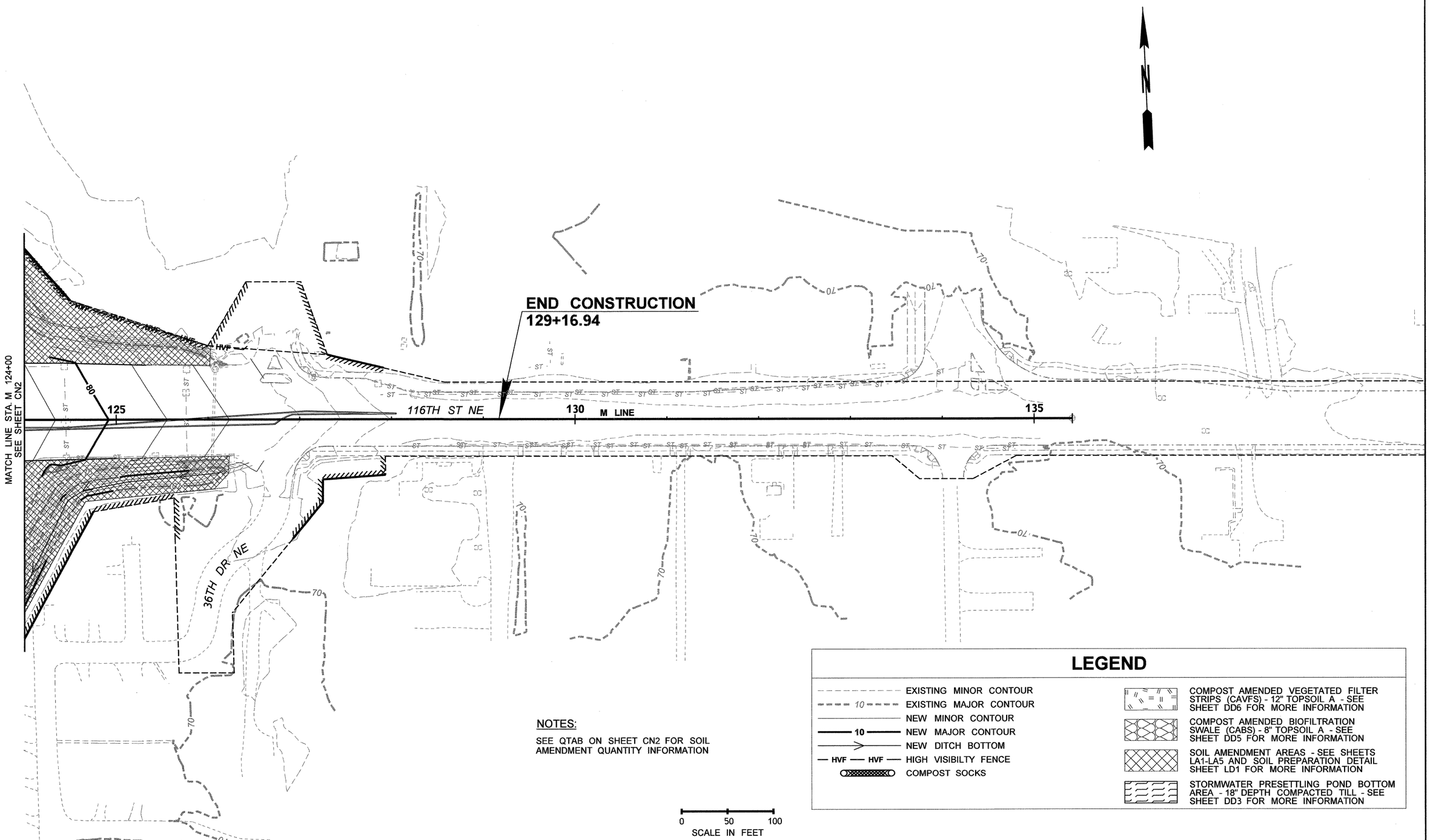

NOTES:

SEE QTAB ON SHEET CN2 FOR SOIL AMENDMENT QUANTITY INFORMATION

LEGEND

- EXISTING MINOR CONTOUR
- 10 EXISTING MAJOR CONTOUR
- NEW MINOR CONTOUR
- 10 NEW MAJOR CONTOUR
- NEW DITCH BOTTOM
- HVF HVF HIGH VISIBILTY FENCE
- COMPOST SOCKS
- COMPOST AMENDED VEGETATED FILTER STRIPS (CAVFS) - 12" TOPSOIL A - SEE SHEET DD6 FOR MORE INFORMATION
- COMPOST AMENDED BIOFILTRATION SWALE (CABS) - 8" TOPSOIL A - SEE SHEET DD5 FOR MORE INFORMATION
- SOIL AMENDMENT AREAS - SEE SHEETS LA1-LA5 AND SOIL PREPARATION DETAIL SHEET LD1 FOR MORE INFORMATION
- STORMWATER PRESETTLING POND BOTTOM AREA - 18" DEPTH COMPACTED TILL - SEE SHEET DD3 FOR MORE INFORMATION

FILE NAME	U:\PSO\Projects\Clients\1598-TulalipTribes\554-1598-095 116th-Ph4-PSE\99Svcs\CADD\DGN\PS&ESheets\BL1598033_PS_CN.dgn
TIME	11:43:54 AM
DATE	8/30/2017
PLOTTED BY	purgabut
DESIGNED BY	M. TSUN
ENTERED BY	B. PURGANAN
CHECKED BY	J. SWENSON
APPROVED BY	S. OLLING

REVISION	DATE	BY

REGION NO.	STATE	FED.AID PROJ.NO.
10	WASH	
JOB NUMBER		
CONTRACT NO.		LOCATION NO.

P.E. STAMP BOX — DATE

STATE OF WASHINGTON — JENS SWENSON — 38258 EXP. 10/31/2017 — LANDSCAPE ARCHITECT

P.E. STAMP BOX — 8/31/17 DATE

TULALIP TRIBES — Parametrix

I-5 / 116TH STREET NE INTERCHANGE IMPROVEMENTS PHASE 4 RAMPS

GRADING SOIL AND PREPARATION PLAN

Plot 7

PLAN REF NO CN5

SHEET 105 OF 238 SHEETS

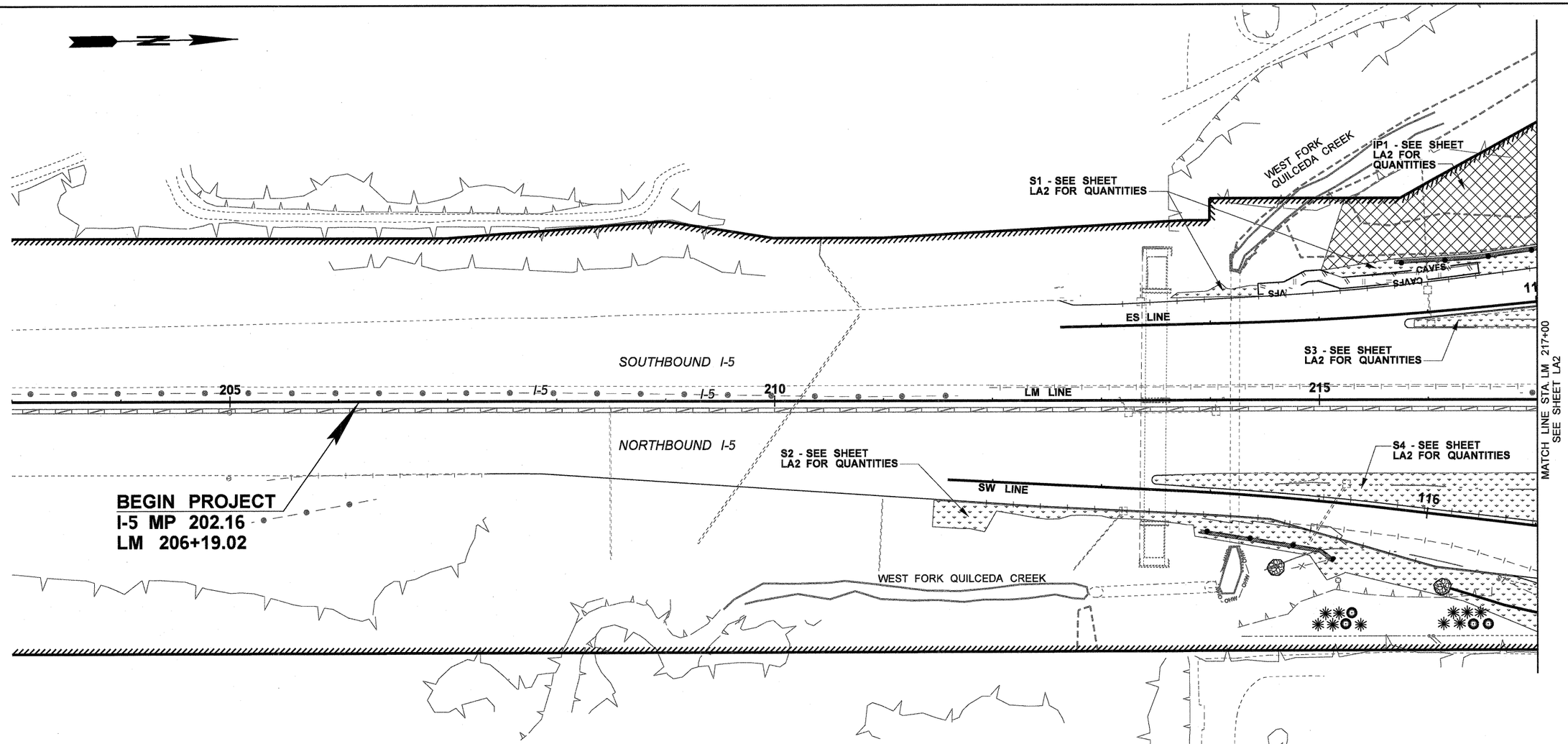

LEGEND:

- HVF — TREE PROTECTION (SEE PLANTING NOTES SHEET LD-1 FOR MORE INFORMATION)
- COMPOST AMENDED VEGETATED FILTER STRIPS (SEE STORMWATER DRAINAGE SHEETS FOR MORE INFORMATION)
- SEEDING, FERTILIZING, AND MULCHING
- INFILL PLANTING AREA
- SHRUB & TREE PLANTING AREA

NOTES:

1. SEE SHEETS LD1 AND LD2 FOR PLANT MATERIALS LIST, PLANTING NOTES AND DETAILS.
2. STAKE ALL TREE AND SHRUB LOCATIONS IN PLANTING AREAS FOR APPROVAL BY ENGINEER PRIOR TO PLANTING.
3. SHRUBS OF THE SAME SPECIES SHALL BE PLANTED IN GROUPS OF VARYING QUANTITY PER THE PLANT LIST. GROUPS SHALL BE IRREGULARLY SHAPED, LINEAR MASSES ROUGHLY PERPENDICULAR TO THE PLANT ZONE SLOPE THROUGHOUT EACH PLANTING ZONE.
4. LAYOUT AND STAKE TREE LOCATIONS IN FRONT OF NOISE WALL TO MINIMIZED BLOCKING VIEWS OF NOISE WALL ART FOR APPROVAL OF ENGINEER BEFORE PLANTING.

0 50 100
SCALE IN FEET

QUANTITY TAB - THIS SHEET ONLY

SYMBOL	ITEM	QUANTITY/AREA
SPACE TREES - 12' O.C. AS SHOWN		
✳	DOUGLAS FIR	10
✪	WESTERN RED CEDAR	4
FINE COMPOST (CY)		1.70
WOOD CHIP MULCH (ACRE)		0.004
WATERING BAGS (EA)		14

FILE NAME	U:\PSO\Projects\Clients\1598-TulalipTribes\554-1598-095 116th-Ph4-PSE\99Svcs\CADD\DGN\PS&ESheets\BL1598033_PS_LA.dgn
TIME	11:38:02 AM
DATE	8/25/2017
PLOTTED BY	purgabut
DESIGNED BY	J. SWENSON
ENTERED BY	B. PURGANAN
CHECKED BY	C. WARBER
APPROVED BY	S. OLLING

REVISION	DATE	BY

REGION NO.	STATE	FED.AID PROJ.NO.
10	WASH	
JOB NUMBER		
CONTRACT NO.		LOCATION NO.

DATE
P.E. STAMP BOX

STATE OF WASHINGTON JENS SWENSON 2858 EXP. 10/9/17 LANDSCAPE ARCHITECT
8/28/2017
DATE
P.E. STAMP BOX

TULALIP TRIBES
Parametrix

I-5 / 116TH STREET NE INTERCHANGE IMPROVEMENTS PHASE 4 RAMPS

LANDSCAPE PLAN

Plot 2
PLAN REF NO
LA1
SHEET 106 OF 238 SHEETS

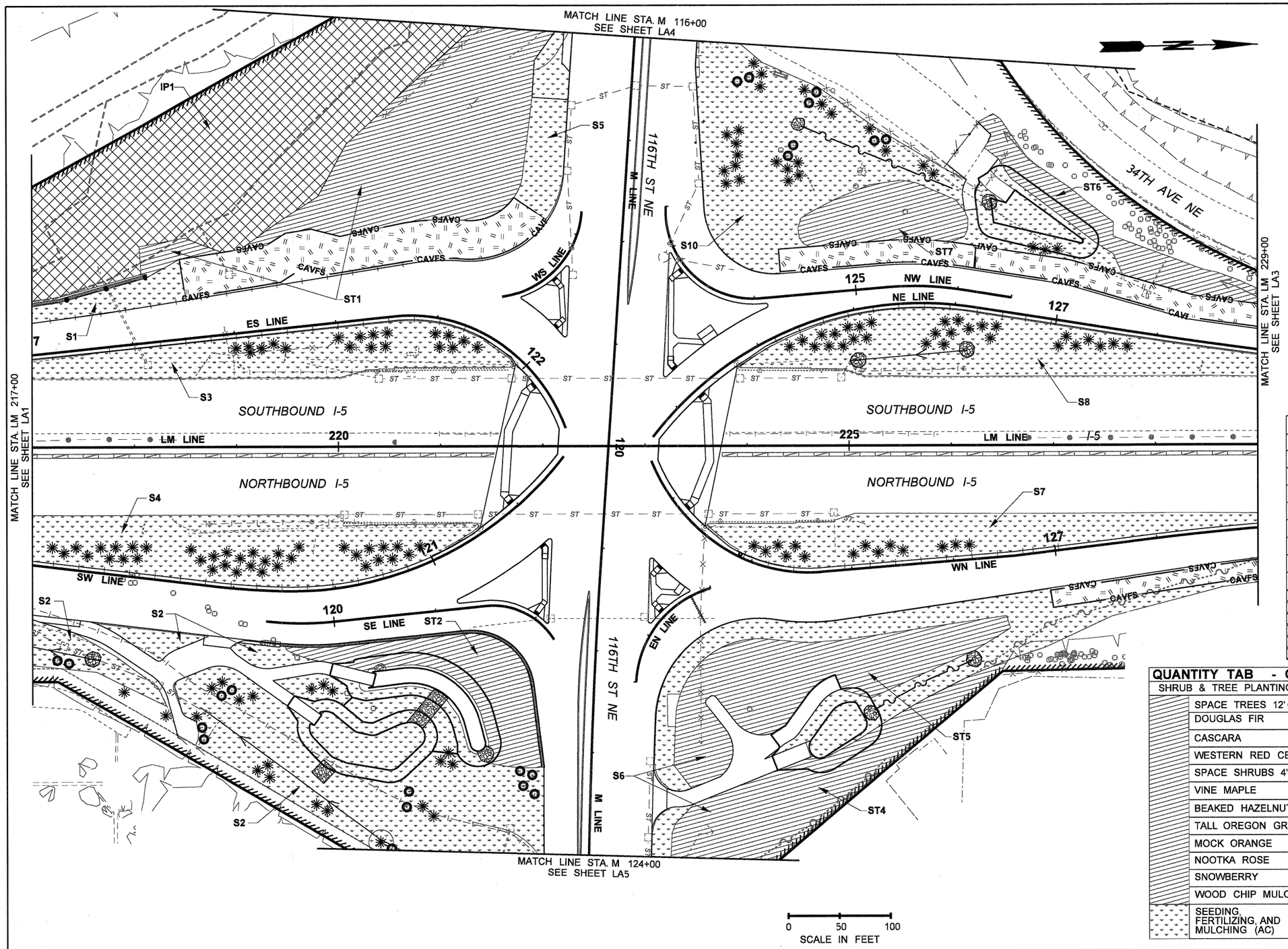

LEGEND:

- TREE PROTECTION (SEE PLANTING NOTES SHEET LD-1 FOR MORE INFORMATION)
- COMPOST AMENDED VEGETATED FILTER STRIPS (SEE STORMWATER DRAINAGE SHEETS FOR MORE INFORMATION)
- SEEDING, FERTILIZING, AND MULCHING
- INFILL PLANTING AREA
- SHRUB & TREE PLANTING AREA

NOTES:

1. SEE SHEETS LD1 AND LD2 FOR PLANT MATERIALS LIST, PLANTING NOTES AND DETAILS.
2. STAKE ALL TREE AND SHRUB LOCATIONS IN PLANTING AREAS FOR APPROVAL BY ENGINEER PRIOR TO PLANTING.
3. SHRUBS OF THE SAME SPECIES SHALL BE PLANTED IN GROUPS OF VARYING QUANTITY PER THE PLANT LIST. GROUPS SHALL BE IRREGULARLY SHAPED, LINEAR MASSES ROUGHLY PERPENDICULAR TO THE PLANT ZONE SLOPE THROUGHOUT EACH PLANTING ZONE.
4. LAYOUT AND STAKE TREE LOCATIONS IN FRONT OF NOISE WALL TO MINIMIZED BLOCKING VIEWS OF NOISE WALL ART FOR APPROVAL OF ENGINEER BEFORE PLANTING.

QUANTITY TAB

SYMBOL	ITEM	QUANTITY/AREA
SPACE TREES - 12' O.C. AS SHOWN		
	DOUGLAS FIR	146
	WESTERN RED CEDAR	21
FINE COMPOST (CY)		20.10
WOOD CHIP MULCH (ACRE)		0.05
WATERING BAGS (EA)		167
INFILL PLANTING AREA - SPACE 15' O.C.		IP1
	DOUGLAS FIR	84
	CASCARA	37
	WESTERN RED CEDAR	65
	WOOD CHIP MULCH (AC)	0.06

QUANTITY TAB - CONTINUED

SHRUB & TREE PLANTING AREA

SPACE TREES 12' O.C.	ST1	ST2	ST3	ST4	ST5	ST6	ST7
DOUGLAS FIR	127	39	6	89	73	32	28
CASCARA	57	17	2	40	33	14	13
WESTERN RED CEDAR	99	31	5	69	57	25	22
SPACE SHRUBS 4' O.C.							
VINE MAPLE	339	105	15	237	194	87	75
BEAKED HAZELNUT	339	105	15	237	194	67	75
TALL OREGON GRAPE	226	70	10	158	129	58	50
MOCK ORANGE	339	105	15	237	194	87	75
NOOTKA ROSE	339	105	15	237	194	87	75
SNOWBERRY	678	209	29	474	388	173	150
WOOD CHIP MULCH (AC)	0.81	0.25	0.04	0.57	0.46	0.21	0.18

SEEDING, FERTILIZING, AND MULCHING (AC)	S1	S2	S3	S4	S5	S6	S7	S8	S9	S10
	0.14	1.60	0.42	0.74	0.14	0.60	0.41	0.55	0.08	0.84

FILE NAME	U:\PSO\Projects\Clients\1598-TulalipTribes\554-1598-095 116th-Ph4-PSE\99Svcs\CADD\DGN\PS&ESheets\BL1598033_PS_LA.dgn
TIME	11:38:14 AM
DATE	8/25/2017
PLOTTED BY	purgabut
DESIGNED BY	J. SWENSON
ENTERED BY	B. PURGANAN
CHECKED BY	C. WARBER
APPROVED BY	S. OLLING

REVISION | DATE | BY

REGION NO. 10 | STATE WASH | FED.AID PROJ.NO.

JOB NUMBER

CONTRACT NO. | LOCATION NO.

DATE
P.E. STAMP BOX

STATE OF WASHINGTON
JENS SWENSON
LANDSCAPE ARCHITECT
8/28/2017
DATE
P.E. STAMP BOX

TULALIP TRIBES
Parametrix

I-5 / 116TH STREET NE INTERCHANGE IMPROVEMENTS PHASE 4 RAMPS

LANDSCAPE PLAN

PLAN REF NO LA2

SHEET 107 OF 238 SHEETS

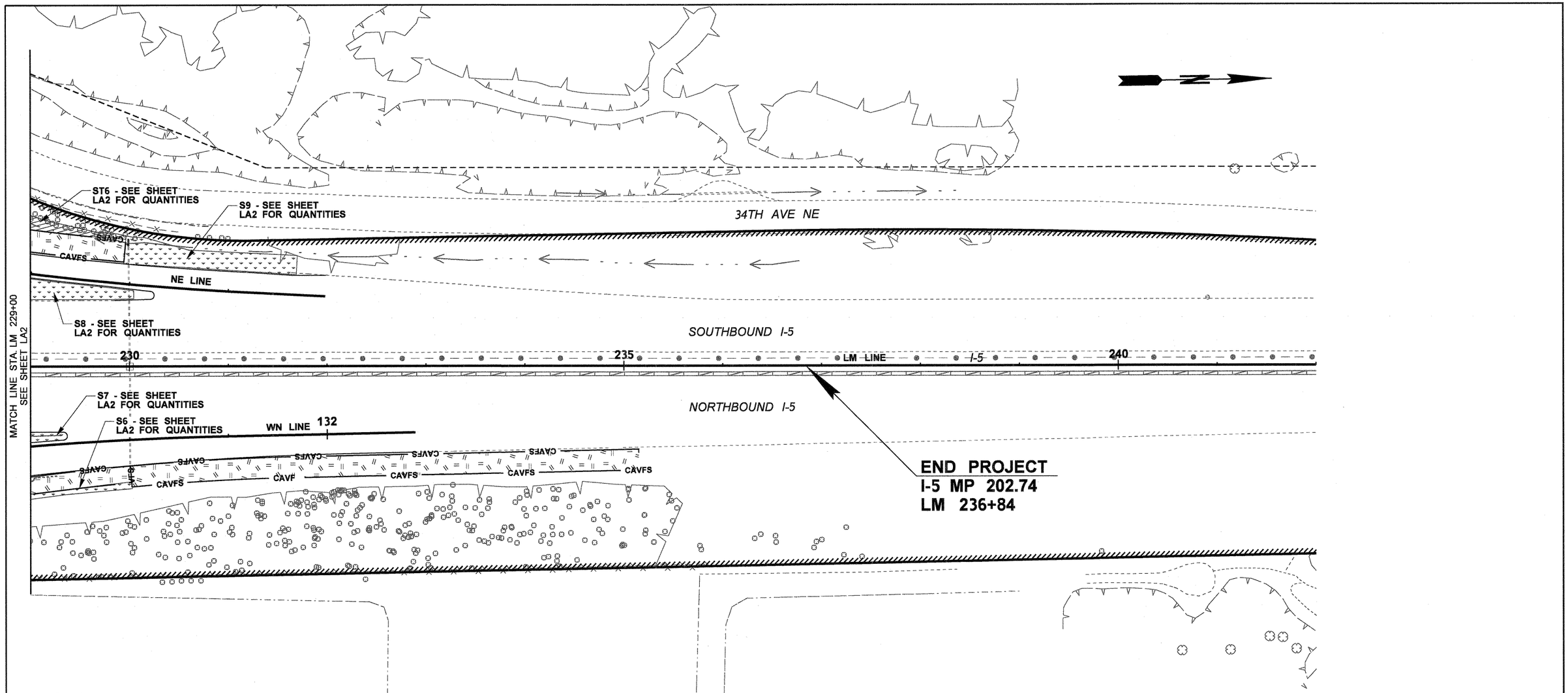

LEGEND:

- HVF — TREE PROTECTION (SEE PLANTING NOTES SHEET LD-1 FOR MORE INFORMATION)
- COMPOST AMENDED VEGETATED FILTER STRIPS (SEE STORMWATER DRAINAGE SHEETS FOR MORE INFORMATION)
- SEEDING, FERTILIZING, AND MULCHING
- INFILL PLANTING AREA
- SHRUB & TREE PLANTING AREA

NOTES:

1. SEE SHEETS LD1 AND LD2 FOR PLANT MATERIALS LIST, PLANTING NOTES AND DETAILS.
2. STAKE ALL TREE AND SHRUB LOCATIONS IN PLANTING AREAS FOR APPROVAL BY ENGINEER PRIOR TO PLANTING.
3. SHRUBS OF THE SAME SPECIES SHALL BE PLANTED IN GROUPS OF VARYING QUANTITY PER THE PLANT LIST. GROUPS SHALL BE IRREGULARLY SHAPED, LINEAR MASSES ROUGHLY PERPENDICULAR TO THE PLANT ZONE SLOPE THROUGHOUT EACH PLANTING ZONE.

0 50 100
SCALE IN FEET

FILE NAME	U:\PSO\Projects\Clients\1598-TulalipTribes\554-1598-095 116th-Ph4-PSE\99Svcs\CADD\DGN\PS&ESheets\BL1598033_PS_LA.dgn
TIME	11:38:35 AM
DATE	8/25/2017
PLOTTED BY	purgabut
DESIGNED BY	J. SWENSON
ENTERED BY	B. PURGANAN
CHECKED BY	C. WARBER
APPROVED BY	S. OLLING

REVISION	DATE	BY

REGION NO.	STATE	FED.AID PROJ.NO.
10	WASH	
JOB NUMBER		
CONTRACT NO.		LOCATION NO.

P.E. STAMP BOX — DATE

STATE OF WASHINGTON — JENS SWENSON — 35556 — EXP. 10/3/2017 — LANDSCAPE ARCHITECT
8/29/2017 DATE
P.E. STAMP BOX

TULALIP TRIBES — Parametrix

I-5 / 116TH STREET NE INTERCHANGE IMPROVEMENTS PHASE 4 RAMPS

LANDSCAPE PLAN

Plot 4
PLAN REF NO LA3
SHEET 108 OF 238 SHEETS

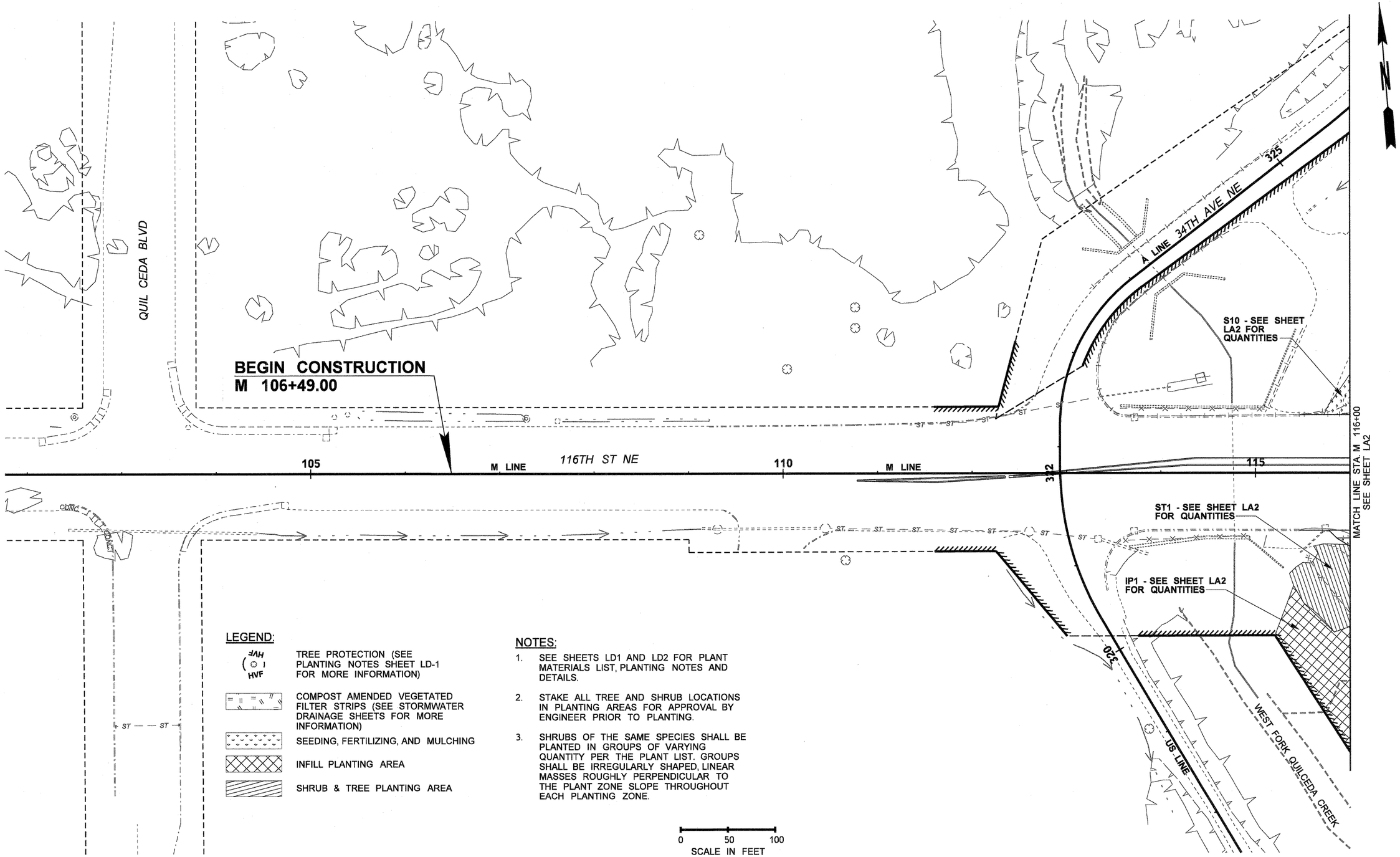

LEGEND:

- TREE PROTECTION (SEE PLANTING NOTES SHEET LD-1 FOR MORE INFORMATION)
- COMPOST AMENDED VEGETATED FILTER STRIPS (SEE STORMWATER DRAINAGE SHEETS FOR MORE INFORMATION)
- SEEDING, FERTILIZING, AND MULCHING
- INFILL PLANTING AREA
- SHRUB & TREE PLANTING AREA

NOTES:

1. SEE SHEETS LD1 AND LD2 FOR PLANT MATERIALS LIST, PLANTING NOTES AND DETAILS.
2. STAKE ALL TREE AND SHRUB LOCATIONS IN PLANTING AREAS FOR APPROVAL BY ENGINEER PRIOR TO PLANTING.
3. SHRUBS OF THE SAME SPECIES SHALL BE PLANTED IN GROUPS OF VARYING QUANTITY PER THE PLANT LIST. GROUPS SHALL BE IRREGULARLY SHAPED, LINEAR MASSES ROUGHLY PERPENDICULAR TO THE PLANT ZONE SLOPE THROUGHOUT EACH PLANTING ZONE.

0 50 100
SCALE IN FEET

FILE NAME	U:\PSO\Projects\Clients\1598-TulalipTribes\554-1598-095 116th-Ph4-PSE\99Svcs\CADD\DGN\PS&ESheets\BL1598033_PS_LA.dgn
TIME	11:38:48 AM
DATE	8/25/2017
PLOTTED BY	purgabut
DESIGNED BY	J. SWENSON
ENTERED BY	B. PURGANAN
CHECKED BY	C. WARBER
APPROVED BY	S. OLLING

REVISION	DATE	BY

REGION NO.	STATE	FED.AID PROJ.NO.
10	WASH	
JOB NUMBER		
CONTRACT NO.		LOCATION NO.

P.E. STAMP BOX — DATE

STATE OF WASHINGTON — JENS SWENSON — LANDSCAPE ARCHITECT — EXP. 10/31/2017
8/28/2017 DATE
P.E. STAMP BOX

TULALIP TRIBES — Parametrix

I-5 / 116TH STREET NE INTERCHANGE IMPROVEMENTS PHASE 4 RAMPS

LANDSCAPE PLAN

Plot 6
PLAN REF NO LA4
SHEET 109 OF 238 SHEETS

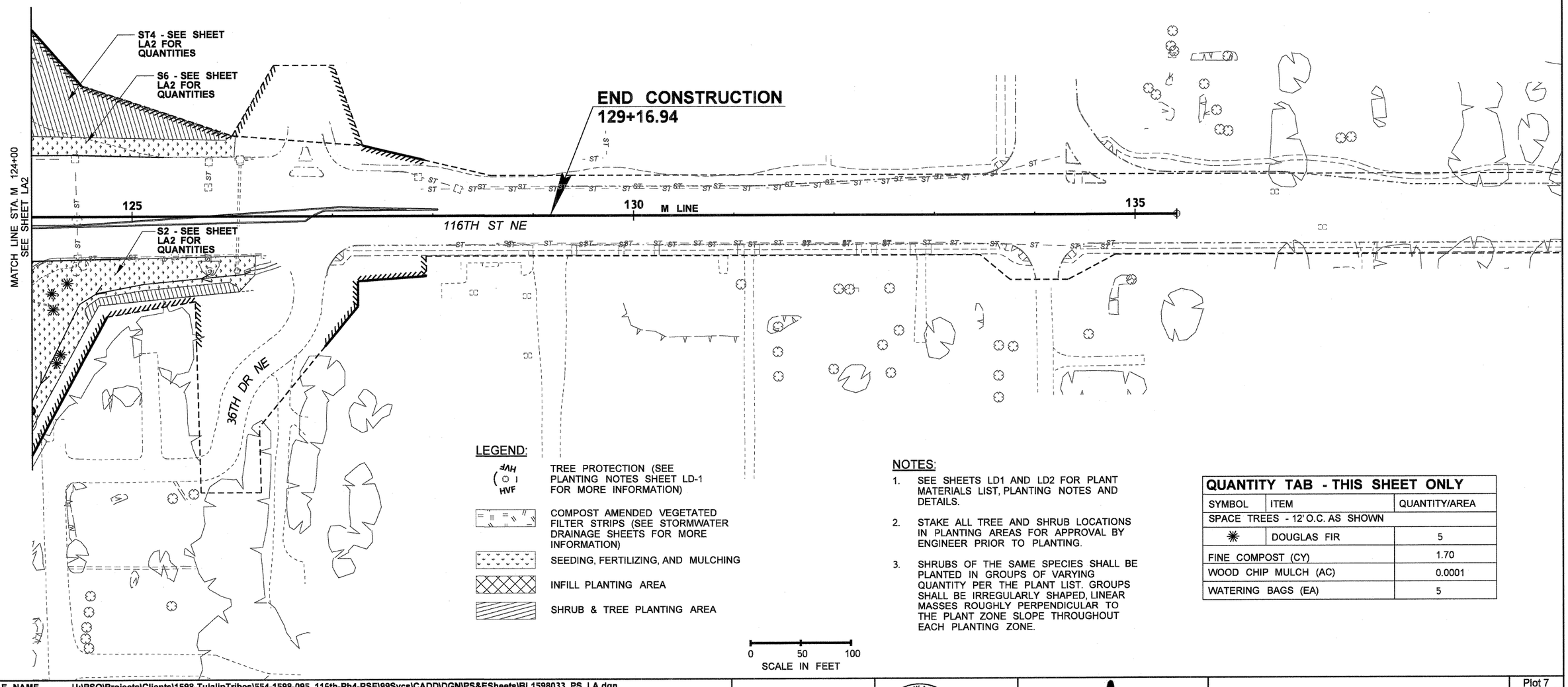

LEGEND:

- TREE PROTECTION (SEE PLANTING NOTES SHEET LD-1 FOR MORE INFORMATION)
- COMPOST AMENDED VEGETATED FILTER STRIPS (SEE STORMWATER DRAINAGE SHEETS FOR MORE INFORMATION)
- SEEDING, FERTILIZING, AND MULCHING
- INFILL PLANTING AREA
- SHRUB & TREE PLANTING AREA

NOTES:

1. SEE SHEETS LD1 AND LD2 FOR PLANT MATERIALS LIST, PLANTING NOTES AND DETAILS.
2. STAKE ALL TREE AND SHRUB LOCATIONS IN PLANTING AREAS FOR APPROVAL BY ENGINEER PRIOR TO PLANTING.
3. SHRUBS OF THE SAME SPECIES SHALL BE PLANTED IN GROUPS OF VARYING QUANTITY PER THE PLANT LIST. GROUPS SHALL BE IRREGULARLY SHAPED, LINEAR MASSES ROUGHLY PERPENDICULAR TO THE PLANT ZONE SLOPE THROUGHOUT EACH PLANTING ZONE.

QUANTITY TAB - THIS SHEET ONLY

SYMBOL	ITEM	QUANTITY/AREA
SPACE TREES - 12' O.C. AS SHOWN		
✳	DOUGLAS FIR	5
FINE COMPOST (CY)		1.70
WOOD CHIP MULCH (AC)		0.0001
WATERING BAGS (EA)		5

FILE NAME	U:\PSO\Projects\Clients\1598-TulalipTribes\554-1598-095 116th-Ph4-PSE\99Svcs\CADD\DGN\PS&ESheets\BL1598033_PS_LA.dgn
TIME	11:39:02 AM
DATE	8/25/2017
PLOTTED BY	purgabut
DESIGNED BY	J. SWENSON
ENTERED BY	B. PURGANAN
CHECKED BY	C. WARBER
APPROVED BY	S. OLLING

REVISION | DATE | BY

REGION NO. 10 | STATE WASH | FED.AID PROJ.NO.

JOB NUMBER

CONTRACT NO. | LOCATION NO.

P.E. STAMP BOX — DATE

STATE OF WASHINGTON — JENS SWENSON — 1858 — EXP. 10/3/2017 — LANDSCAPE ARCHITECT — 8/28/2017 DATE — P.E. STAMP BOX

TULALIP TRIBES — Parametrix

I-5 / 116TH STREET NE INTERCHANGE IMPROVEMENTS PHASE 4 RAMPS

LANDSCAPE PLAN

Plot 7

PLAN REF NO LA5

SHEET 110 OF 238 SHEETS

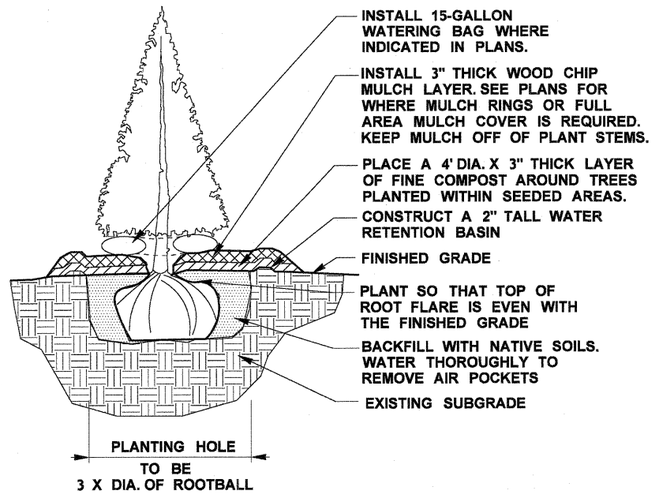

CONIFEROUS TREE PLANTING

DETAIL 1 / -

NOT TO SCALE

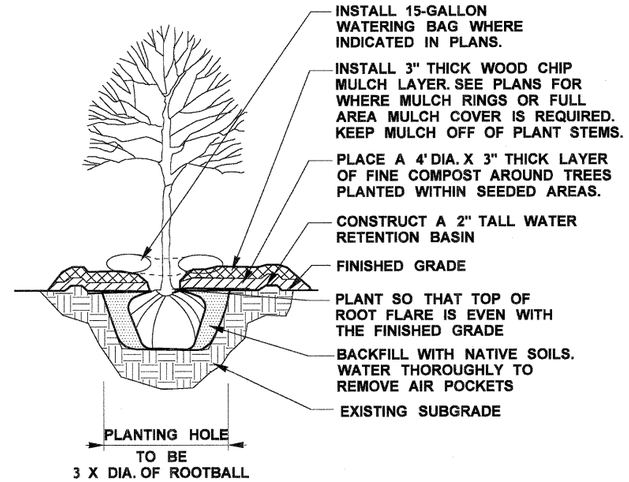

DECIDUOUS TREE PLANTING

DETAIL 2 / -

NOT TO SCALE

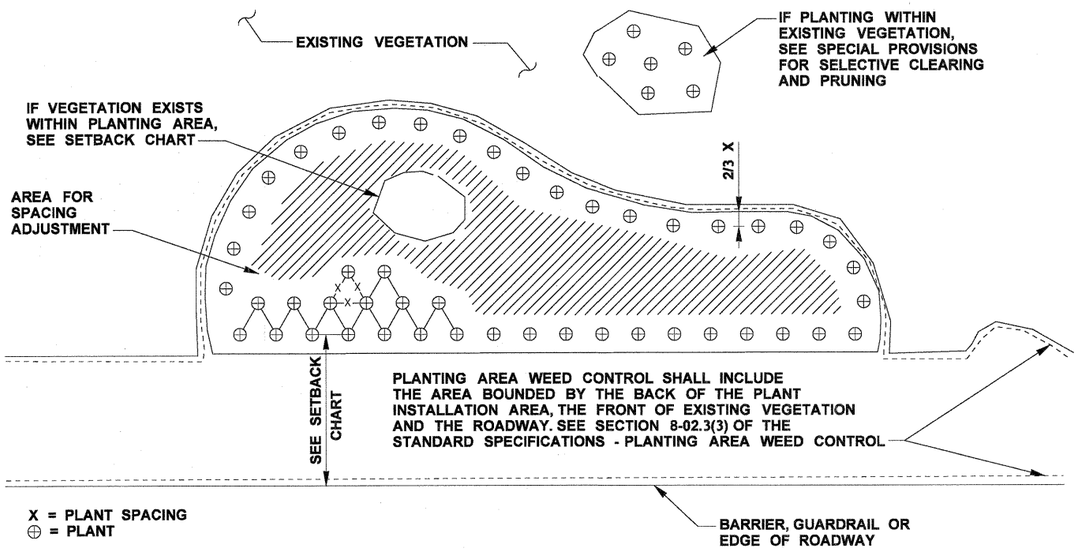

PLANTING AREA LAYOUT, SETBACK, AND WEED CONTROL

DETAIL 3 / -

NOT TO SCALE

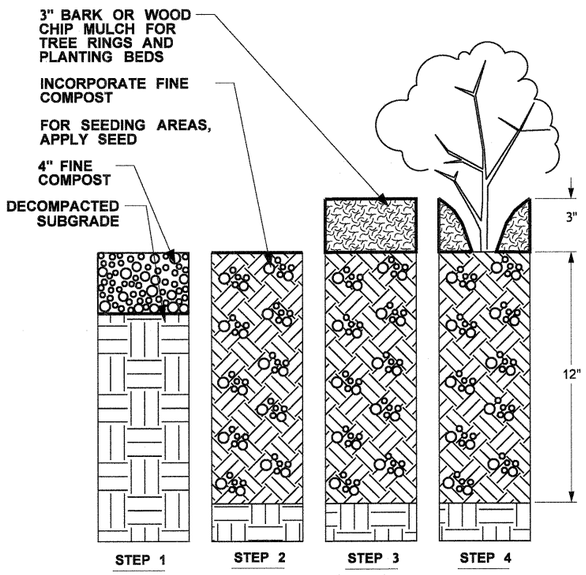

STEP 1 — PLANTING AREA PREPARATION (SEE SECTION 8-02.3(5) IN THE SPECIFICATIONS)

STEP 2 — PLACE 4" FINE COMPOST OVER DECOMPACTED SUBGRADE.

STEP 3 — INCORPORATE FINE COMPOST TO 12" DEPTH ACCORDING TO SECTION 8-02.3(6).

STEP 4 — IN PLANTING AREAS WITH WOODY PLANTS, INSTALL BARK OR WOOD CHIP MULCH 3" DEEP.

INSTALL PLANTS ACCORDING TO DETAIL THIS SHEET.

PLANTING AREA SOIL PREPARATION - SEQUENCE OF WORK

SECTION VIEW

NOT TO SCALE

DETAIL 4 / -

NOT TO SCALE

FILE NAME	U:\PSO\Projects\Clients\1598-TulalipTribes\554-1598-095 116th-Ph4-PSE\99Svcs\CADD\DGN\PS&ESheets\BL1598033_DE_LD.dgn
TIME	11:40:34 AM
DATE	8/25/2017
PLOTTED BY	purgabut
DESIGNED BY	J. SWENSON
ENTERED BY	B. PURGANAN
CHECKED BY	C. WARBER
APPROVED BY	S. OLLING

REVISION | DATE | BY

REGION NO. 10 | STATE WASH | FED.AID PROJ.NO.

JOB NUMBER

CONTRACT NO. | LOCATION NO.

P.E. STAMP BOX — DATE

STATE OF WASHINGTON — JENS SWENSON — 555 — EXP. 10/3/2017 — LANDSCAPE ARCHITECT

8/28/2017 DATE

P.E. STAMP BOX

TULALIP TRIBES — Parametrix

I-5 / 116TH STREET NE INTERCHANGE IMPROVEMENTS PHASE 4 RAMPS

LANDSCAPE DETAILS

Plot 1

PLAN REF NO LD1

SHEET 111 OF 238 SHEETS

PLANT MATERIAL LIST

QUANTITY	BOTANICAL NAME	COMMON NAME	MIN SIZE / CONDITION	NOTES/ SPACING
	Trees			
161	PSEUDOTSUGA MENZIESII	DOUGLAS FIR	#2 CONT/ 24" HT	AS SHOWN ON PLAN
25	THUJA PLICATA	WESTERN REDCEDAR	#2 CONT/ 24" HT	AS SHOWN ON PLAN
478	PSEUDOTSUGA MENZIESII	DOUGLAS FIR	#1 CONT / 16" HT	AS SHOWN ON PLAN
212	RHAMNUS PURSHIANA	CASCARA	#1 CONT / 16" HT	AS SHOWN ON PLAN
371	THUJA PLICATA	WESTERN REDCEDAR	#1 CONT / 30" HT	AS SHOWN ON PLAN
	Shrubs			
1,051	ACER CIRCINATUM	VINE MAPLE	#1 CONT / 12" HT	4' O.C. SPACING
1,051	CORYLUS CORNUTA	BEAKED HAZELNUT	#1 CONT / 12" HT	4' O.C. SPACING
701	MAHONIA AQUIFOLIUM	TALL OREGON GRAPE	#1 CONT / 12" HT	4' O.C. SPACING
1,051	PHILADELPHUS LEWISII	MOCK ORANGE	#1 CONT / 12" HT	4' O.C. SPACING
1,051	ROSA NUTKANA	NOOTKA ROSE	#1 CONT / 12" HT	4' O.C. SPACING
2,102	SYMPHORICARPOS ALBUS	SNOWBERRY	#1 CONT / 12" HT	4' O.C. SPACING

NOTES:
1. SEE PLANTING NOTES THIS SHEET AND DETAILS ON SHEET LD1.

PLANT MATERIAL SETBACK CHART

	GUARDRAIL BARRIER	EDGE OF ROADWAY OR PAVEMENT	DRAINAGE STRUCTURE OR ACCESS ROAD	WALL	FENCE, OVERHEAD UTILITIES, LIGHT POLES, UTILITY BOXES	SIGNS	EXISTING TREE TRUNK, VEGETATION MASS
EVERGREEN TREE	10'	20'	10'	10'	10'	15'	10'
ORNAMENTAL/ NATIVE DECIDUOUS TREE	10'	10'	10'	10'	10'	15'	10'
MEDIUM AND LARGE SHRUBS	5'	5'	5'	5'	3'	6'	5'

TYPICAL SETBACKS FOR CENTER OF PLANT MATERIAL UNLESS OTHERWISE DIRECTED BY THE ENGINEER DURING LAYOUT AND STAKING OF PLANT LOCATIONS. DISTANCE NOTED IS TO STEM OR TRUNK OF PLANT.
THIS CHART SUPPLEMENTS SECTION 8.02.3(7) OF THE STANDARD SPECIFICATIONS.

PLANTING NOTES:

1. CONTRACTOR SHALL ARRANGE TO MEET ON SITE WITH PROJECT REPRESENTATIVE TO DISCUSS LIMITS OF WORK AND METHODS. CONSTRUCTION ACTIVITIES SHALL NOT COMMENCE UNTIL ACCESS, LIMITS OF WORK, AND METHODS ARE APPROVED.
2. IF A CONFLICT OCCURS BETWEEN THE AMERICAN STANDARD FOR NURSERY STOCK AND THESE SPECIFICATIONS, THEN THESE SPECIFICATIONS SHALL APPLY.
3. ALL DIMENSIONS FOR LISTED HEIGHT, LENGTH AND CONTAINER SIZE ARE MINIMUM REQUIREMENTS. ALL PLANT MATERIALS SHALL BE NURSERY GROWN STOCK.
4. PLANTING PLANS REPRESENT A CONCEPTUAL PLANT LAYOUT. FINAL PLANT LOCATIONS SHALL BE APPROVED BY PROJECT ENGINEER PRIOR TO PLANTING.
5. PLANTS SHALL BE RANDOMLY MIXED THROUGHOUT THE INFILL PLANTING AREA AS APPROVED BY THE ENGINEER. PLANT SHRUBS IN A SINGLE SPECIES GROUPINGS OF 7 - 12 PLANTS EACH.
6. SEE PLANT SETBACK CHART FOR TREE AND SHRUB SETBACKS.
7. SAVE AND PROTECT EXISTING DESIRABLE VEGETATION PER SECTION 1-07.16(2) IN THE STANDARD SPECIFICATIONS. USE ONLY HAND TOOLS TO CLEAR AND CULTIVATE SOIL UNDER THE CANOPY (WITHIN AND 5' OUTSIDE THE DRIPLINE) OF EXISTING TREES.
8. CONTRACTOR SHALL REMOVE ALL STABILIZED CONSTRUCTION ENTRANCES, TEMPORARY ACCESS ROADS AND RESTORE OTHER TEMPORARILY DISTURBED AREAS AS DIRECTED BY PROJECT ENGINEER UPON COMPLETION OF WORK.

QUANTITY TABULATION - PAVING

NOTE:
THE FIRST NUMBER OF THE "CODE" BELOW REFERS TO THE SHEET NO. OR THE SHEET REFERENCE NO. SHOWING THE CONSTRUCTION FEATURE.

THE SECOND NUMBER REFERS TO THE CONSTRUCTION FEATURE FOUND ON THAT SHEET.

CODE	LOCATION ↓ \ UNIT OF MEASURE →	SEW TRAFFIC BARRIER	GEOSYNTHETIC WALL SINGLE SLOPE TRAFFIC BARRIER	BARRIER DELINEATOR	CEMENT CONC. TRAFFIC CURB AND GUTTER	CEMENT CONC. TRAFFIC CURB		EXTRUDED CURB	BEAM GUARDRAIL TYPE 31 NON-FLARED TERMINAL	BEAM GUARDRAIL TYPE 31	BEAM GUARDRAIL TRANSITION SECTION TYPE 21	BEAM GUARDRAIL ANCHOR TYPE 10		PRECAST SLOPED MOUNTABLE CURB				SEE GENERAL NOTES
		L.F.	L.F.	EACH	L.F.	L.F.		L.F.	EACH	L.F.	EACH	EACH		L.F.				
PV1-1	ES 113+14.9 (20.0' LT) TO ES 120+28.8 (46.9' LT)									713								3,5
PV1-2	SW 113+92.6 (35.0' RT) TO SW 115+19.9 (52.4' RT)																	
PV1-3	NOT USED																	
PV1-4	SW 111+89.8 (19.1' RT)								1									4
PV1-5	SW 115+00.7 (4.0' LT)																	4
PV1-6	SW 115+50.6 (4.0' LT) TO SW 121+56.5 (6.0' LT)									562.5								3
PV1-7	SW 112+39.7 (20.0' RT) TO SW 116+14.0 (48.0' RT)									325								3
PV1-8	ES 114+45.2 (32.1' LT) TO ES 116+49.8 (43.0' LT)																	
PV1-9	SW 113+90.8 (6.0' LT) TO SW 115+50.5 (6.0' LT)																	
PV1-10	SW 116+13.5 (50.0' RT)																	
PV1-11	SW 116+85.0 (50.0' RT)																	
PV1-12	LM 207+84.5 (68.0' RT) TO SW 113+62.0 (22.0' RT)																	
PV1-13	WN 123+42.3 (6.0' LT) TO WN 123+83.4 (4.0' LT)																	
PV1-14	ES 115+82.0 (2.0' RT)																	
PV1-15	ES 116+80.5 (29.0' LT) TO ES 120+74.4 (51'.0 LT)																	
PV1-16	ES 113+15.6 (20' LT)											1						
PV1-17	SW 116+84.4 (48.0' RT)											1						5
PV1-18	SW 115+76.84 (6.0' LT) TO SW 116+88.96 (6.0' LT)																	10,11
PV2-1	ES 122+18.0 (6.0' RT)																	
PV2-2	ES 121+88.0 (53.9' LT)																	
PV2-3	WS 121+99.0 (7.7' RT)																	
PV2-4	NE 126+73.5 (38.0' LT) TO NE 127+73.5 (29.0' LT)																	
PV2-5	ES 117+73.4 (4.0' RT) TO ES 121+50.8 (4.0' RT)									375								3
PV2-6	NW 123+23.3 (7.2' RT)																	
PV2-7	NE 123+25.6 (28.1' LT)																	
PV2-8	NE 123+25.8 (8.5' RT)																	
PV2-9	ES 117+73.4 (4.0' RT)											1						5
PV2-10	SW 121+56.7 (7.5' LT)			1														10, 11
PV2-11	WN 123+81.88 (5.9' LT) TO WN 127+04.28 (5.9' LT)			1														10, 11
PV2-12	NE 124+12.7 (4.0' RT) TO NE 126+65.2 (4.0' RT)									250								3
PV2-13	NE 127+15.2 (4.0' RT)								1									4
PV2-14	NE 124+12.7 (4.0' RT)										1							6, 14
PV2-15	NE 125+94.1 (160.0' LT)																	
PV2-16	NW 125+70.8 (121.9' LT) TO NW 125+98.8 (166.6' LT)																	
PV2-17	SW 121+91.3 (8.5' LT)																	
	SHEET TOTAL	0	0	2	0	0		0	2	2225.5	1	3		0				

GENERAL NOTES:

1. SEE WALL DETAILS (WD SHEETS), SEW TRAFFIC BARRIER.
2. SEE STANDARD PLAN L-20.10-03, COATED CHAIN LINK FENCE, TYPE 4
3. SEE STANDARD PLAN C-20.14-03, BEAM GUARDRAIL TYPE 31: PLACEMENT
4. SEE STANDARD PLAN C-22.40-05, BEAM GUARDRAIL TYPE 31: NON-FLARED TERMINAL
5. SEE STANDARD PLAN C-23.60-03, BEAM GUARDRAIL (TYPE 31) ANCHOR TYPE 10
6. SEE STANDARD PLAN C-25.20-06, BEAM GUARDRAIL (TYPE 31) TRANSITION SECTION TYPE 21
7. SEE STANDARD PLAN F-40.15-03, CURB RAMP (TYPE PERPENDICULAR A)
8. SEE STANDARD PLAN F-10.62-02, PRECAST SLOPED MOUNTABLE CURB
9. SEE STANDARD PLAN F-10.12-03, CEMENT CONCRETE CURBS
10. SEE STANDARD PLAN M-40.10-03, GUIDE POST AND BARRIER DELINEATORS, SIDE MOUNT FOR BARRIER DELINEATORS OR GUARDRAIL MOUNT ON STEEL GUARDRAIL POST
11. SEE STANDARD PLAN M-40.20-00, GUIDE POST PLACEMENT INTERCHANGES
12. SEE WSDOT HIGHWAY RUNOFF BMP HR-1 (APR. 2014).
13. SEE WSDOT HIGHWAY RUNOFF BMP HR-2 (APR. 2014).
14. SEE STANDARD PLAN C-24.10-01, GUARDRAIL CONNECTION TO BRIDGE TRAFFIC BARRIER (D CONNECTION).
15. SEE STANDARD PLAN F-10.64-03, PRECAST DUAL FACED SLOPED MOUNTABLE CURB
16. SEE STANDARD PLAN L-30.10-02, COATED CHAIN LINK GATE, DOUBLE 20'
17. SEE STANDARD PLAN F-10.24-00, EXTRUDED CURB
18. SEE PD6 SHEET, CEMENT CONC. CURB RAMP TYPE SINGLE DIRECTION MODIFIED
19. SEE SPECIAL PROVISIONS
20. SEE WD SHEETS, CABLE FENCE DETAIL
21. SEE TB SHEETS, GEOSYNTHETIC WALL SINGLE SLOPE TRAFFIC BARRIER
22. SEE WSDOT DM 1620.04(1) (JULY 2014), PERMANENT IMPACT ATTENUATOR

DESIGNED BY	M. TSUN					REGION NO.	STATE
ENTERED BY	C. SHARMA					10	WASH
CHECKED BY	D. PROCTOR					JOB NUMBER	
APPROVED BY	H. LONGFELLOW					CONTRACT NO.	
		DATE	DATE	REVISION	BY		

FED. AID PROJ. NO.

TULALIP TRIBES ©
Parametrix

I-5 / 116TH STREET NE
INTERCHANGE IMPROVEMENTS
PHASE 4 RAMPS

QUANTITY TABULATION - PAVING

QTPV1

SHEET 113 OF 238 SHEETS

QUANTITY TABULATION - PAVING

NOTE:
THE FIRST NUMBER OF THE "CODE" BELOW REFERS TO THE SHEET NO. OR THE SHEET REFERENCE NO. SHOWING THE CONSTRUCTION FEATURE.

THE SECOND NUMBER REFERS TO THE CONSTRUCTION FEATURE FOUND ON THAT SHEET.

CODE	LOCATION ⤵ \ UNIT OF MEASURE ➢	PRECAST DUAL FACED SLOPED MOUNTABLE CURB	CONC. CLASS 4000 FOR TRAFFIC ISLAND	PERMENANT IMPACT ATTENUATOR	FLEXIBLE GUIDE POST	CEMENT CONC. CURB RAMP TYPE A		CABLE FENCE	COATED CHAIN LINK FENCE TYPE 4	COATED END, GATE, CORNER, PULLPOST FOR CHAIN LINK FENCE	DOUBLE 20 FT. COATED CHAIN LINK GATE	LEAN CONCRETE		CEMENT CONC. CURB RAMP TYPE SINGLE DIRECTION MODIFIED	TEXTURED CEMENT CONCRETE PAVEMENT CLASS 4000 FOR TRAFFIC ISLAND			SEE GENERAL NOTES
		L.F.	C.Y.	EACH	EACH	EACH		L.F.	L.F.	EACH	EACH	C.Y.		EACH	C.Y.			
PV1-1	ES 113+14.9 (20.0' LT) TO ES 120+28.8 (46.9' LT)																	
PV1-2	SW 113+92.6 (35.0' RT) TO SW 115+19.9 (52.4' RT)							128										20
PV1-3	NOT USED																	
PV1-4	SW 111+89.8 (19.1' RT)																	
PV1-5	SW 115+00.7 (4.0' LT)			1														22
PV1-6	SW 115+50.6 (4.0' LT) TO SW 121+56.5 (6.0' LT)																	
PV1-7	SW 112+39.7 (20.0' RT) TO SW 116+14.0 (48.0' RT)																	
PV1-8	ES 114+45.2 (32.1' LT) TO ES 116+49.8 (43.0' LT)				2													10, 12
PV1-9	SW 113+90.8 (6.0' LT) TO SW 115+50.5 (6.0' LT)				2													10, 11
PV1-10	SW 116+13.5 (50.0' RT)				1													10, 11
PV1-11	SW 116+85.0 (50.0' RT)				1													10, 13
PV1-12	LM 207+84.5 (68.0' RT) TO SW 113+62.0 (22.0' RT)				7													10, 11
PV1-13	WN 123+42.3 (6.0' LT) TO WN 123+83.4 (4.0' LT)				6													10, 11
PV1-14	ES 115+82.0 (2.0' RT)				1													10, 11
PV1-15	ES 116+80.5 (29.0' LT) TO ES 120+74.4 (51'.0 LT)				5													10, 11
PV1-16	ES 113+15.6 (20' LT)																	
PV1-17	SW 116+84.4 (48.0' RT)																	
PV1-18	SW 115+76.84 (6.0' LT) TO SW 116+88.96 (6.0' LT)				4													10,11
PV2-1	ES 122+18.0 (6.0' RT)					1												7
PV2-2	ES 121+88.0 (53.9' LT)					1												7
PV2-3	WS 121+99.0 (7.7' RT)					1												7
PV2-4	NE 126+73.5 (38.0' LT) TO NE 127+73.5 (29.0' LT)				2													10, 11
PV2-5	ES 117+73.4 (4.0' RT) TO ES 121+50.8 (4.0' RT)																	
PV2-6	NW 123+23.3 (7.2' RT)					1												7
PV2-7	NE 123+25.6 (28.1' LT)													1				18
PV2-8	NE 123+25.8 (8.5' RT)					1												7
PV2-9	ES 117+73.4 (4.0' RT)																	
PV2-10	SW 121+56.7 (7.5' LT)																	
PV2-11	WN 123+81.88 (5.9' LT) TO WN 127+04.28 (5.9' LT)				8													10, 11
PV2-12	NE 124+12.7 (4.0' RT) TO NE 126+65.2 (4.0' RT)																	
PV2-13	NE 127+15.2 (4.0' RT)																	
PV2-14	NE 124+12.7 (4.0' RT)																	
PV2-15	NE 125+94.1 (160.0' LT)										1							16
PV2-16	NW 125+70.8 (121.9' LT) TO NW 125+98.8 (166.6' LT)								40	4								2
PV2-17	SW 121+91.3 (8.5' LT)					1												7
	SHEET TOTAL	0	0	1	39	6		128	40	4	1	0		1	0			

GENERAL NOTES:

1. SEE WALL DETAILS (WD SHEETS), SEW TRAFFIC BARRIER.
2. SEE STANDARD PLAN L-20.10-03, COATED CHAIN LINK FENCE, TYPE 4
3. SEE STANDARD PLAN C-20.14-03, BEAM GUARDRAIL TYPE 31: PLACEMENT
4. SEE STANDARD PLAN C-22.40-05, BEAM GUARDRAIL TYPE 31: NON-FLARED TERMINAL
5. SEE STANDARD PLAN C-23.60-03, BEAM GUARDRAIL (TYPE 31) ANCHOR TYPE 10
6. SEE STANDARD PLAN C-25.20-06, BEAM GUARDRAIL (TYPE 31) TRANSITION SECTION TYPE 21
7. SEE STANDARD PLAN F-40.15-03, CURB RAMP (TYPE PERPENDICULAR A)
8. SEE STANDARD PLAN F-10.62-02, PRECAST SLOPED MOUNTABLE CURB
9. SEE STANDARD PLAN F-10.12-03, CEMENT CONCRETE CURBS
10. SEE STANDARD PLAN M-40.10-03, GUIDE POST AND BARRIER DELINEATORS, SIDE MOUNT FOR BARRIER DELINEATORS OR GUARDRAIL MOUNT ON STEEL GUARDRAIL POST
11. SEE STANDARD PLAN M-40.20-00, GUIDE POST PLACEMENT INTERCHANGES
12. SEE WSDOT HIGHWAY RUNOFF BMP HR-1 (APR. 2014).
13. SEE WSDOT HIGHWAY RUNOFF BMP HR-2 (APR. 2014).
14. SEE STANDARD PLAN C-24.10-01, GUARDRAIL CONNECTION TO BRIDGE TRAFFIC BARRIER (D CONNECTION).
15. SEE STANDARD PLAN F-10.64-03, PRECAST DUAL FACED SLOPED MOUNTABLE CURB
16. SEE STANDARD PLAN L-30.10-02, COATED CHAIN LINK GATE, DOUBLE 20'
17. SEE STANDARD PLAN F-10.24-00, EXTRUDED CURB
18. SEE PD6 SHEET, CEMENT CONC. CURB RAMP TYPE SINGLE DIRECTION MODIFIED
19. SEE SPECIAL PROVISIONS
20. SEE WD SHEETS, CABLE FENCE DETAIL
21. SEE TB SHEETS, GEOSYNTHETIC WALL SINGLE SLOPE TRAFFIC BARRIER
22. SEE WSDOT DM 1620.04(1) (JULY 2014), PERMANENT IMPACT ATTENUATOR

DESIGNED BY	M. TSUN				
ENTERED BY	C. SHARMA				
CHECKED BY	D. PROCTOR				
APPROVED BY	H. LONGFELLOW				
		DATE	DATE	REVISION	BY

REGION NO.	STATE	FED. AID PROJ. NO.
10	WASH	
JOB NUMBER		
CONTRACT NO.		

TULALIP TRIBES
Parametrix

I-5 / 116TH STREET NE
INTERCHANGE IMPROVEMENTS
PHASE 4 RAMPS

QUANTITY TABULATION - PAVING

QTPV2

SHEET 114 OF 238 SHEETS

QUANTITY TABULATION - PAVING

NOTE:
THE FIRST NUMBER OF THE "CODE" BELOW REFERS TO THE SHEET NO. OR THE SHEET REFERENCE NO. SHOWING THE CONSTRUCTION FEATURE.

THE SECOND NUMBER REFERS TO THE CONSTRUCTION FEATURE FOUND ON THAT SHEET.

CODE	LOCATION ⤵ \ UNIT OF MEASURE ➢	SEW TRAFFIC BARRIER	GEOSYNTHETIC WALL SINGLE SLOPE TRAFFIC BARRIER	BARRIER DELINEATOR	CEMENT CONC. TRAFFIC CURB AND GUTTER	CEMENT CONC. TRAFFIC CURB		EXTRUDED CURB	BEAM GUARDRAIL TYPE 31 NON-FLARED TERMINAL	BEAM GUARDRAIL TYPE 31	BEAM GUARDRAIL TRANSITION SECTION TYPE 21	BEAM GUARDRAIL ANCHOR TYPE 10		PRECAST SLOPED MOUNTABLE CURB				SEE GENERAL NOTES
		L.F.	L.F.	EACH	L.F.	L.F.		L.F.	EACH	L.F.	EACH	EACH		L.F.				
PV2-18	SW 121+91.4 (43.1' RT)																	
PV2-19	SE 121+98.7 (7.2' LT)																	
PV2-20	SW 119+48.0 (50.1' RT) TO M 123+15.7 (47.1' RT)	356																1
PV2-21	M 123+15.5 (46.1' RT) TO M 125+00.0 (41.5' RT)				185													9
PV2-22	M 123+10.5 (61.0' LT) TO WN 126+88.9 (35.5' RT)				488													9
PV2-23	EN 123+25.6 (7.7' LT)																	
PV2-24	WN 123+35.9 (51.1' RT)																	
PV2-25	WN 123+17.3 (8.5' LT)																	
PV2-26	ES 115+73.6 (47.3' LT) TO ES 118+20.2 (63.4' LT)																	
PV2-27	ES 120+63.3 (49.2 LT)								1									4
PV2-28	WN 123+43.7 (6.0' LT) TO WN 126+73.4 (4.0' LT)									287.5								3
PV2-29	WN 127+88.2 (6.0' LT)																	
PV2-30	WN 123+42.3 (6.0' LT) TO WN 123+83.4 (4.0' LT)													1324				8
PV2-31	ES 121+44.4 (4.0' RT) TO ES 121+50.8 (4.0' RT)							6										17
PV2-32	M 119+26.2 (95.0' RT) TO M 120+86.5 (120.0' RT)																	
PV2-33	M 119+12.90 (121.2' LT) TO M 120.72.36 (99.6' LT)																	
PV2-34	M 123+76.27 (61.5' LT) TO M 125+32.29 (58.8' LT)				156													9
PV2-35	M 118+27.1 (50.9' RT) TO M 118+96.0 (48.6' RT)					186												9
PV2-36	M 118+07.54 (48.1' LT) TO M 119+28.0 (50.6' LT)					363												9
PV2-37	M 120+94.0 (50.6' RT) TO M 121+76.09 (48.2' RT)					291												9
PV2-38	M 121+05.0 (48.5' LT) TO M 121+69.98 (51.2' LT)					167												9
PV2-39	ES 118+54.1 (79.3' LT) TO M 117+61.5 (108.4' LT)																	
PV2-40	NW 124+28.0 (46' LT)																	
PV2-41	WN 123+83.6 (4.0' LT) TO WN 124+34.9 (4.0' LT)							49										17
PV2-42	NE 124+12.7 (4.0' RT) TO NE 124+24.0 (4.0' RT)							11										17
PV2-43	ES 121+50.8 (4.0' RT) TO ES 121+91.7 (8.4' RT)		41.5															21
PV2-44	SW 121+00.0 (5.0' RT) TO SW 121+15.4 (4.0' RT)							15										17
PV2-45	WN 123+42.31 (7.5' LT)			1														10,11
PV2-46	WN 125+93.0 (43' RT) TO WN 126+93.0 (38' RT)																	
PV2-47	M 122+63.94 (63' LT) TO WN 124+61.02 (50.21' RT)																	
PV2-48	NE 128+20.5 (5.5' RT)																	
PV2-49	NE 123+72.4 (7.5' RT)			1														10, 11
PV2-50	NW 122+59.0 (40' LT) TO NW 125+74.5 (23.0' LT)																	
PV2-51	SW 117+28.96 (5.9' LT) TO SW 121+29.20 (6.5' LT)			1														
	SHEET TOTAL	356	41.5	3	829	1007		81	1	287.5	0	0		1324				

GENERAL NOTES:

1. SEE WALL DETAILS (WD SHEETS), SEW TRAFFIC BARRIER.
2. SEE STANDARD PLAN L-20.10-03, COATED CHAIN LINK FENCE, TYPE 4
3. SEE STANDARD PLAN C-20.14-03, BEAM GUARDRAIL TYPE 31: PLACEMENT
4. SEE STANDARD PLAN C-22.40-05, BEAM GUARDRAIL TYPE 31: NON-FLARED TERMINAL
5. SEE STANDARD PLAN C-23.60-03, BEAM GUARDRAIL (TYPE 31) ANCHOR TYPE 10
6. SEE STANDARD PLAN C-25.20-06, BEAM GUARDRAIL (TYPE 31) TRANSITION SECTION TYPE 21
7. SEE STANDARD PLAN F-40.15-03, CURB RAMP (TYPE PERPENDICULAR A)
8. SEE STANDARD PLAN F-10.62-02, PRECAST SLOPED MOUNTABLE CURB
9. SEE STANDARD PLAN F-10.12-03, CEMENT CONCRETE CURBS
10. SEE STANDARD PLAN M-40.10-03, GUIDE POST AND BARRIER DELINEATORS, SIDE MOUNT FOR BARRIER DELINEATORS OR GUARDRAIL MOUNT ON STEEL GUARDRAIL POST
11. SEE STANDARD PLAN M-40.20-00, GUIDE POST PLACEMENT INTERCHANGES
12. SEE WSDOT HIGHWAY RUNOFF BMP HR-1 (APR. 2014).
13. SEE WSDOT HIGHWAY RUNOFF BMP HR-2 (APR. 2014).
14. SEE STANDARD PLAN C-24.10-01, GUARDRAIL CONNECTION TO BRIDGE TRAFFIC BARRIER (D CONNECTION).
15. SEE STANDARD PLAN F-10.64-03, PRECAST DUAL FACED SLOPED MOUNTABLE CURB
16. SEE STANDARD PLAN L-30.10-02, COATED CHAIN LINK GATE, DOUBLE 20'
17. SEE STANDARD PLAN F-10.24-00, EXTRUDED CURB
18. SEE PD6 SHEET, CEMENT CONC. CURB RAMP TYPE SINGLE DIRECTION MODIFIED
19. SEE SPECIAL PROVISIONS
20. SEE WD SHEETS, CABLE FENCE DETAIL
21. SEE TB SHEETS, GEOSYNTHETIC WALL SINGLE SLOPE TRAFFIC BARRIER
22. SEE WSDOT DM 1620.04(1) (JULY 2014), PERMANENT IMPACT ATTENUATOR

DESIGNED BY	M. TSUN				
ENTERED BY	C. SHARMA				
CHECKED BY	D. PROCTOR				
APPROVED BY	H. LONGFELLOW				
		DATE	DATE	REVISION	BY

REGION NO.	STATE	FED. AID PROJ. NO.
10	WASH	
JOB NUMBER		
CONTRACT NO.		

TULALIP TRIBES
Parametrix

I-5 / 116TH STREET NE
INTERCHANGE IMPROVEMENTS
PHASE 4 RAMPS

QUANTITY TABULATION - PAVING

QTPV3

QUANTITY TABULATION - PAVING

NOTE:
THE FIRST NUMBER OF THE "CODE" BELOW REFERS TO THE SHEET NO. OR THE SHEET REFERENCE NO. SHOWING THE CONSTRUCTION FEATURE.

THE SECOND NUMBER REFERS TO THE CONSTRUCTION FEATURE FOUND ON THAT SHEET.

CODE	LOCATION ⤵ \ UNIT OF MEASURE ➢	PRECAST DUAL FACED SLOPED MOUNTABLE CURB	CONC. CLASS 4000 FOR TRAFFIC ISLAND	PERMENANT IMPACT ATTENUATOR	FLEXIBLE GUIDE POST	CEMENT CONC. CURB RAMP TYPE A		CABLE FENCE	COATED CHAIN LINK FENCE TYPE 4	COATED END, GATE, CORNER, PULLPOST FOR CHAIN LINK FENCE	DOUBLE 20 FT. COATED CHAIN LINK GATE	LEAN CONCRETE		CEMENT CONC. CURB RAMP TYPE SINGLE DIRECTION MODIFIED	TEXTURED CEMENT CONCRETE PAVEMENT CLASS 4000 FOR TRAFFIC ISLAND			SEE GENERAL NOTES
		L.F.	C.Y.	EACH	EACH	EACH		L.F.	L.F.	EACH	EACH	C.Y.		EACH	C.Y.			
PV2-18	SW 121+91.4 (43.1' RT)													1				18
PV2-19	SE 121+98.7 (7.2' LT)					1												7
PV2-20	SW 119+48.0 (50.1' RT) TO M 123+15.7 (47.1' RT)																	
PV2-21	M 123+15.5 (46.1' RT) TO M 125+00.0 (41.5' RT)																	
PV2-22	M 123+10.5 (61.0' LT) TO WN 126+88.9 (35.5' RT)																	
PV2-23	EN 123+25.6 (7.7' LT)					1												7
PV2-24	WN 123+35.9 (51.1' RT)					1												7
PV2-25	WN 123+17.3 (8.5' LT)					1												7
PV2-26	ES 115+73.6 (47.3' LT) TO ES 118+20.2 (63.4' LT)							247										20
PV2-27	ES 120+63.3 (49.2 LT)																	
PV2-28	WN 123+43.7 (6.0' LT) TO WN 126+73.4 (4.0' LT)																	
PV2-29	WN 127+88.2 (6.0' LT)				1													10, 11
PV2-30	WN 123+42.3 (6.0' LT) TO WN 123+83.4 (4.0' LT)																	
PV2-31	ES 121+44.4 (4.0' RT) TO ES 121+50.8 (4.0' RT)																	
PV2-32	M 119+26.2 (95.0' RT) TO M 120+86.5 (120.0' RT)		14												90			19
PV2-33	M 119+12.90 (121.2' LT) TO M 120.72.36 (99.6' LT)		15												88			19
PV2-34	M 123+76.27 (61.5' LT) TO M 125+32.29 (58.8' LT)																	
PV2-35	M 118+27.1 (50.9' RT) TO M 118+96.0 (48.6' RT)		2												14			19
PV2-36	M 118+07.54 (48.1' LT) TO M 119+28.0 (50.6' LT)		9												48			19
PV2-37	M 120+94.0 (50.6' RT) TO M 121+76.09 (48.2' RT)		3												33			19
PV2-38	M 121+05.0 (48.5' LT) TO M 121+69.98 (51.2' LT)		4												8			19
PV2-39	ES 118+54.1 (79.3' LT) TO M 117+61.5 (108.4' LT)				2													10, 12
PV2-40	NW 124+28.0 (46' LT)				1													10, 12
PV2-41	WN 123+83.6 (4.0' LT) TO WN 124+34.9 (4.0' LT)																	
PV2-42	NE 124+12.7 (4.0' RT) TO NE 124+24.0 (4.0' RT)																	
PV2-43	ES 121+50.8 (4.0' RT) TO ES 121+91.7 (8.4' RT)																	
PV2-44	SW 121+00.0 (5.0' RT) TO SW 121+15.4 (4.0' RT)																	
PV2-45	WN 123+42.31 (7.5' LT)																	
PV2-46	WN 125+93.0 (43' RT) TO WN 126+93.0 (38' RT)				2													10, 11
PV2-47	M 122+63.94 (63' LT) TO WN 124+61.02 (50.21' RT)				5													10, 11
PV2-48	NE 128+20.5 (5.5' RT)				1													10, 11
PV2-49	NE 123+72.4 (7.5' RT)																	10, 11
PV2-50	NW 122+59.0 (40' LT) TO NW 125+74.5 (23.0' LT)				6													10,11
PV2-51	SW 117+28.96 (5.9' LT) TO SW 121+29.20 (6.5' LT)				10													10,11
	SHEET TOTAL	0	47	0	28	4		247	0	0	0	0		1	281			

GENERAL NOTES:

1. SEE WALL DETAILS (WD SHEETS), SEW TRAFFIC BARRIER.
2. SEE STANDARD PLAN L-20.10-03, COATED CHAIN LINK FENCE, TYPE 4
3. SEE STANDARD PLAN C-20.14-03, BEAM GUARDRAIL TYPE 31: PLACEMENT
4. SEE STANDARD PLAN C-22.40-05, BEAM GUARDRAIL TYPE 31: NON-FLARED TERMINAL
5. SEE STANDARD PLAN C-23.60-03, BEAM GUARDRAIL (TYPE 31) ANCHOR TYPE 10
6. SEE STANDARD PLAN C-25.20-06, BEAM GUARDRAIL (TYPE 31) TRANSITION SECTION TYPE 21
7. SEE STANDARD PLAN F-40.15-03, CURB RAMP (TYPE PERPENDICULAR A)
8. SEE STANDARD PLAN F-10.62-02, PRECAST SLOPED MOUNTABLE CURB
9. SEE STANDARD PLAN F-10.12-03, CEMENT CONCRETE CURBS
10. SEE STANDARD PLAN M-40.10-03, GUIDE POST AND BARRIER DELINEATORS, SIDE MOUNT FOR BARRIER DELINEATORS OR GUARDRAIL MOUNT ON STEEL GUARDRAIL POST
11. SEE STANDARD PLAN M-40.20-00, GUIDE POST PLACEMENT INTERCHANGES
12. SEE WSDOT HIGHWAY RUNOFF BMP HR-1 (APR. 2014).
13. SEE WSDOT HIGHWAY RUNOFF BMP HR-2 (APR. 2014).
14. SEE STANDARD PLAN C-24.10-01, GUARDRAIL CONNECTION TO BRIDGE TRAFFIC BARRIER (D CONNECTION).
15. SEE STANDARD PLAN F-10.64-03, PRECAST DUAL FACED SLOPED MOUNTABLE CURB
16. SEE STANDARD PLAN L-30.10-02, COATED CHAIN LINK GATE, DOUBLE 20'
17. SEE STANDARD PLAN F-10.24-00, EXTRUDED CURB
18. SEE PD6 SHEET, CEMENT CONC. CURB RAMP TYPE SINGLE DIRECTION MODIFIED
19. SEE SPECIAL PROVISIONS
20. SEE WD SHEETS, CABLE FENCE DETAIL
21. SEE TB SHEETS, GEOSYNTHETIC WALL SINGLE SLOPE TRAFFIC BARRIER
22. SEE WSDOT DM 1620.04(1) (JULY 2014), PERMANENT IMPACT ATTENUATOR

DESIGNED BY	M. TSUN					
ENTERED BY	C. SHARMA					
CHECKED BY	D. PROCTOR					
APPROVED BY	H. LONGFELLOW					
		DATE	DATE	REVISION	BY	

REGION NO.	STATE	FED. AID PROJ. NO.
10	WASH	
JOB NUMBER		
CONTRACT NO.		

TULALIP TRIBES
Parametrix

I-5 / 116TH STREET NE INTERCHANGE IMPROVEMENTS PHASE 4 RAMPS

QUANTITY TABULATION - PAVING

QTPV4

SHEET 116 OF 238 SHEETS

QUANTITY TABULATION - PAVING

NOTE:
THE FIRST NUMBER OF THE "CODE" BELOW REFERS TO THE SHEET NO. OR THE SHEET REFERENCE NO. SHOWING THE CONSTRUCTION FEATURE.

THE SECOND NUMBER REFERS TO THE CONSTRUCTION FEATURE FOUND ON THAT SHEET.

CODE	LOCATION ⤵ \ UNIT OF MEASURE ➢	SEW TRAFFIC BARRIER	GEOSYNTHETIC WALL SINGLE SLOPE TRAFFIC BARRIER	BARRIER DELINEATOR	CEMENT CONC. TRAFFIC CURB AND GUTTER	CEMENT CONC. TRAFFIC CURB		EXTRUDED CURB	BEAM GUARDRAIL TYPE 31 NON-FLARED TERMINAL	BEAM GUARDRAIL TYPE 31	BEAM GUARDRAIL TRANSITION SECTION TYPE 21	BEAM GUARDRAIL ANCHOR TYPE 10		PRECAST SLOPED MOUNTABLE CURB				SEE GENERAL NOTES
		L.F.	L.F.	EACH	L.F.	L.F.		L.F.	EACH	L.F.	EACH	EACH		L.F.				
PV2-52	SW 121+15.4 (4.0' LT) TO SW 121+56.4 (6.8' RT)		41.5															21
PV2-53	M 123+68.7 (65.9' LT)																	
PV2-54	SE 119+77.7 (21.2' RT) TO M 122+37.8 (58.5' RT)			7														10, 11
PV2-55	NE 123+72.2 (6.0' RT) TO NE 124+12.7 (4.0' RT)		40															21
PV2-56	NE 124+11.91 (6.0' RT) TO NE 126+94.35 (6.0' RT)			1														10, 11
PV2-57	ES 121+10.2 (61.0' LT) TO M 117+37.1 (63.0' RT)																	
PV2-58	ES 117+90.37 (6.0' RT) TO ES 121+52.71 (6.0' RT)			1														10, 11
PV2-59	ES 121+90.9 (8.0' RT)			1														10, 11
PV2-60	WN 123+43.7 (6.0' LT)										1							6, 14
PV2-61	SW 121+15.5 (4.0' RT)										1							6, 14
PV2-62	ES 121+50.8 (4.0' RT)										1							6, 14
PV2-63	WN 127+23.4 (4.0' LT)											1						5
PV2-64	WN 123+42.3 (6.0' LT) TO WN 123+83.4 (4.0' LT)		40															21
PV2-65	SW 119+16.8 (52.7' RT) TO SW 119+45.8 (51.0' RT)							32										9
PV2-66	M 118+54.4 (10.0' LT) TO M 118+60.4 (10.0' LT)																	
PV2-67	M 121+42.5 (9.6' RT) TO M 121+50.0 (9.7' RT)																	
PV2-68	LM 220+21.5 (73.7' LT) TO LM 224+81.5 (73.9' LT)																	
PV2-69	LM 220+04.5 (74.3' RT) TO LM 224+84.5 (74.3' RT)																	
PV3-1	NE 129+80.0 (6.0' RT)																	
PV3-2	NE 130+73.5 (22.0' LT) TO LM 235+71.0 (69.0' LT)																	
PV3-3	NE 129+92.5 (44.0' LT)																	
PV3-4	WN 130+15.5 (26.0' RT) TO LM 234+16.5 (87.0' RT)																	
PV3-5	WN 126+90.0 (54.0' RT) TO LM 235+14.5 (106.0' RT)																	
PV3-6	WN 129+33.5 (6.0' LT)																	
PV4-1	M 110+98.6 (7.5' RT) TO M 118+54.4 (10' LT)													1536				8
PV4-2	M 115+46.7 (61.5' RT) TO M 115+84.2 (61.5' LT)									37.5								3
PV4-3	M 110+78.3 (7.5' RT) TO M 110+98.6 (7.5' RT)																	
PV4-4	M 115+55.7 (62.0' RT)											1						5
PV4-5	M 115+47.7 (61.0' RT) TO M 117+37.1 (61.0' RT)				191													9
PV4-6	M 115+47.7 (61.0' LT) TO NW 124+27.1 (21.9' LT)				325													9
PV4-7	M 116+34.0 (65.9' LT)								1									4
PV4-8	M 112+39.3 (4.5' RT) TO M 112+44.0 (3.4' RT)																	
PV5-1	M 127+73.7 (6.8' LT) TO M 128+05.0 (6.5' LT)																	
	SHEET TOTAL	0	121.5	10	516	0		32	1	37.5	3	2		1536				
	PROJECT TOTAL	356	163	15	1345	1007		113	4	2550.5	4	5		2860				

GENERAL NOTES:

1. SEE WALL DETAILS (WD SHEETS), SEW TRAFFIC BARRIER.
2. SEE STANDARD PLAN L-20.10-03, COATED CHAIN LINK FENCE, TYPE 4
3. SEE STANDARD PLAN C-20.14-03, BEAM GUARDRAIL TYPE 31: PLACEMENT
4. SEE STANDARD PLAN C-22.40-05, BEAM GUARDRAIL TYPE 31: NON-FLARED TERMINAL
5. SEE STANDARD PLAN C-23.60-03, BEAM GUARDRAIL (TYPE 31) ANCHOR TYPE 10
6. SEE STANDARD PLAN C-25.20-06, BEAM GUARDRAIL (TYPE 31) TRANSITION SECTION TYPE 21
7. SEE STANDARD PLAN F-40.15-03, CURB RAMP (TYPE PERPENDICULAR A)
8. SEE STANDARD PLAN F-10.62-02, PRECAST SLOPED MOUNTABLE CURB
9. SEE STANDARD PLAN F-10.12-03, CEMENT CONCRETE CURBS
10. SEE STANDARD PLAN M-40.10-03, GUIDE POST AND BARRIER DELINEATORS, SIDE MOUNT FOR BARRIER DELINEATORS OR GUARDRAIL MOUNT ON STEEL GUARDRAIL POST
11. SEE STANDARD PLAN M-40.20-00, GUIDE POST PLACEMENT INTERCHANGES
12. SEE WSDOT HIGHWAY RUNOFF BMP HR-1 (APR. 2014).
13. SEE WSDOT HIGHWAY RUNOFF BMP HR-2 (APR. 2014).
14. SEE STANDARD PLAN C-24.10-01, GUARDRAIL CONNECTION TO BRIDGE TRAFFIC BARRIER (D CONNECTION).
15. SEE STANDARD PLAN F-10.64-03, PRECAST DUAL FACED SLOPED MOUNTABLE CURB
16. SEE STANDARD PLAN L-30.10-02, COATED CHAIN LINK GATE, DOUBLE 20'
17. SEE STANDARD PLAN F-10.24-00, EXTRUDED CURB
18. SEE PD6 SHEET, CEMENT CONC. CURB RAMP TYPE SINGLE DIRECTION MODIFIED
19. SEE SPECIAL PROVISIONS
20. SEE WD SHEETS, CABLE FENCE DETAIL
21. SEE TB SHEETS, GEOSYNTHETIC WALL SINGLE SLOPE TRAFFIC BARRIER
22. SEE WSDOT DM 1620.04(1) (JULY 2014), PERMANENT IMPACT ATTENUATOR

DESIGNED BY	M. TSUN			REGION NO.	STATE	FED. AID PROJ. NO.
ENTERED BY	C. SHARMA			10	WASH	
CHECKED BY	D. PROCTOR			JOB NUMBER		
APPROVED BY	H. LONGFELLOW			CONTRACT NO.		
		DATE	DATE	REVISION	BY	

TULALIP TRIBES
Parametrix

I-5 / 116TH STREET NE
INTERCHANGE IMPROVEMENTS
PHASE 4 RAMPS

QUANTITY TABULATION - PAVING

QTPV5

QUANTITY TABULATION - PAVING

NOTE:
THE FIRST NUMBER OF THE "CODE" BELOW REFERS TO THE SHEET NO. OR THE SHEET REFERENCE NO. SHOWING THE CONSTRUCTION FEATURE.

THE SECOND NUMBER REFERS TO THE CONSTRUCTION FEATURE FOUND ON THAT SHEET.

CODE	LOCATION ⤵ \ UNIT OF MEASURE ➢	PRECAST DUAL FACED SLOPED MOUNTABLE CURB	CONC. CLASS 4000 FOR TRAFFIC ISLAND	PERMENANT IMPACT ATTENUATOR	FLEXIBLE GUIDE POST	CEMENT CONC. CURB RAMP TYPE A		CABLE FENCE	COATED CHAIN LINK FENCE TYPE 4	COATED END, GATE, CORNER, PULLPOST FOR CHAIN LINK FENCE	DOUBLE 20 FT. COATED CHAIN LINK GATE	LEAN CONCRETE		CEMENT CONC. CURB RAMP TYPE SINGLE DIRECTION MODIFIED	TEXTURED CEMENT CONCRETE PAVEMENT CLASS 4000 FOR TRAFFIC ISLAND			SEE GENERAL NOTES
		L.F.	C.Y.	EACH	EACH	EACH		L.F.	L.F.	EACH	EACH	C.Y.		EACH	C.Y.			
PV2-52	SW 121+15.4 (4.0' LT) TO SW 121+56.4 (6.8' RT)																	
PV2-53	M 123+68.7 (65.9' LT)				1													10, 13
PV2-54	SE 119+77.7 (21.2' RT) TO M 122+37.8 (58.5' RT)																	
PV2-55	NE 123+72.2 (6.0' RT) TO NE 124+12.7 (4.0' RT)																	
PV2-56	NE 124+11.91 (6.0' RT) TO NE 126+94.35 (6.0' RT)				7													10, 11
PV2-57	ES 121+10.2 (61.0' LT) TO M 117+37.1 (63.0' RT)				4													10, 11
PV2-58	ES 117+90.37 (6.0' RT) TO ES 121+52.71 (6.0' RT)				9													10, 11
PV2-59	ES 121+90.9 (8.0' RT)																	
PV2-60	WN 123+43.7 (6.0' LT)																	
PV2-61	SW 121+15.5 (4.0' RT)																	
PV2-62	ES 121+50.8 (4.0' RT)																	
PV2-63	WN 127+23.4 (4.0' LT)																	
PV2-64	WN 123+42.3 (6.0' LT) TO WN 123+83.4 (4.0' LT)		2															21
PV2-65	SW 119+16.8 (52.7' RT) TO SW 119+45.8 (51.0' RT)																	
PV2-66	M 118+54.4 (10.0' LT) TO M 118+60.4 (10.0' LT)	6																15
PV2-67	M 121+42.5 (9.6' RT) TO M 121+50.0 (9.7' RT)	7																15
PV2-68	LM 220+21.5 (73.7' LT) TO LM 224+81.5 (73.9' LT)											1.5						19
PV2-69	LM 220+04.5 (74.3' RT) TO LM 224+84.5 (74.3' RT)											1.5						19
PV3-1	NE 129+80.0 (6.0' RT)				1													10,11
PV3-2	NE 130+73.5 (22.0' LT) TO LM 235+71.0 (69.0' LT)				6													10,11
PV3-3	NE 129+92.5 (44.0' LT)				1													10, 12
PV3-4	WN 130+15.5 (26.0' RT) TO LM 234+16.5 (87.0' RT)				5													10, 11
PV3-5	WN 126+90.0 (54.0' RT) TO LM 235+14.5 (106.0' RT)				3													10, 12
PV3-6	WN 129+33.5 (6.0' LT)				1													10, 11
PV4-1	M 110+98.6 (7.5' RT) TO M 118+54.4 (10' LT)																	
PV4-2	M 115+46.7 (61.5' RT) TO M 115+84.2 (61.5' LT)																	
PV4-3	M 110+78.3 (7.5' RT) TO M 110+98.6 (7.5' RT)	20																15
PV4-4	M 115+55.7 (62.0' RT)																	
PV4-5	M 115+47.7 (61.0' RT) TO M 117+37.1 (61.0' RT)																	
PV4-6	M 115+47.7 (61.0' LT) TO NW 124+27.1 (21.9' LT)																	
PV4-7	M 116+34.0 (65.9' LT)																	
PV4-8	M 112+39.3 (4.5' RT) TO M 112+44.0 (3.4' RT)	9																15
PV5-1	M 127+73.7 (6.8' LT) TO M 128+05.0 (6.5' LT)	31																15
	SHEET TOTAL	73	2	0	38	0		0	0	0	0	3		0	0			
	PROJECT TOTAL	73	49	1	105	10		375	40	4	1	3		2	281			

GENERAL NOTES:

1. SEE WALL DETAILS (WD SHEETS), SEW TRAFFIC BARRIER.
2. SEE STANDARD PLAN L-20.10-03, COATED CHAIN LINK FENCE, TYPE 4
3. SEE STANDARD PLAN C-20.14-03, BEAM GUARDRAIL TYPE 31: PLACEMENT
4. SEE STANDARD PLAN C-22.40-05, BEAM GUARDRAIL TYPE 31: NON-FLARED TERMINAL
5. SEE STANDARD PLAN C-23.60-03, BEAM GUARDRAIL (TYPE 31) ANCHOR TYPE 10
6. SEE STANDARD PLAN C-25.20-06, BEAM GUARDRAIL (TYPE 31) TRANSITION SECTION TYPE 21
7. SEE STANDARD PLAN F-40.15-03, CURB RAMP (TYPE PERPENDICULAR A)
8. SEE STANDARD PLAN F-10.62-02, PRECAST SLOPED MOUNTABLE CURB
9. SEE STANDARD PLAN F-10.12-03, CEMENT CONCRETE CURBS
10. SEE STANDARD PLAN M-40.10-03, GUIDE POST AND BARRIER DELINEATORS, SIDE MOUNT FOR BARRIER DELINEATORS OR GUARDRAIL MOUNT ON STEEL GUARDRAIL POST
11. SEE STANDARD PLAN M-40.20-00, GUIDE POST PLACEMENT INTERCHANGES
12. SEE WSDOT HIGHWAY RUNOFF BMP HR-1 (APR. 2014).
13. SEE WSDOT HIGHWAY RUNOFF BMP HR-2 (APR. 2014).
14. SEE STANDARD PLAN C-24.10-01, GUARDRAIL CONNECTION TO BRIDGE TRAFFIC BARRIER (D CONNECTION).
15. SEE STANDARD PLAN F-10.64-03, PRECAST DUAL FACED SLOPED MOUNTABLE CURB
16. SEE STANDARD PLAN L-30.10-02, COATED CHAIN LINK GATE, DOUBLE 20'
17. SEE STANDARD PLAN F-10.24-00, EXTRUDED CURB
18. SEE PD6 SHEET, CEMENT CONC. CURB RAMP TYPE SINGLE DIRECTION MODIFIED
19. SEE SPECIAL PROVISIONS
20. SEE WD SHEETS, CABLE FENCE DETAIL
21. SEE TB SHEETS, GEOSYNTHETIC WALL SINGLE SLOPE TRAFFIC BARRIER
22. SEE WSDOT DM 1620.04(1) (JULY 2014), PERMANENT IMPACT ATTENUATOR

DESIGNED BY	M. TSUN					
ENTERED BY	C. SHARMA					
CHECKED BY	D. PROCTOR					
APPROVED BY	H. LONGFELLOW					
		DATE	DATE	REVISION	BY	

REGION NO.	STATE	FED. AID PROJ. NO.
10	WASH	
JOB NUMBER		
CONTRACT NO.		

TULALIP TRIBES
Parametrix

I-5 / 116TH STREET NE
INTERCHANGE IMPROVEMENTS
PHASE 4 RAMPS

QUANTITY TABULATION - PAVING

QTPV6

SHEET 118 OF 238 SHEETS

LEGEND

- QUANTITY TAB NOTE
- QUANTITY TAB NOTE CONTINUED
- EDGE OF PAVEMENT
- GUARDRAIL
- CONCRETE BARRIER
- CONCRETE CURB
- FLEXIBLE GUIDE POST/BARRIER DELINEATOR
- FENCE
- CABLE FENCE
- SAWCUT
- PLANING BITUMINOUS PAVEMENT
- EXISTING CONCRETE BARRIER
- EXISTING CABLE BARRIER
- EXISTING FENCE
- EXISTING EDGE OF PAVEMENT
- EXISTING GUARDRAIL

CONSTRUCTION NOTES:

1. FOR HMA WIDENING DETAIL, SEE SHEET PD3.
2. FOR RAISED MEDIAN DETAILS, SEE SHEET PD2.
3. FOR RAISED TRAFFIC ISLAND DETAILS SEE SHEETS PD1 AND PD3.
4. FOR BUTT JOINT PAVING DETAIL SEE SHEET PD3.
5. FOR BRIDGE DECK RAISED TRAFFIC ISLAND, SEE SHEET PD4 DETAIL 7 AND SHEET PD3 DETAIL 2.
6. FOR M LINE PROFILE PLANING DETAIL SEE SHEET PD6.
7. FOR HMA ROADWAY JOINT DETAIL, SEE SHEET PD6 DETAIL 6.

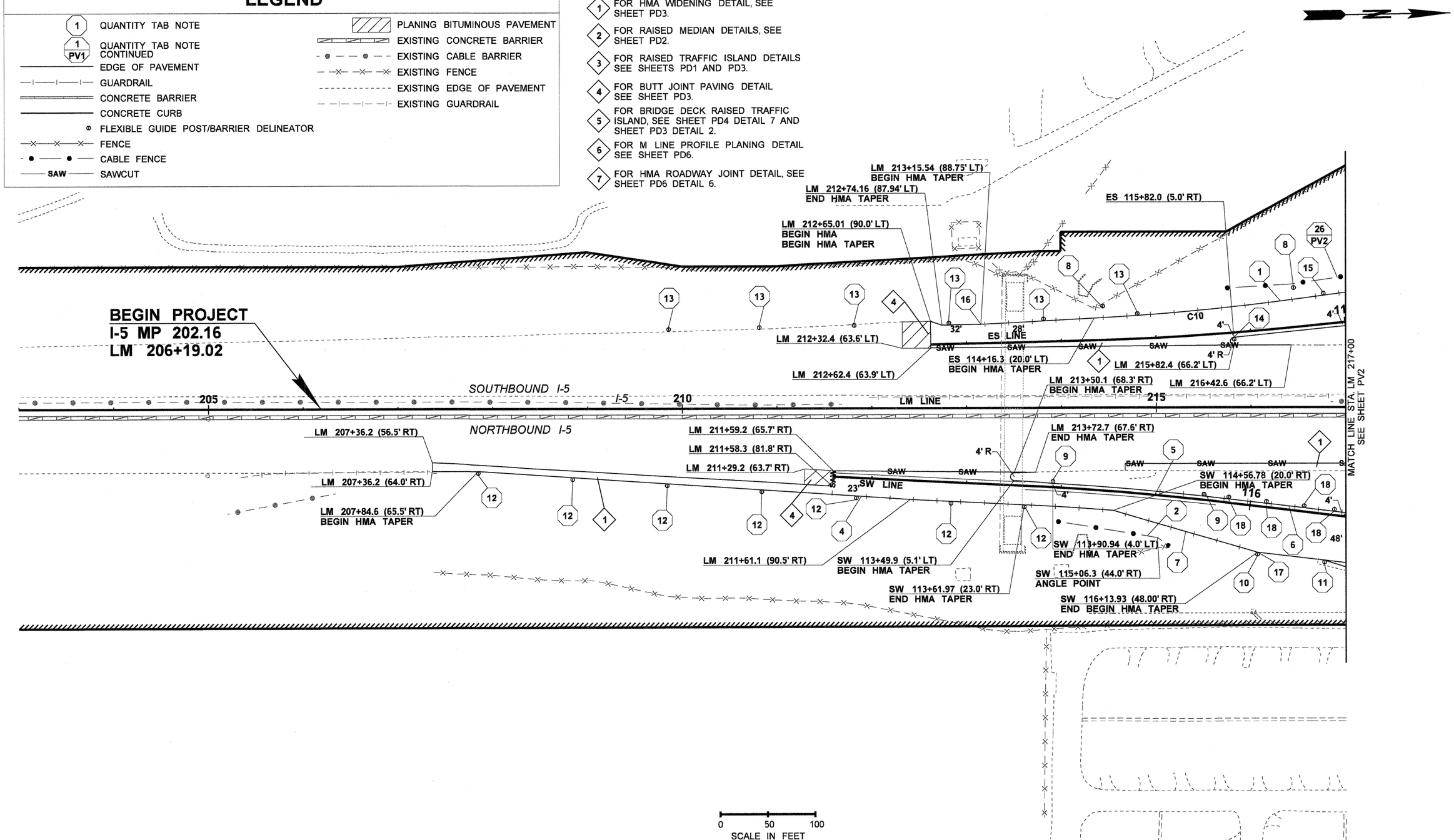

FILE NAME	U:\PSO\Projects\Clients\1598-TulalipTribes\554-1598-095 116th-Ph4-PSE\99Svcs\CADD\DGN\PS&ESheets\BL1598033_PS_PV.dgn
TIME	11:42:53 AM
DATE	8/25/2017
PLOTTED BY	purgabut
DESIGNED BY	M. TSUN
ENTERED BY	B. PURGANAN
CHECKED BY	D. PROCTOR
APPROVED BY	H. LONGFELLOW

REVISION	DATE	BY

REGION NO.	STATE	FED.AID PROJ.NO.
10	WASH	
JOB NUMBER		
CONTRACT NO.		LOCATION NO.

P.E. STAMP BOX — DATE

P.E. STAMP BOX — DATE

TULALIP TRIBES
Parametrix

I-5 / 116TH STREET NE INTERCHANGE IMPROVEMENTS PHASE 4 RAMPS

PAVING PLAN

Plot 2

PLAN REF NO PV1

SHEET 119 OF 238 SHEETS

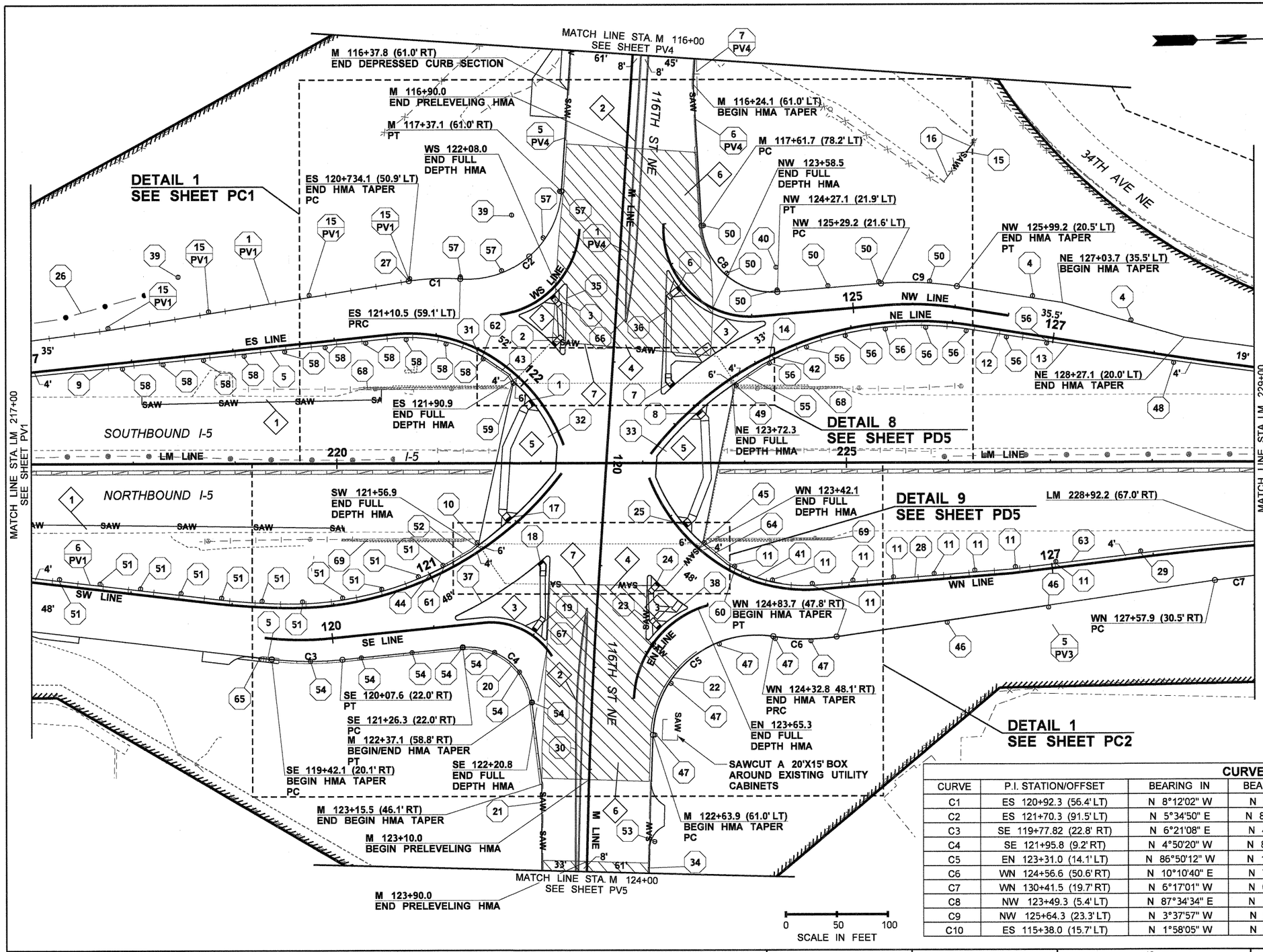

CONSTRUCTION NOTES:

1. FOR HMA WIDENING DETAIL, SEE SHEET PD3.
2. FOR RAISED MEDIAN DETAILS, SEE SHEET PD2.
3. FOR RAISED TRAFFIC ISLAND DETAILS SEE SHEETS PD1 AND PD3.
4. FOR BUTT JOINT PAVING DETAIL SEE SHEET PD3.
5. FOR BRIDGE DECK RAISED TRAFFIC ISLAND, SEE SHEET PD4 DETAIL 7 AND SHEET PD3 DETAIL 2.
6. FOR M LINE PROFILE PLANING DETAIL SEE SHEET PD6.
7. FOR HMA ROADWAY JOINT DETAIL, SEE SHEET PD6 DETAIL 6.

LEGEND

- (1) QUANTITY TAB NOTE
- (1 PV1) QUANTITY TAB NOTE CONTINUED
- EDGE OF PAVEMENT
- GUARDRAIL
- CONCRETE BARRIER
- CONCRETE CURB
- FLEXIBLE GUIDE POST/BARRIER DELINEATOR
- FENCE
- CABLE FENCE
- SAW — SAWCUT
- PLANING BITUMINOUS PAVEMENT
- EXISTING CONCRETE BARRIER
- EXISTING CABLE BARRIER
- EXISTING FENCE
- EXISTING EDGE OF PAVEMENT
- EXISTING GUARDRAIL

CURVE DATA

CURVE	P.I. STATION/OFFSET	BEARING IN	BEARING OUT	DELTA	RADIUS	TANGENT	LENGTH
C1	ES 120+92.3 (56.4' LT)	N 8°12'02" W	N 5°34'50" E	13°46'51.8" RT	208.0'	25.14	50.0'
C2	ES 121+70.3 (91.5' LT)	N 5°34'50" E	N 85°17'57" W	90°53'29.8" LT	92.0'	93.44	145.9'
C3	SE 119+77.82 (22.8' RT)	N 6°21'08" E	N 4°50'42" W	11°11'50.0" LT	320.0'	31.37	62.5'
C4	SE 121+95.8 (9.2' RT)	N 4°50'20" W	N 83°52'43" E	88°43'03.5" RT	62.0'	60.63	96.0'
C5	EN 123+31.0 (14.1' LT)	N 86°50'12" W	N 10°10'40" E	97°00'51.7" RT	102.0'	115.32	172.7'
C6	WN 124+56.6 (50.6' RT)	N 10°10'40" E	N 7°25'56" W	17°36'35.8" LT	203.0'	31.44	62.4'
C7	WN 130+41.5 (19.7' RT)	N 6°17'01" W	N 0°15'55" W	6°02'05.3" RT	3459.0'	182.34	364.4'
C8	NW 123+49.3 (5.4' LT)	N 87°34'34" E	N 3°37'57" W	91°12'31.0" LT	69.0'	70.47	109.8'
C9	NW 125+64.3 (23.3' LT)	N 3°37'57" W	N 9°45'00" E	13°22'57.6" RT	320.0'	37.54	74.7'
C10	ES 115+38.0 (15.7' LT)	N 1°58'05" W	N 6°39'26" E	4°41'21.2" LT	2490.0'	101.95	203.79'

FILE NAME	U:\PSO\Projects\Clients\1598-TulalipTribes\554-1598-095 116th-Ph4-PSE\99Svcs\CADD\DGN\PS&ESheets\BL1598033_PS_PV.dgn
TIME	11:43:03 AM
DATE	8/25/2017
PLOTTED BY	purgabut
DESIGNED BY	M. TSUN
ENTERED BY	B. PURGANAN
CHECKED BY	D. PROCTOR
APPROVED BY	H. LONGFELLOW

REVISION | DATE | BY

REGION NO. 10 | STATE WASH | FED.AID PROJ.NO.

JOB NUMBER

CONTRACT NO. | LOCATION NO.

P.E. STAMP BOX — DATE

HARRY DAVID LONGFELLOW, STATE OF WASHINGTON, 37902, REGISTERED PROFESSIONAL ENGINEER — DATE

P.E. STAMP BOX

TULALIP TRIBES — Parametrix

I-5 / 116TH STREET NE INTERCHANGE IMPROVEMENTS PHASE 4 RAMPS

PAVING PLAN

Plot 3

PLAN REF NO PV2

SHEET 120 OF 238 SHEETS

LEGEND

- QUANTITY TAB NOTE
- QUANTITY TAB NOTE CONTINUED
- EDGE OF PAVEMENT
- GUARDRAIL
- CONCRETE BARRIER
- CONCRETE CURB
- FLEXIBLE GUIDE POST/BARRIER DELINEATOR
- FENCE
- CABLE FENCE
- SAWCUT
- PLANING BITUMINOUS PAVEMENT
- EXISTING CONCRETE BARRIER
- EXISTING CABLE BARRIER
- EXISTING FENCE
- EXISTING EDGE OF PAVEMENT
- EXISTING GUARDRAIL

CONSTRUCTION NOTES:

1. FOR HMA WIDENING DETAIL, SEE SHEET PD3.
2. FOR RAISED MEDIAN DETAILS, SEE SHEET PD2.
3. FOR RAISED TRAFFIC ISLAND DETAILS SEE SHEETS PD1 AND PD3.
4. FOR BUTT JOINT PAVING DETAIL SEE SHEET PD3.
5. FOR BRIDGE DECK RAISED TRAFFIC ISLAND, SEE SHEET PD4 DETAIL 7 AND SHEET PD3 DETAIL 2.
6. FOR M LINE PROFILE PLANING DETAIL SEE SHEET PD6.
7. FOR HMA ROADWAY JOINT DETAIL, SEE SHEET PD6 DETAIL 6.

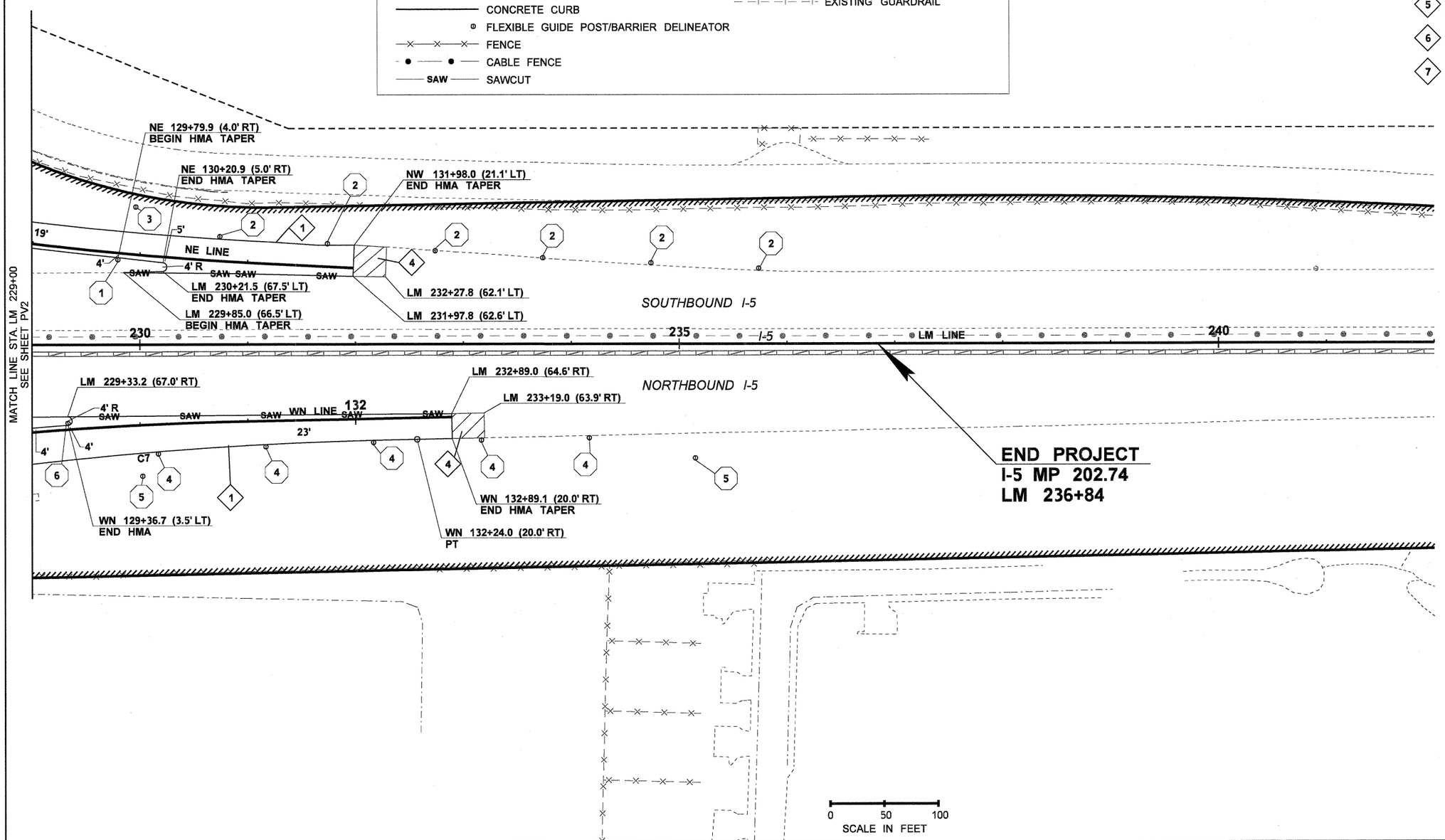

FILE NAME	U:\PSO\Projects\Clients\1598-TulalipTribes\554-1598-095 116th-Ph4-PSE\99Svcs\CADD\DGN\PS&ESheets\BL1598033_PS_PV.dgn				REGION NO. 10	STATE WASH	FED.AID PROJ.NO.
TIME	11:43:18 AM				JOB NUMBER		
DATE	8/25/2017						
PLOTTED BY	purgabut						
DESIGNED BY	M. TSUN						
ENTERED BY	B. PURGANAN						
CHECKED BY	D. PROCTOR				CONTRACT NO.		LOCATION NO.
APPROVED BY	H. LONGFELLOW						
		REVISION	DATE	BY			

P.E. STAMP BOX — DATE

HARRY DAVID LONGFELLOW — STATE OF WASHINGTON — 37902 — REGISTERED PROFESSIONAL ENGINEER — 8/25/17

P.E. STAMP BOX — DATE

TULALIP TRIBES — Parametrix

I-5 / 116TH STREET NE INTERCHANGE IMPROVEMENTS PHASE 4 RAMPS

PAVING PLAN

Plot 4

PLAN REF NO PV3

SHEET 121 OF 238 SHEETS

CONSTRUCTION NOTES:

1. FOR HMA WIDENING DETAIL, SEE SHEET PD3.
2. FOR RAISED MEDIAN DETAILS, SEE SHEET PD2.
3. FOR RAISED TRAFFIC ISLAND DETAILS SEE SHEETS PD1 AND PD3.
4. FOR BUTT JOINT PAVING DETAIL SEE SHEET PD3.
5. FOR BRIDGE DECK RAISED TRAFFIC ISLAND, SEE SHEET PD4 DETAIL 7 AND SHEET PD3 DETAIL 2.
6. FOR M LINE PROFILE PLANING DETAIL SEE SHEET PD6.
7. FOR HMA ROADWAY JOINT DETAIL, SEE SHEET PD6 DETAIL 6.

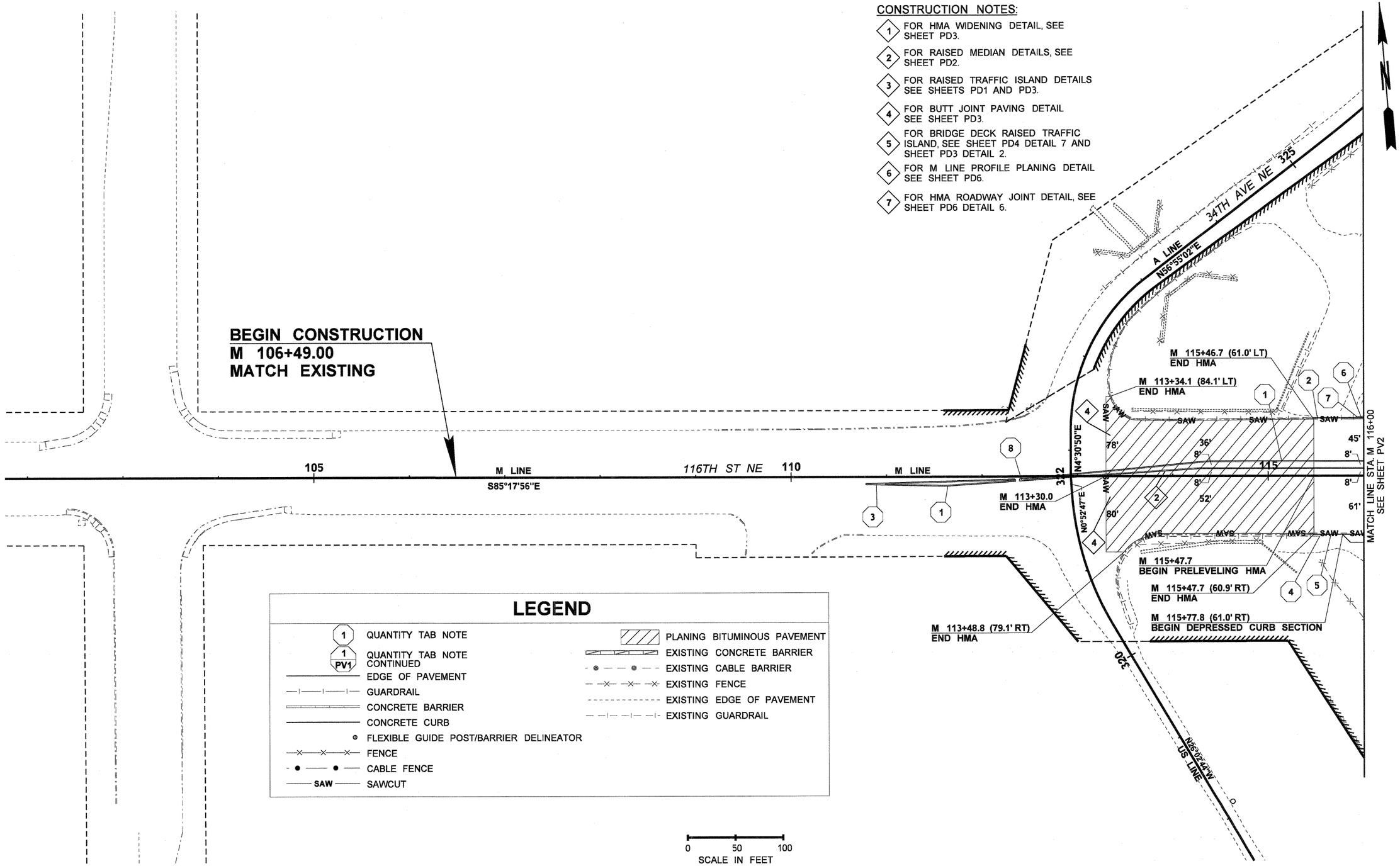

FILE NAME	U:\PSO\Projects\Clients\1598-TulalipTribes\554-1598-095 116th-Ph4-PSE\99Svcs\CADD\DGN\PS&ESheets\BL1598033_PS_PV.dgn
TIME	11:43:40 AM
DATE	8/25/2017
PLOTTED BY	purgabut
DESIGNED BY	M. TSUN
ENTERED BY	B. PURGANAN
CHECKED BY	D. PROCTOR
APPROVED BY	H. LONGFELLOW

REVISION	DATE	BY

REGION NO.	STATE	FED.AID PROJ.NO.
10	WASH	
JOB NUMBER		
CONTRACT NO.		LOCATION NO.

P.E. STAMP BOX — DATE

P.E. STAMP BOX — DATE

TULALIP TRIBES
Parametrix

I-5 / 116TH STREET NE INTERCHANGE IMPROVEMENTS PHASE 4 RAMPS

PAVING PLAN

Plot 6

PLAN REF NO PV4

SHEET 122 OF 238 SHEETS

LEGEND

- QUANTITY TAB NOTE
- QUANTITY TAB NOTE CONTINUED
- EDGE OF PAVEMENT
- GUARDRAIL
- CONCRETE BARRIER
- CONCRETE CURB
- FLEXIBLE GUIDE POST/BARRIER DELINEATOR
- FENCE
- CABLE FENCE
- SAWCUT
- PLANING BITUMINOUS PAVEMENT
- EXISTING CONCRETE BARRIER
- EXISTING CABLE BARRIER
- EXISTING FENCE
- EXISTING EDGE OF PAVEMENT
- EXISTING GUARDRAIL

CONSTRUCTION NOTES:

1. FOR HMA WIDENING DETAIL, SEE SHEET PD3.
2. FOR RAISED MEDIAN DETAILS, SEE SHEET PD2.
3. FOR RAISED TRAFFIC ISLAND DETAILS SEE SHEETS PD1 AND PD3.
4. FOR BUTT JOINT PAVING DETAIL SEE SHEET PD3.
5. FOR BRIDGE DECK RAISED TRAFFIC ISLAND, SEE SHEET PD4 DETAIL 7 AND SHEET PD3 DETAIL 2.
6. FOR M LINE PROFILE PLANING DETAIL SEE SHEET PD6.
7. FOR HMA ROADWAY JOINT DETAIL, SEE SHEET PD6 DETAIL 6.

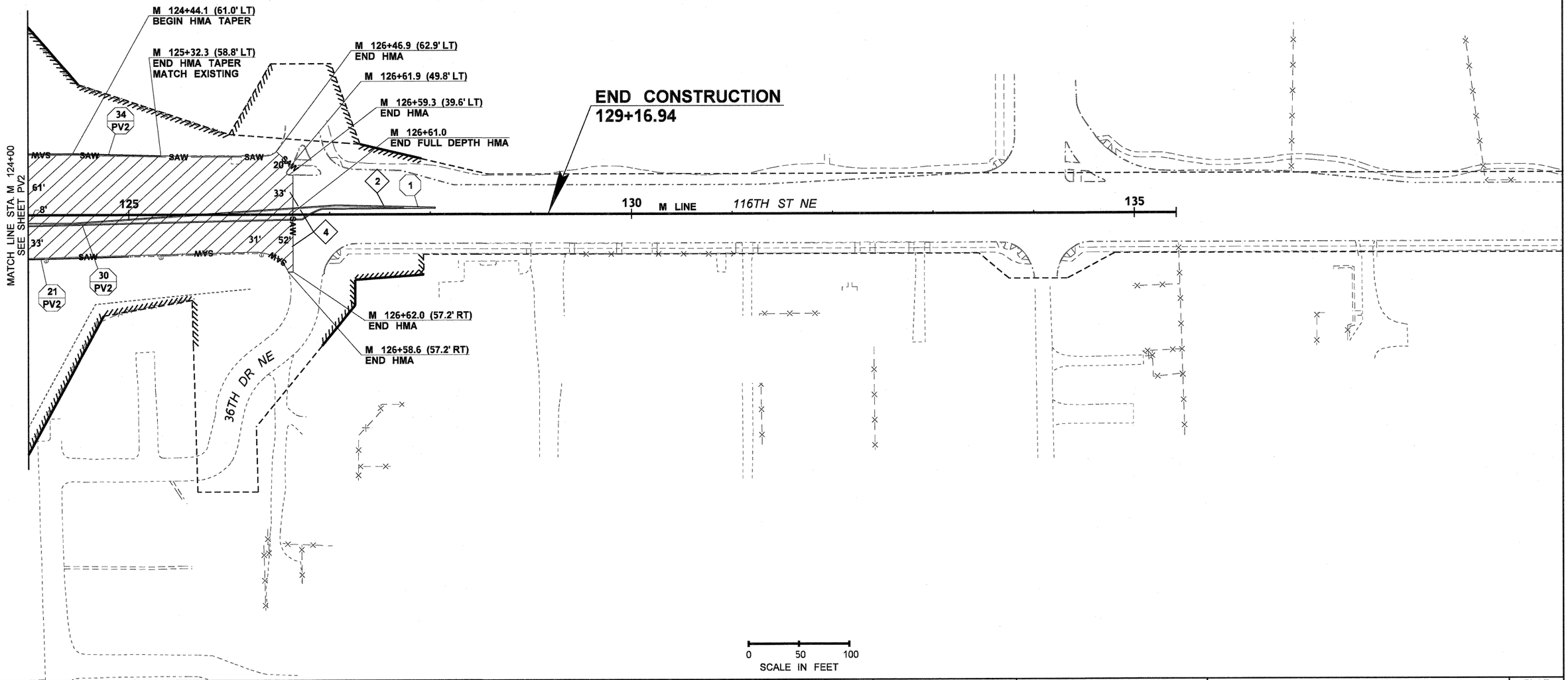

FILE NAME	U:\PSO\Projects\Clients\1598-TulalipTribes\554-1598-095 116th-Ph4-PSE\99Svcs\CADD\DGN\PS&ESheets\BL1598033_PS_PV.dgn				REGION NO.	STATE	FED.AID PROJ.NO.
TIME	11:43:51 AM				10	WASH	
DATE	8/25/2017				JOB NUMBER		
PLOTTED BY	purgabut						
DESIGNED BY	M. TSUN				CONTRACT NO.		LOCATION NO.
ENTERED BY	B. PURGANAN						
CHECKED BY	D. PROCTOR						
APPROVED BY	H. LONGFELLOW						
		REVISION	DATE	BY			

P.E. STAMP BOX — DATE

P.E. STAMP BOX — DATE

TULALIP TRIBES — Parametrix ©

I-5 / 116TH STREET NE INTERCHANGE IMPROVEMENTS PHASE 4 RAMPS

PAVING PLAN

Plot 7

PLAN REF NO **PV5**

SHEET 123 OF 238 SHEETS

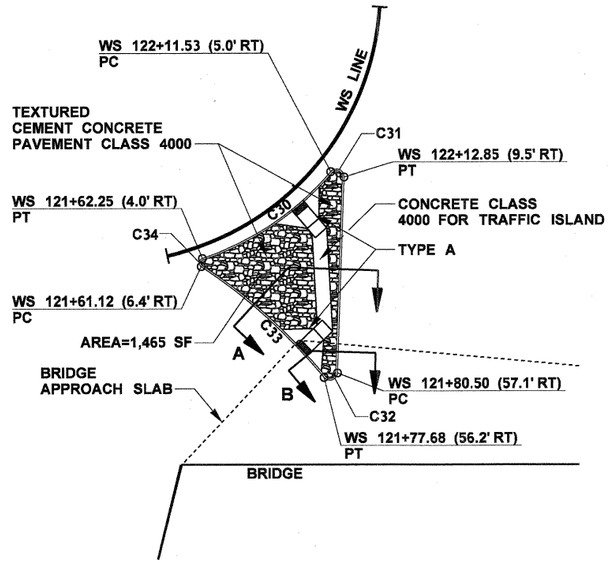

RAISED TRAFFIC ISLAND DETAIL
I-5 SOUTH BOUND ON-RAMP

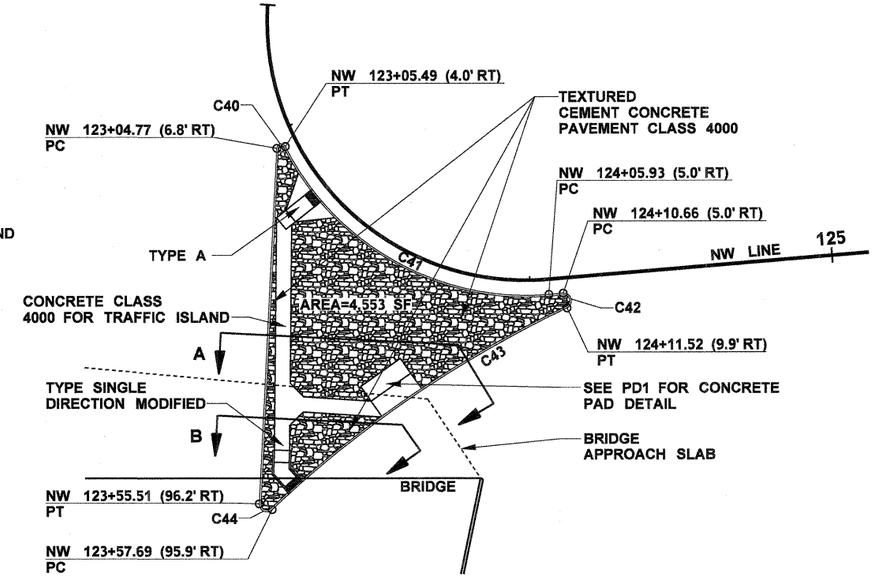

RAISED TRAFFIC ISLAND DETAIL
I-5 SOUTH BOUND OFF-RAMP

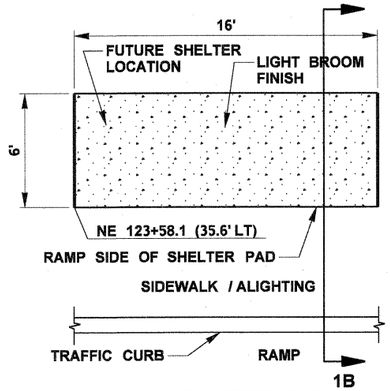

CONCRETE PAD DETAIL
1A
NOT TO SCALE

NOTES:

1. ALL SIDEWALK RAMPS SHALL MEET CURRENT ADA REQUIREMENTS. SEE WSDOT PLAN F-40.15-03.
2. FOR ISLAND SECTIONS A AND B, SEE SHEET PD3, DETAILS 1 AND 2.
3. PRIOR TO INSTALLING POST MOUNTED SIGNS ON RAISED TRAFFIC ISLAND, SEE SHEET SN6, DETAIL 1.
4. SEE SHEET PD6 FOR CURB RAMP DETAILS.
5. INSTALL 6'X10' CONCRETE PANEL.

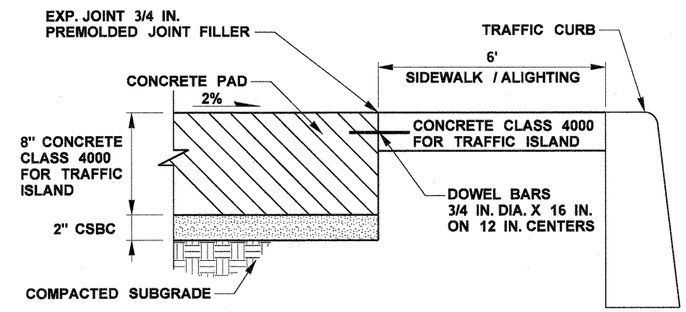

CONCRETE PAD SECTION
1B
NOT TO SCALE

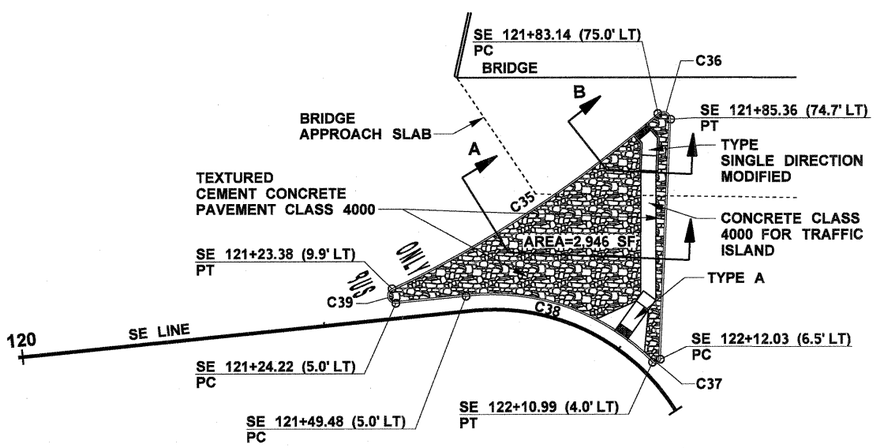

RAISED TRAFFIC ISLAND DETAIL
I-5 NORTH BOUND OFF-RAMP

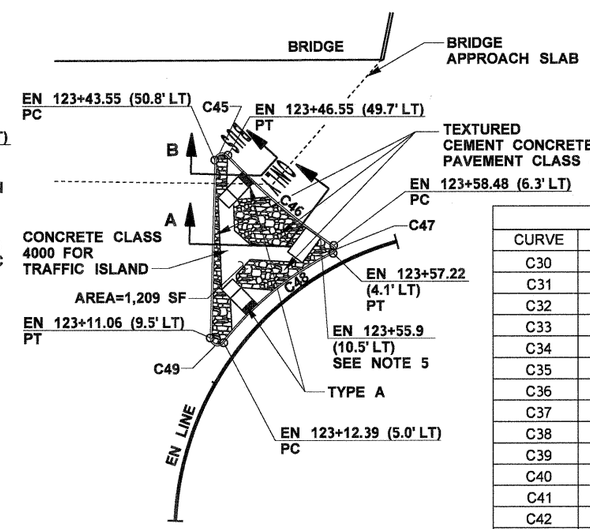

RAISED TRAFFIC ISLAND DETAIL
I-5 NORTH BOUND ON-RAMP

0 25 50
SCALE IN FEET

CURVE DATA

CURVE	P.I. STATION/OFFSET	BEARING IN	BEARING OUT	DELTA	RADIUS	TANGENT	LENGTH
C30	WS 121+86.9 (8.2' RT)	S 17°23'17" E	S 48°46'52" E	31°23'34.2" RT	94.5'	26.56'	51.8'
C31	WS 122+18.3 (5.4' RT)	S 48°46'52" E	N 87°07'15" W	141°39'36.4" LT	2.50	7.19'	6.2'
C32	WS 121+78.4 (62.7' RT)	N 51°29'15" E	N 87°07'15" E	138°36'58.6" LT	2.5'	6.62'	6.1'
C33	WS 121+74.0 (29.2' RT)	N 33°56'46" E	N 51°29'43" E	17°51'07.7" RT	178.0'	27.96'	55.5'
C34	WS 121+59.5 (3.1' RT)	S 17°24'19" E	N 33°56'46" E	128°38'55.0" LT	1.5'	3.12'	3.4'
C35	SE 121+64.5 (26.4' LT)	S 24°26'13" E	S 40°25'26" E	15°59'03.1" RT	378.0'	53.07'	105.5'
C36	SE 121+84.4 (80.3' LT)	S 40°25'16" E	N 86°35'60" W	133°49'16.3" LT	2.5'	5.86'	5.8'
C37	SE 122+14.3 (4.0' LT)	N 46°17'42" E	N 86°36'00" W	132°53'10.0" LT	1.5'	3.44'	3.5'
C38	SE 121+81.2 (13.4' LT)	N 4°50'42" W	N 46°17'10" E	51°07'52.5" RT	74.5'	35.64'	66.5'
C39	SE 120+99.8 (5.0' LT)	S 24°26'13" E	N 4°50'41" W	160°24'27.8" LT	2.5'	14.48'	7.0'
C40	NW 123+00.0 (4.1' RT)	S 86°13'46" E	S 64°17'39" W	150°31'25.2" LT	1.5'	5.70'	3.9'
C41	NW 123+55.7 (23.0' RT)	S 64°17'39" W	S 3°49'55" E	68°07'34.1" RT	89.0'	60.17'	105.8'
C42	NW 124+24.8 (5.0' RT)	S 3°49'55" E	N 23°57'27" W	159°52'27.9" LT	2.5'	14.09'	7.0'
C43	NW 123+70.7 (40.8' RT)	N 42°51'22" W	N 23°57'27" W	18°53'55.4" RT	359.0'	59.75'	118.4'
C44	NW 123+54.1 (127.1' RT)	S 86°13'46" E	N 42°51'23" W	136°37'36.8" LT	2.5'	6.29'	6.0'
C45	EN 123+45.9 (55.8' LT)	N 87°34'58" W	N 47°52'00" E	135°26'57.4" RT	2.5'	6.10'	5.9'
C46	EN 123+49.6 (27.0' LT)	N 47°52'00" E	N 35°07'14" E	12°44'46.0" LT	207.0'	23.12'	46.1'
C47	EN 123+59.7 (4.1' LT)	N 35°07'14" E	S 25°17'58" E	119°34'48.1" RT	1.5'	2.58'	3.1'
C48	EN 123+34.8 (7.2' LT)	S 51°01'25" E	S 25°17'58" E	25°43'26.6" LT	104.5'	23.86'	46.9'
C49	EN 123+05.2 (5.4' LT)	N 87°34'48" W	S 51°01'25" E	143°26'27.1" RT	2.5'	7.56'	6.3'

FILE NAME	U:\PSO\Projects\Clients\1598-TulalipTribes\554-1598-095 116th-Ph4-PSE\99Svcs\CADD\DGN\PS&ESheets\BL1598033_DE_PD.dgn
TIME	11:45:11 AM
DATE	8/25/2017
PLOTTED BY	purgabut
DESIGNED BY	M. TSUN
ENTERED BY	B. PURGANAN
CHECKED BY	D. PROCTOR
APPROVED BY	H. LONGFELLOW

REVISION | DATE | BY

REGION NO. 10 | STATE WASH | FED.AID PROJ.NO.

JOB NUMBER

CONTRACT NO. | LOCATION NO.

P.E. STAMP BOX — DATE

P.E. STAMP BOX — DATE

Parametrix

I-5 / 116TH STREET NE INTERCHANGE IMPROVEMENTS PHASE 4 RAMPS

PAVING DETAILS

Plot 1

PLAN REF NO PD1

SHEET 124 OF 238 SHEETS

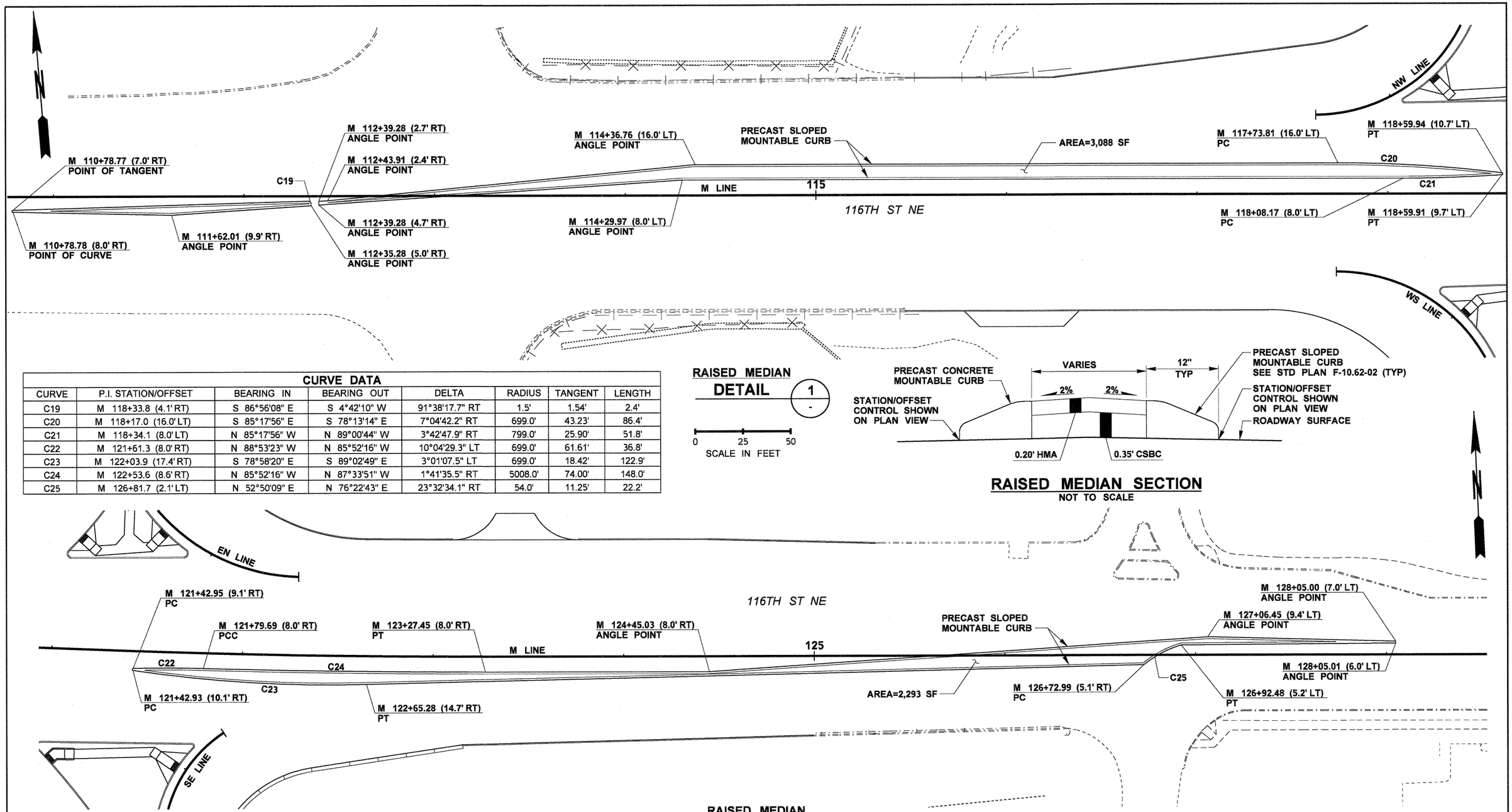

CURVE DATA							
CURVE	P.I. STATION/OFFSET	BEARING IN	BEARING OUT	DELTA	RADIUS	TANGENT	LENGTH
C19	M 118+33.8 (4.1' RT)	S 86°56'08" E	S 4°42'10" W	91°38'17.7" RT	1.5'	1.54'	2.4'
C20	M 118+17.0 (16.0' LT)	S 85°17'56" E	S 78°13'14" E	7°04'42.2" RT	699.0'	43.23'	86.4'
C21	M 118+34.1 (8.0' LT)	N 85°17'56" W	N 89°00'44" W	3°42'47.9" RT	799.0'	25.90'	51.8'
C22	M 121+61.3 (8.0' RT)	N 88°53'23" W	N 85°52'16" W	10°04'29.3" LT	699.0'	61.61'	36.8'
C23	M 122+03.9 (17.4' RT)	S 78°58'20" E	S 89°02'49" E	3°01'07.5" LT	699.0'	18.42'	122.9'
C24	M 122+53.6 (8.6' RT)	N 85°52'16" W	N 87°33'51" W	1°41'35.5" RT	5008.0'	74.00'	148.0'
C25	M 126+81.7 (2.1' LT)	N 52°50'09" E	N 76°22'43" E	23°32'34.1" RT	54.0'	11.25'	22.2'

RAISED MEDIAN
DETAIL 1
-

0 25 50
SCALE IN FEET

RAISED MEDIAN SECTION
NOT TO SCALE

FILE NAME	U:\PSO\Projects\Clients\1598-TulalipTribes\554-1598-095 116th-Ph4-PSE\99Svcs\CADD\DGN\PS&ESheets\BL1598033_DE_PD.dgn					
TIME	11:45:22 AM					
DATE	8/25/2017					
PLOTTED BY	purgabut					
DESIGNED BY	M. TSUN					
ENTERED BY	B. PURGANAN					
CHECKED BY	D. PROCTOR					
APPROVED BY	H. LONGFELLOW					
		REVISION	DATE	BY		

REGION NO.	STATE	FED.AID PROJ.NO.
10	WASH	
JOB NUMBER		
CONTRACT NO.		LOCATION NO.

P.E. STAMP BOX DATE

P.E. STAMP BOX DATE

TULALIP TRIBES
Parametrix

I-5 / 116TH STREET NE
INTERCHANGE IMPROVEMENTS
PHASE 4 RAMPS

PAVING DETAILS

Plot 2
PLAN REF NO
PD2
SHEET 125 OF 238 SHEETS

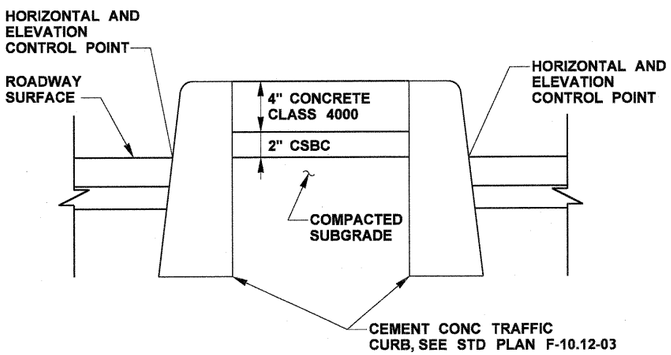

RAISED TRAFFIC ISLAND
SECTION A (1 / -)
NOT TO SCALE

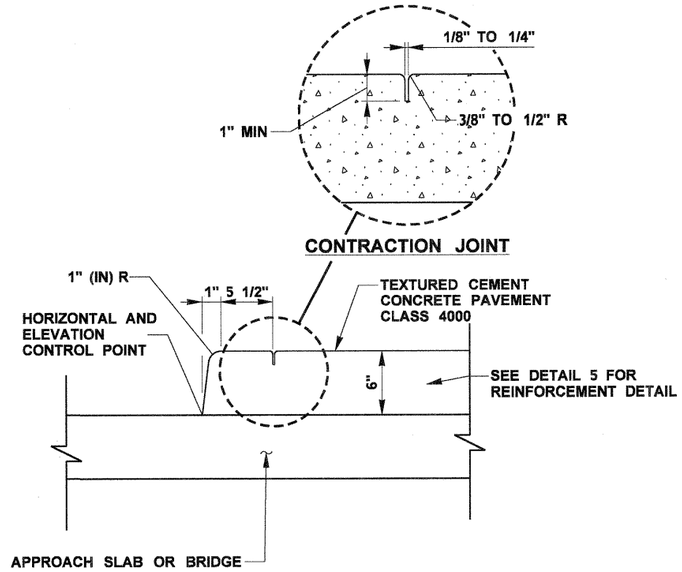

RAISED TRAFFIC ISLAND
OVER BRIDGE DECK OR APPROACH SLAB
SECTION B (2 / -)
NOT TO SCALE

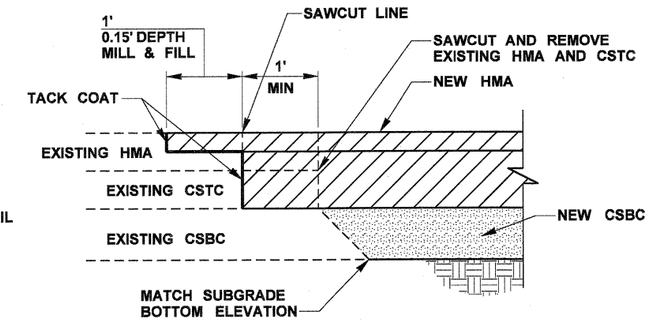

HMA WIDENING
DETAIL (3 / -)
NOT TO SCALE

NOTES:

1. SAWCUT EXISTING HMA WHERE REQUIRED TO PROVIDE VERTICAL EDGE.
2. MAINTAIN EXISTING CSBC UNDER EXISTING PAVEMENT. DO NOT ALLOW COURSE TO SLOUGH AND UNDERMINE.

LEGEND:

CSTC	CRUSHED SURFACING TOP COURSE
CSBC	CRUSHED SURFACING BASE COURSE
HMA	HOT MIXED ASPHALT

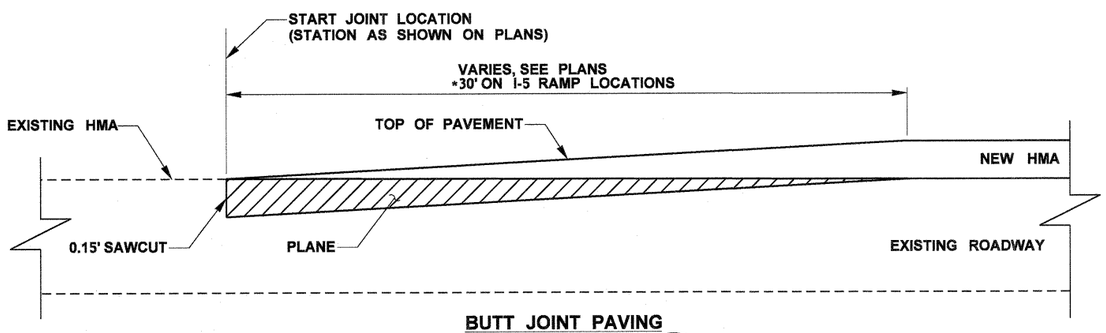

BUTT JOINT PAVING
DETAIL (4 / -)
NOT TO SCALE

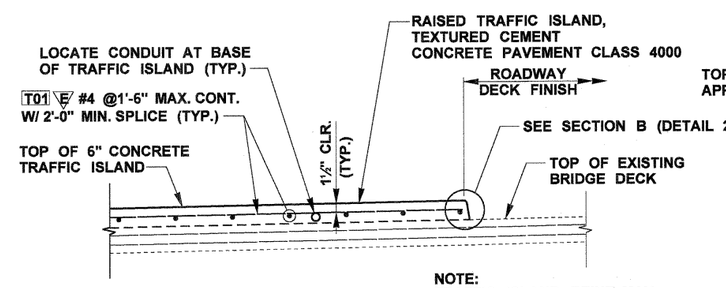

NOTE:
TRAFFIC ISLAND REINF. MAY BE SHIFTED TO CLEAR ITS, SIGNAL, & ILLUMINATION ELEC. CONDUIT AND JUNCTION BOXES.

DETAIL (5 / -)
NOT TO SCALE

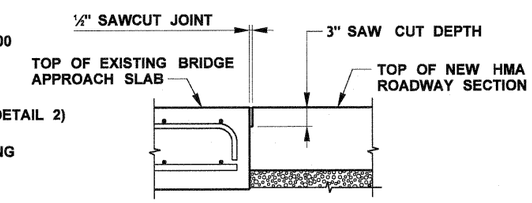

NOTE:
SAWCUT SHALL BE FILLED WITH HOT-POURED COMPONENT IN ACCORDANCE WITH STANDARD SPECIFICATION SECTION 9-04.2(1) AND SEALED IN ACCORDANCE WITH STANDARD SPECIFICATION SECTION 5-05.3(8)B.

HMA ROADWAY JOINT
DETAIL (6 / -)
NOT TO SCALE

FILE NAME	U:\PSO\Projects\Clients\1598-TulalipTribes\554-1598-095 116th-Ph4-PSE\99Svcs\CADD\DGN\PS&ESheets\BL1598033_DE_PD.dgn
TIME	11:45:32 AM
DATE	8/25/2017
PLOTTED BY	purgabut
DESIGNED BY	M. TSUN
ENTERED BY	B. PURGANAN
CHECKED BY	D. PROCTOR
APPROVED BY	H. LONGFELLOW

REVISION	DATE	BY

REGION NO.	STATE	FED.AID PROJ.NO.
10	WASH	
JOB NUMBER		
CONTRACT NO.		LOCATION NO.

P.E. STAMP BOX — DATE

HARRY DAVID LONGFELLOW — STATE OF WASHINGTON — 37902 — REGISTERED PROFESSIONAL ENGINEER

P.E. STAMP BOX — DATE

TULALIP TRIBES — Parametrix

I-5 / 116TH STREET NE
INTERCHANGE IMPROVEMENTS
PHASE 4 RAMPS

PAVING DETAILS

Plot 3
PLAN REF NO PD3
SHEET 126 OF 238 SHEETS

CEMENT CONCRETE TRAFFIC ISLANDS			
STD ITEM #	ITEM	UNIT	QUANTITY
4147	EPOXY-COATED ST. REINF. BAR	LB.	10868
4202	CONC. CLASS 4000 FOR TRAFFIC ISLAND	C.Y.	49
	TEXTURED CEMENT CONC PAVEMENT CLASS 4000	C.Y.	277

NOTES:

1. ALL SIDEWALK RAMPS SHALL MEET CURRENT ADA REQUIREMENTS. SEE WSDOT PLAN F-40.15-03.
2. FOR ISLAND SECTION B, SEE SHEET PD3, DETAIL 2
3. PRIOR TO INSTALLING POST MOUNTED SIGNS ON CONC. TRAFFIC ISLAND, SEE SHEET SN6 FOR POST MOUNTING DETAIL.

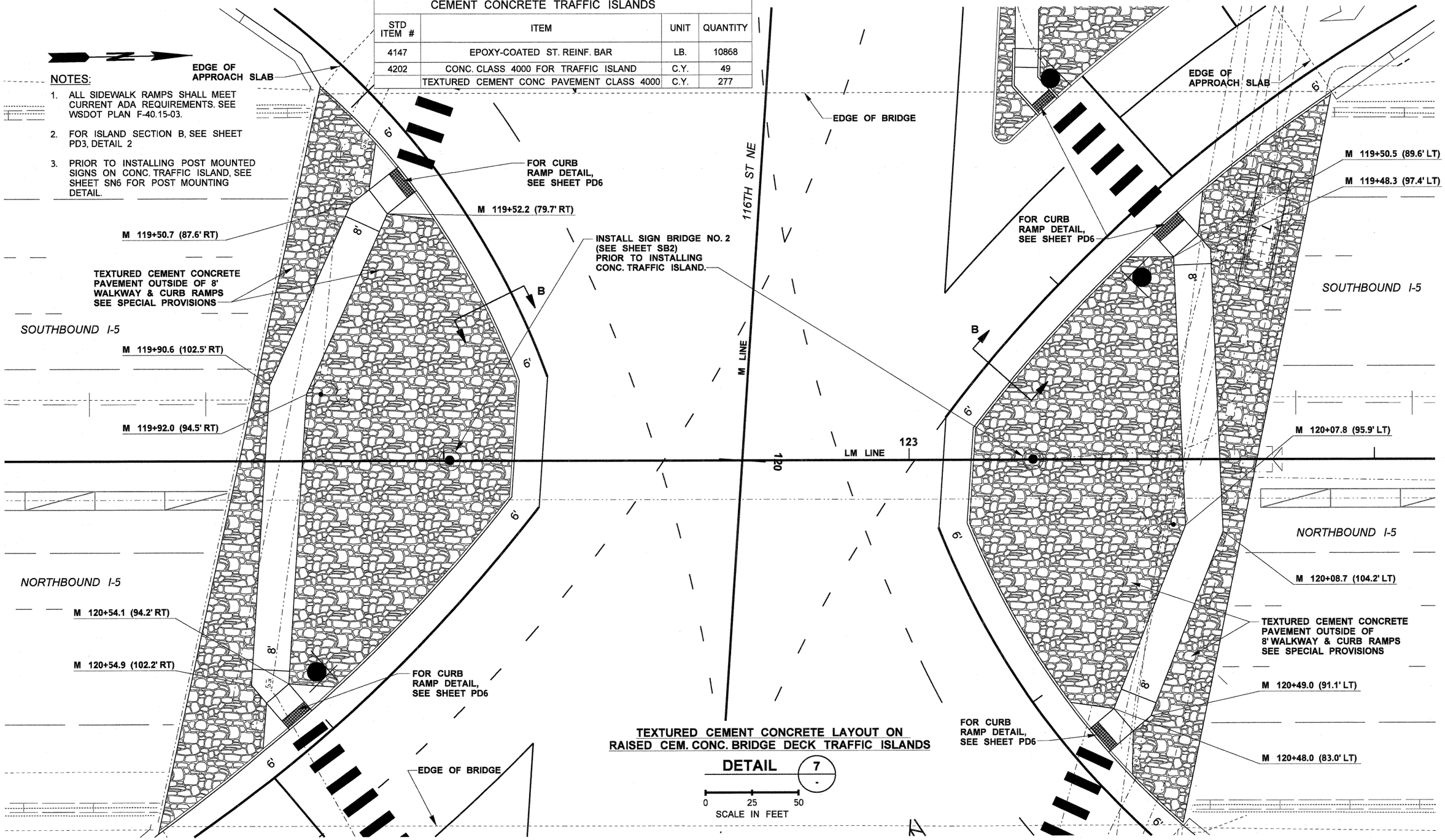

TEXTURED CEMENT CONCRETE LAYOUT ON RAISED CEM. CONC. BRIDGE DECK TRAFFIC ISLANDS

DETAIL 7

0 25 50
SCALE IN FEET

FILE NAME	U:\PSO\Projects\Clients\1598-TulalipTribes\554-1598-095 116th-Ph4-PSE\99Svcs\CADD\DGN\PS&ESheets\BL1598033_DE_PD2.dgn
TIME	11:46:01 AM
DATE	8/25/2017
PLOTTED BY	purgabut
DESIGNED BY	M. TSUN
ENTERED BY	B. PURGANAN
CHECKED BY	D. PROCTOR
APPROVED BY	H. LONGFELLOW

REVISION	DATE	BY

REGION NO.	STATE	FED.AID PROJ.NO.
10	WASH	
JOB NUMBER		
CONTRACT NO.		LOCATION NO.

P.E. STAMP BOX DATE

P.E. STAMP BOX DATE

TULALIP TRIBES
Parametrix

I-5 / 116TH STREET NE
INTERCHANGE IMPROVEMENTS
PHASE 4 RAMPS

PAVING DETAILS

Plot 3
PLAN REF NO
PD4
SHEET 127 OF 238 SHEETS

TANGENT	BEARING	LENGTH
B1	N 35°29'35"E	32'
B2	N 60°23'01"E	8'
B3	S 79°47'39"E	1.7'
B4	N 33°21'36"W	32'
B5	N 26°54'17"W	8'
B6	N 26°41'44"W	8'
B7	N 29°28' 00"W	24'
B8	N 39°05'57"W	8'
B9	N 79°49'28"W	1.7'
B10	N 40°32'59"E	30'
B11	N 30°05'37"E	8'

CURVE DATA								
CURVE	P.I. STATION/OFFSET	BEARING IN	BEARING OUT	DELTA	RADIUS	TANGENT	LENGTH	DESCRIPTION
C60	ES 120+49.5 (170.6' RT)	N 42°18'02"E	N 48°14'47"E	5°56'45" RT	165'	8.6'	17.1'	FACE OF CURB
C61	SW 119+37.8 (326.3' LT)	N 34°57'55"W	N 40°03'10"W	5°05'14" LT	328'	14.6'	29.1'	FACE OF CURB

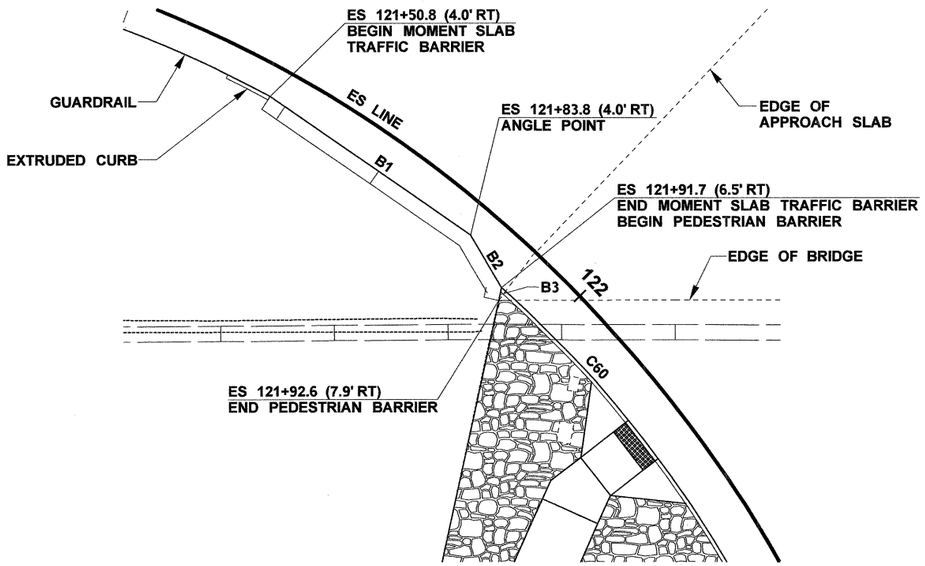

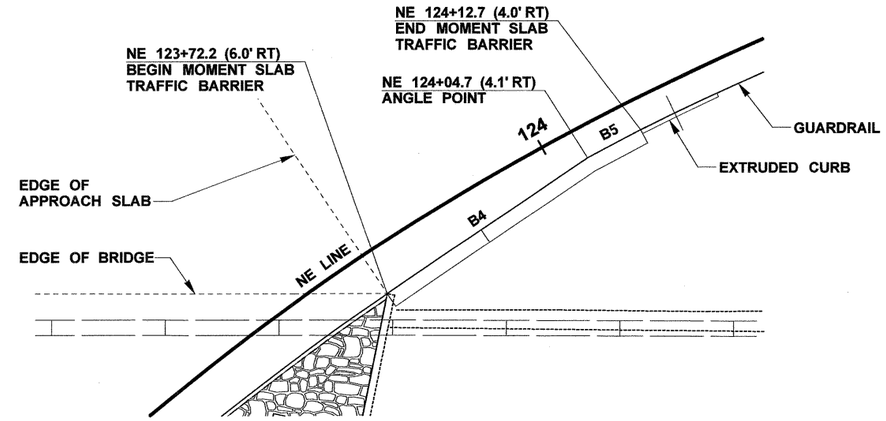

MOMENT SLAB TRAFFIC BARRIER

WEST DETAIL 8 / PV2

0 10 20
SCALE IN FEET

NOTE:

1. SEE TB SHEETS FOR BARRIER DETAILS.

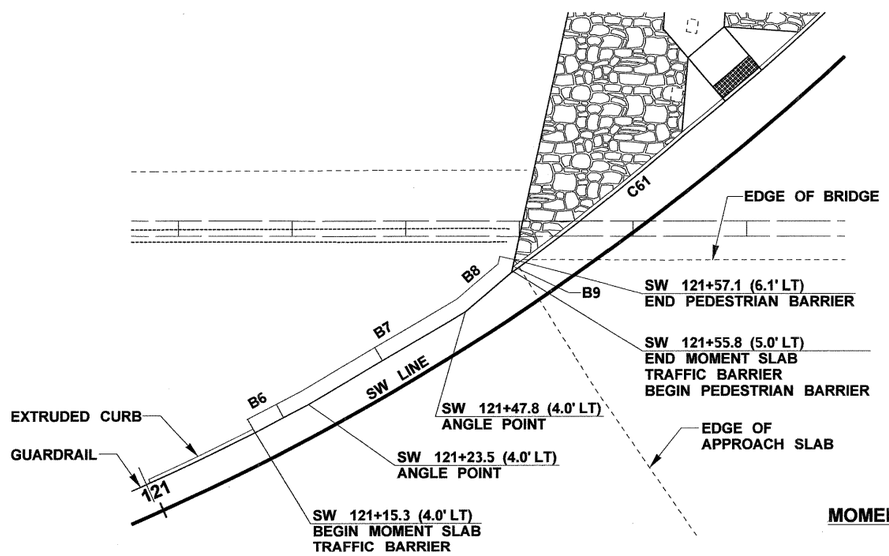

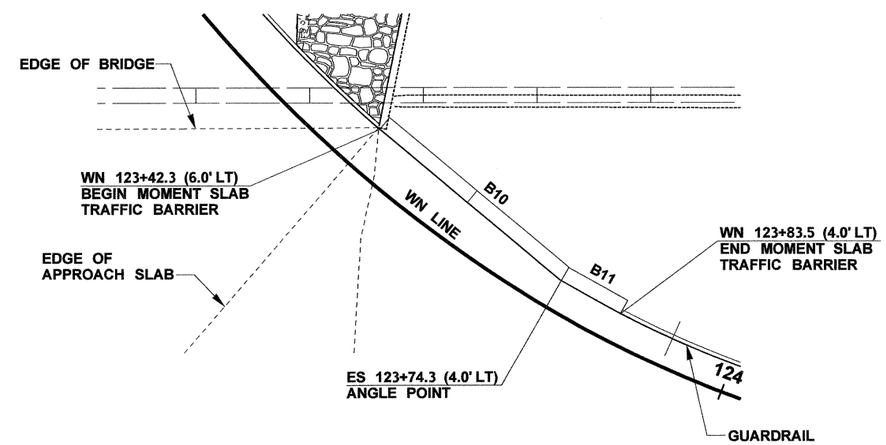

MOMENT SLAB TRAFFIC BARRIER

EAST DETAIL 9 / PV2

0 10 20
SCALE IN FEET

FILE NAME	U:\PSO\Projects\Clients\1598-TulalipTribes\554-1598-095 116th-Ph4-PSE\99Svcs\CADD\DGN\PS&ESheets\BL1598033_DE_PD2.dgn
TIME	3:13:44 PM
DATE	8/28/2017
PLOTTED BY	purgabut
DESIGNED BY	M. TSUN
ENTERED BY	B. PURGANAN
CHECKED BY	D. PROCTOR
PROJ. ENGR.	H. LONGFELLOW
REGIONAL ADM.	

REVISION	DATE	BY

REGION NO.	STATE	FED.AID PROJ.NO.
10	WASH	
JOB NUMBER		
CONTRACT NO.		LOCATION NO.

DATE
P.E. STAMP BOX

HENRY DAVID LONGFELLOW · STATE OF WASHINGTON · 37902 · REGISTERED PROFESSIONAL ENGINEER

DATE
P.E. STAMP BOX

TULALIP TRIBES
Parametrix ©

I-5 / 116TH STREET NE
INTERCHANGE IMPROVEMENTS
PHASE 4 RAMPS

PAVING DETAILS

Plot 4
PLAN REF NO
PD5
SHEET 128 OF 238 SHEETS

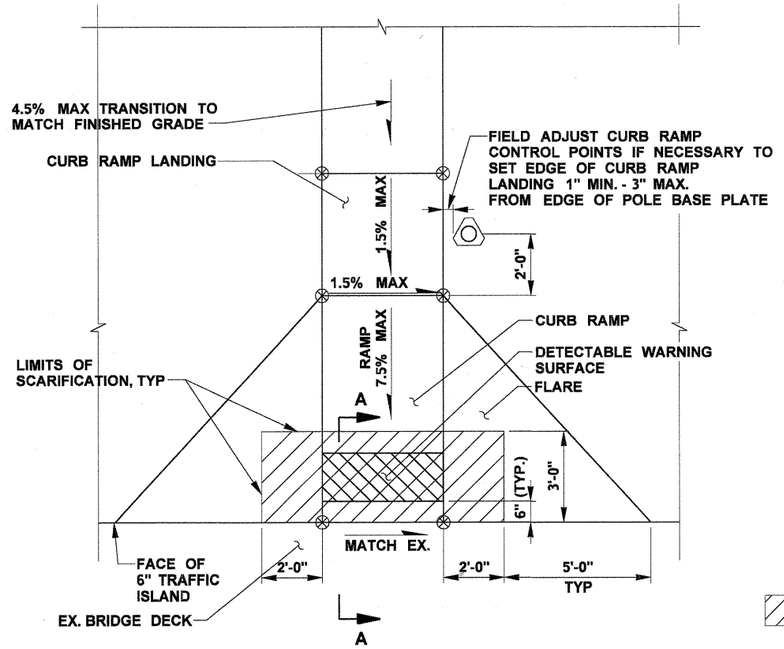

CURB RAMP SCARIFICATION - TYPE A

DETAIL 10
NOT TO SCALE -

(SEE SHEETS PC3-PC6 FOR LOCATION-SPECIFIC CURB RAMP DETAILS)

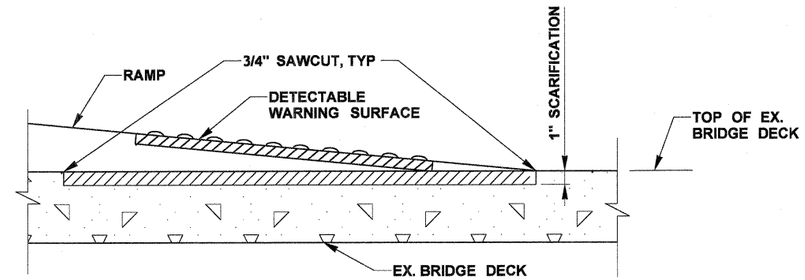

SECTION A-A

NOT TO SCALE

LEGEND

- BRIDGE DECK / APPROACH SLAB SCARIFICATION AREA
- DETECTABLE WARNING SURFACE AREA SEE CURB RAMP DETAILS ON SHEETS PC3-PC6
- ⊗ CURB RAMP CONTROL POINT SEE CURB RAMP DETAILS ON SHEETS PC3-PC6

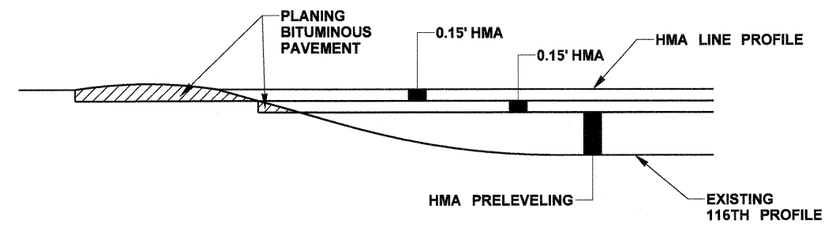

M LINE PROFILE PLANING SCHEMATIC

DETAIL 12
NOT TO SCALE -

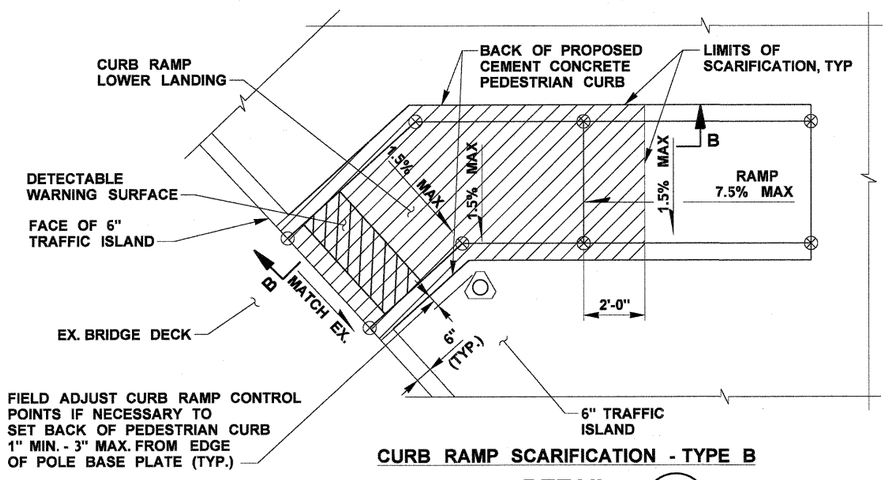

CURB RAMP SCARIFICATION - TYPE B

DETAIL 11
NOT TO SCALE -

(SEE SHEETS PC3-PC6 FOR LOCATION-SPECIFIC CURB RAMP DETAILS)

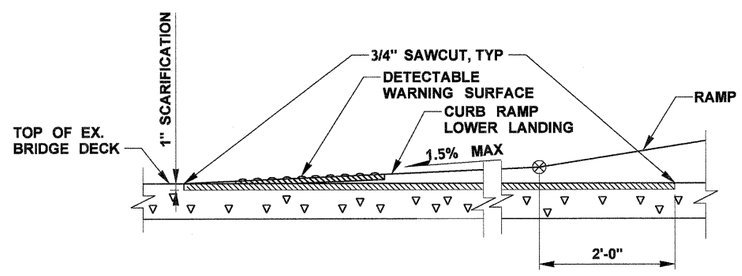

SECTION B-B

NOT TO SCALE

FILE NAME	U:\PSO\Projects\Clients\1598-TulalipTribes\554-1598-095 116th-Ph4-PSE\99Svcs\CADD\DGN\PS&ESheets\BL1598033_DE_PD2.dgn						
TIME	11:46:23 AM				REGION NO.	STATE	FED.AID PROJ.NO.
DATE	8/25/2017				10	WASH	
PLOTTED BY	purgabut				JOB NUMBER		
DESIGNED BY	M. TSUN						
ENTERED BY	B. PURGANAN				CONTRACT NO.		LOCATION NO.
CHECKED BY	D. PROCTOR						
PROJ. ENGR.	H. LONGFELLOW						
REGIONAL ADM.		REVISION	DATE	BY			

DATE
P.E. STAMP BOX

STEPHEN DAVID LONGFELLOW STATE OF WASHINGTON 37902 REGISTERED PROFESSIONAL ENGINEER

DATE
P.E. STAMP BOX

TULALIP TRIBES
Parametrix

I-5 / 116TH STREET NE
INTERCHANGE IMPROVEMENTS
PHASE 4 RAMPS

PAVING DETAILS

Plot 5
PLAN REF NO
PD6
SHEET 129 OF 238 SHEETS

LOCATION	STATION & OFFSET	ELEVATION	DESCRIPTION
S1	ES 120+74.4 (51.1' LT)	82.01	CURVE PC, EOP
S2	ES 120+92.1 (54.9' LT)	83.45'	CURVE MIDPOINT, EOP
S3	ES 121+10.4 (58.9' LT)	84.89'	CURVE PCC, EOP
S4	WS 121+47.2 (38.9' LT)	87.20'	CURVE MIDPOINT, EOP
S5	WS 122+12.0 (38.1' LT)	88.29'	CURVE PCC, EOP
S6	M 117+72.7 (68.2' RT)	87.31'	CURVE MIDPOINT, EOP
S7	M 117+37.1 (61.0' RT)	86.44'	CURVE PT, EOP
S8	WS 121+62.2 (4.00' RT)	88.75'	CURVE PC, FLOWLINE
S9	WS 121+87.0 (4.5' RT)	89.26'	CURVE MIDPOINT, FLOWLINE
S10	RAMP - SEE DETAIL 1 ON SHEET PC3		
S11	WS 122+11.5 (5.0' RT)	89.16'	CURVE PT, FLOWLINE
S12	M 118+29.4 (49.1' RT)	89.15'	FLOWLINE
S13	M 118+61.5 (48.1' RT)	89.87'	MIDPOINT, FLOWLINE
S14	M 118+93.7 (47.1' RT)	90.34'	FLOWLINE
S15	ES 122+03.8 (45.7' LT)	90.36'	CURVE PT, FLOWLINE
S16	RAMP - SEE DETAIL 2 ON SHEET PC3		
S17	ES 121+82.4 (47.0' LT)	89.84'	CURVE MIDPOINT, EOP
S18	ES 121+61.2 (47.6' LT)	88.77'	CURVE PC, FLOWLINE

LOCATION	STATION & OFFSET	ELEVATION	DESCRIPTION
S19	M 118+09.0 (47.0' LT)	88.80'	FLOWLINE
S20	NW 123+05.5 (4.0' RT)	88.73'	CURVE PC, FLOWLINE
S21	RAMP - SEE DETAIL 3 ON SHEET PC4		
S22	NW 123+55.8 (4.6' RT)	88.88'	CURVE MIDPOINT, FLOWLINE
S23	NW 124+05.9 (5.0' RT)	88.26'	CURVE PT, FLOWLINE
S24	NW 124+10.7 (5.0' RT)	88.21'	FLOWLINE
S25	NE 124+23.0 (29.0' LT)	87.93'	CURVE PT, FLOWLINE
S26	NE 123+68.5 (29.0' LT)	89.27'	CURVE MIDPOINT, FLOWLINE
S27	RAMP - SEE DETAIL 4 ON SHEET PC4		
S28	NE 123+14.1 (29.0' LT)	90.65'	CURVE PC, FLOWLINE
S29	M 119+26.3 (48.9' LT)	90.71'	FLOWLINE
S30	M 118+70.6 (48.0' LT)	89.96'	MIDPOINT, FLOWLINE
S31	M 116+24.1 (61.0' LT)	82.63'	FLOWLINE
S32	M 116+92.9 (69.6' LT)	84.95'	MIDPOINT, FLOWLINE
S33	M 117+61.8 (77.3' LT)	87.07'	CURVE PC, FLOWLINE
S34	NW 123+56.2 (34.6' LT)	88.09'	CURVE MIDPOINT, FLOWLINE
S35	NW 124+27.1 (21.9' LT)	87.22'	CURVE PT, FLOWLINE

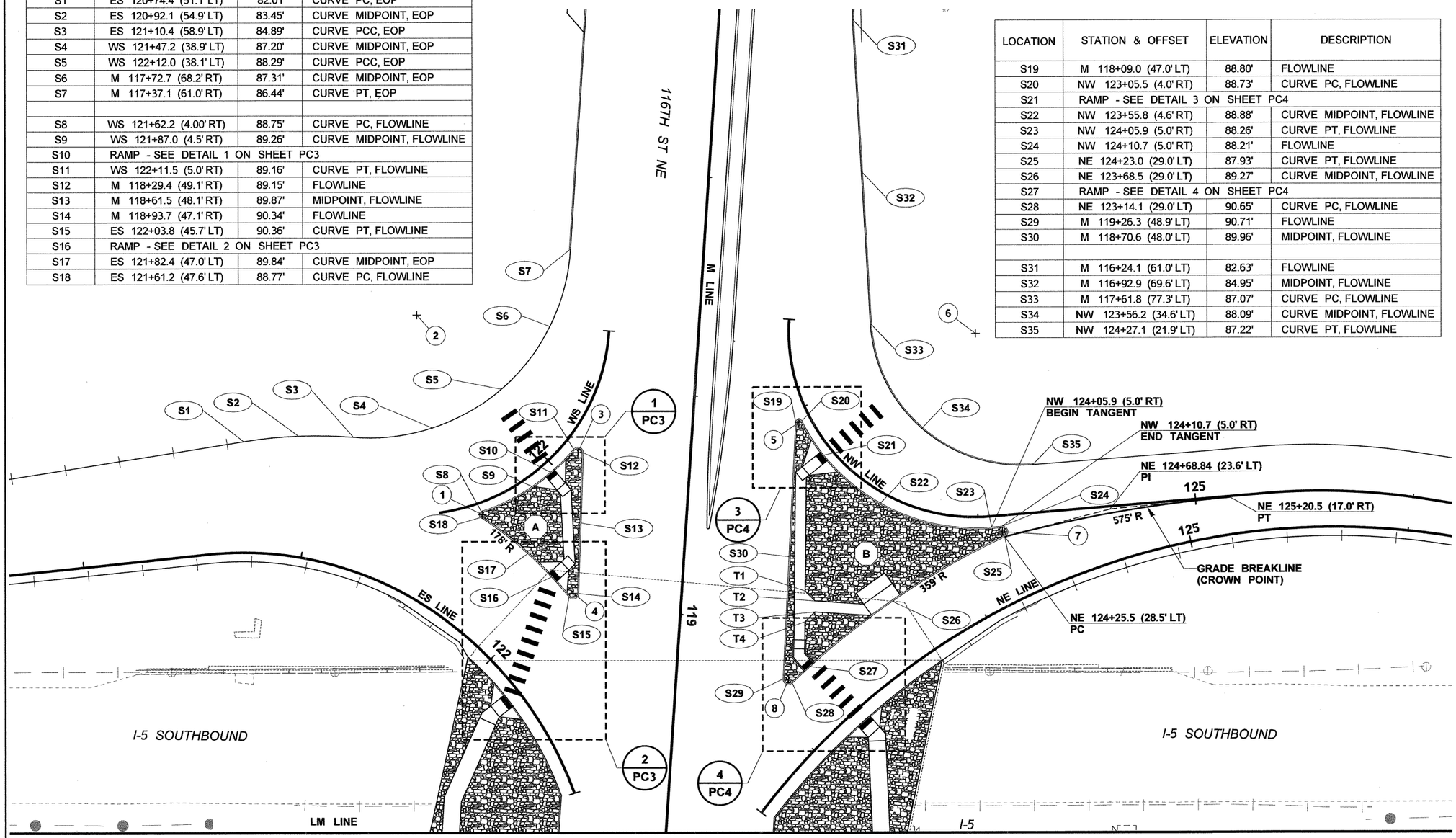

DETAIL 1 / -

0 25 50
SCALE IN FEET

LOCATION	STATION & OFFSET	DESCRIPTION
T1	M 118+85.6 (56.4' LT)	ANGLE PT.
T2	M 118+89.9 (61.2' LT)	ANGLE PT.
T3	M 118+94.9 (61.5' LT)	ANGLE PT.
T4	M 118+99.6 (57.2' LT)	ANGLE PT.

FILE NAME	U:\PSO\Projects\Clients\1598-TulalipTribes\554-1598-095 116th-Ph4-PSE\99Svcs\CADD\DGN\PS&ESheets\BL1598033_DE_PC.dgn
TIME	1:45:22 PM
DATE	8/28/2017
PLOTTED BY	purgabut
DESIGNED BY	M. TSUN
ENTERED BY	B. PURGANAN
CHECKED BY	S. OLLING
APPROVED BY	H. LONGFELLOW

REVISION | DATE | BY

REGION NO. 10 | STATE WASH | FED.AID PROJ.NO.
JOB NUMBER
CONTRACT NO. | LOCATION NO.

P.E. STAMP BOX — DATE

HENRY DAVID LONGFELLOW — STATE OF WASHINGTON — 37902 — REGISTERED PROFESSIONAL ENGINEER — 8/28/17
P.E. STAMP BOX — DATE

TULALIP TRIBES — Parametrix

I-5 / 116TH STREET NE INTERCHANGE IMPROVEMENTS PHASE 4 RAMPS

PAVING CONTROL

Plot 1
PLAN REF NO PC1
SHEET 130 OF 238 SHEETS

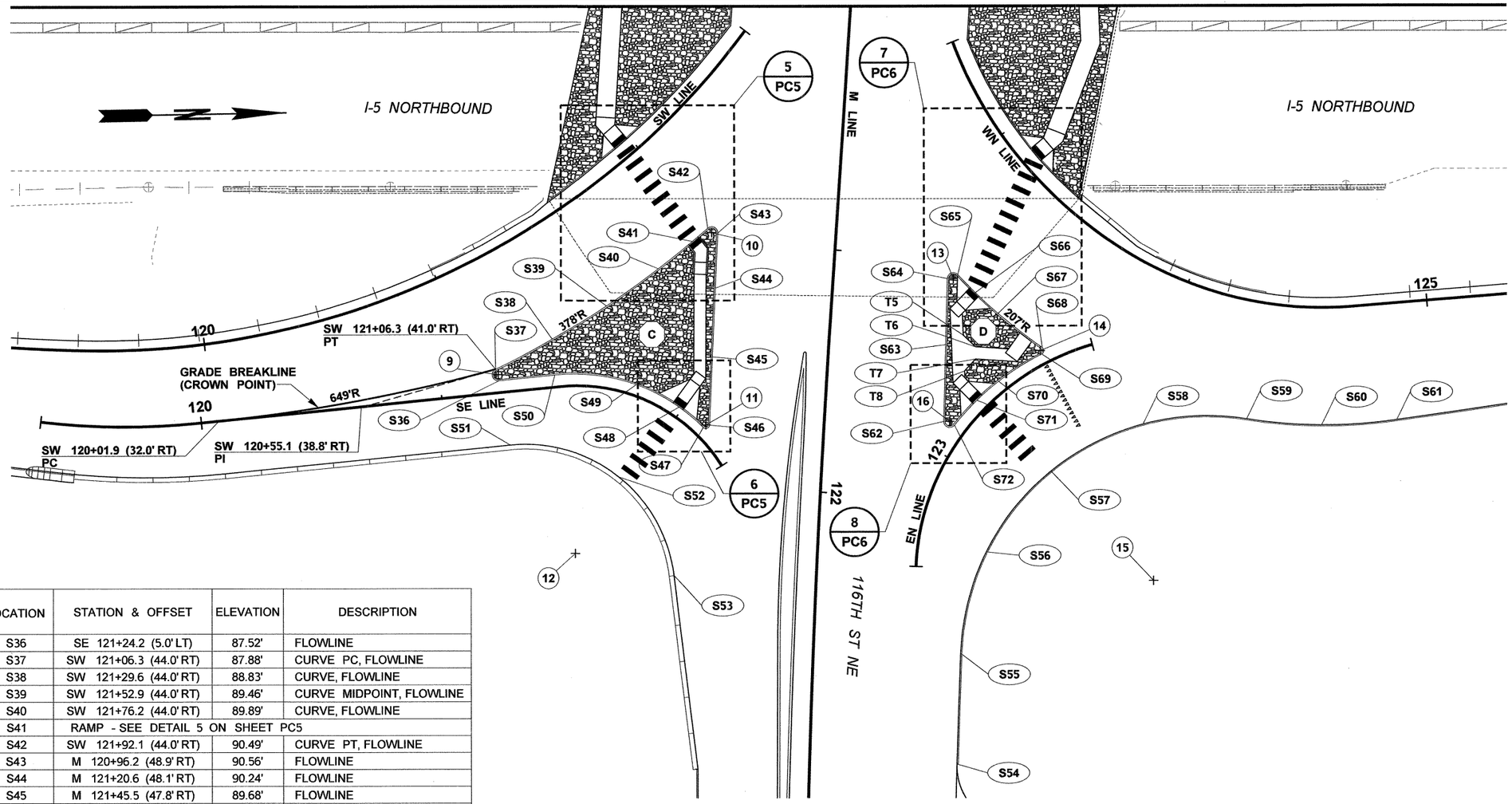

DETAIL 1 / -

LOCATION	STATION & OFFSET	ELEVATION	DESCRIPTION
S36	SE 121+24.2 (5.0' LT)	87.52'	FLOWLINE
S37	SW 121+06.3 (44.0' RT)	87.88'	CURVE PC, FLOWLINE
S38	SW 121+29.6 (44.0' RT)	88.83'	CURVE, FLOWLINE
S39	SW 121+52.9 (44.0' RT)	89.46'	CURVE MIDPOINT, FLOWLINE
S40	SW 121+76.2 (44.0' RT)	89.89'	CURVE, FLOWLINE
S41	RAMP - SEE DETAIL 5 ON SHEET PC5		
S42	SW 121+92.1 (44.0' RT)	90.49'	CURVE PT, FLOWLINE
S43	M 120+96.2 (48.9' RT)	90.56'	FLOWLINE
S44	M 121+20.6 (48.1' RT)	90.24'	FLOWLINE
S45	M 121+45.5 (47.8' RT)	89.68'	FLOWLINE
S46	M 121+74.7 (47.3' RT)	89.07'	FLOWLINE
S47	SE 122+11.0 (4.1' LT)	88.91'	CURVE PT, FLOWLINE
S48	RAMP - SEE DETAIL 6 ON SHEET PC5		
S49	SE 121+79.7 (4.5' LT)	88.72'	CURVE MIDPOINT, FLOWLINE
S50	SE 121+48.5 (5.0' LT)	88.20'	CURVE PC, FLOWLINE
S51	SE 121+26.3 (22.0' RT)	87.04'	CURVE PC
S52	SE 121+90.5 (33.6' RT)	88.06'	CURVE MIDPOINT
S53	M 122+37.1 (58.8' RT)	87.61'	CURVE PT
S54	M 123+10.4 (61.0' LT)	85.19'	FLOWLINE
S55	M 122+63.9 (60.1' LT)	86.79'	CURVE PC, FLOWLINE
S56	EN 122+62.6 (28.5' RT)	87.89'	CURVE, FLOWLINE
S57	EN 123+26.4 (37.7' RT)	88.84'	CURVE MIDPOINT, FLOWLINE
S58	WN 124+02.5 (51.4' RT)	88.00'	CURVE, FLOWLINE
S59	WN 124+32.8 (40.1' RT)	86.85'	CURVE PCC, FLOWLINE
S60	WN 124+56.6 (40.2' RT)	85.81'	CURVE MIDPOINT, FLOWLINE
S61	WN 124+83.2 (39.8' RT)	84.77'	CURVE PT, FLOWLINE

LOCATION	STATION & OFFSET	ELEVATION	DESCRIPTION
S62	M 121+67.6 (49.4' LT)	89.47'	FLOWLINE
S63	M 121+35.8 (48.3' LT)	90.00'	MIDPOINT, FLOWLINE
S64	M 121+08.7 (47.2' LT)	90.53'	FLOWLINE
S65	WN 123+28.7 (51.3' RT)	90.39'	CURVE PC, FLOWLINE
S66	RAMP - SEE DETAIL 7 ON SHEET PC6		
S67	WN 123+46.6 (51.7' RT)	89.93'	CURVE MIDPOINT, FLOWLINE
S68	WN 123+64.4 (52.0' RT)	89.40'	CURVE PT, FLOWLINE
S69	EN 123+54.2 (4.1' LT)	89.47'	CURVE PT, FLOWLINE
S70	EN 123+37.0 (4.5' LT)	89.67'	CURVE MIDPOINT, FLOWLINE
S71	RAMP - SEE DETAIL 8 ON SHEET PC6		
S72	EN 123+12.4 (5.0' LT)	89.64'	CURVE PC, FLOWLINE

LOCATION	STATION & OFFSET	DESCRIPTION
T5	M 121+31.5 (55.2' LT)	ANGLE PT.
T6	M 121+35.8 (60.5' LT)	ANGLE PT.
T7	M 121+40.8 (61.0' LT)	ANGLE PT.
T8	M 121+46.1 (56.8' LT)	ANGLE PT.

FILE NAME	U:\PSO\Projects\Clients\1598-TulalipTribes\554-1598-095 116th-Ph4-PSE\99Svcs\CADD\DGN\PS&ESheets\BL1598033_DE_PC.dgn
TIME	1:45:47 PM
DATE	8/28/2017
PLOTTED BY	purgabut
DESIGNED BY	M. TSUN
ENTERED BY	B. PURGANAN
CHECKED BY	S. OLLING
APPROVED BY	H. LONGFELLOW

REVISION	DATE	BY

REGION NO.	STATE	FED.AID PROJ.NO.
10	WASH	
JOB NUMBER		
CONTRACT NO.		LOCATION NO.

P.E. STAMP BOX — DATE

HARRY DAVID LONGFELLOW — STATE OF WASHINGTON — 23902 — REGISTERED PROFESSIONAL ENGINEER — 8/5/17

P.E. STAMP BOX — DATE

TULALIP TRIBES — Parametrix

I-5 / 116TH STREET NE INTERCHANGE IMPROVEMENTS PHASE 4 RAMPS

PAVING CONTROL

Plot 2

PLAN REF NO PC2

SHEET 131 OF 238 SHEETS

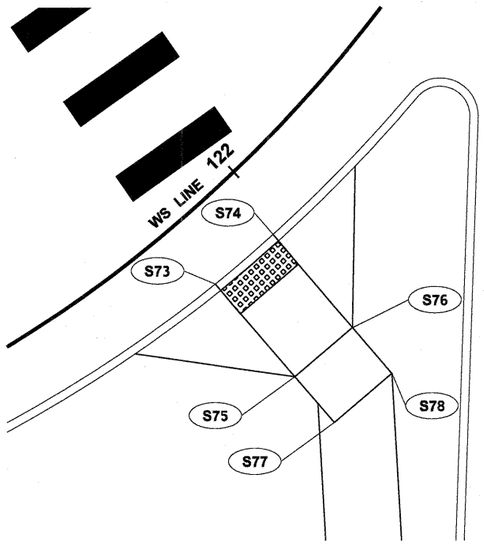

DETAIL 1 / PC1

0 5 10
SCALE IN FEET

LOCATION	STATION & OFFSET	ELEVATION	DESCRIPTION
S73	WS 121+94.36 (4.65' RT)	89.28'	RAMP AT FLOWLINE
S74	WS 121+99.12 (4.75' RT)	89.25'	RAMP AT FLOWLINE
S75	WS 121+94.44 (12.73' RT)	89.84'	BACK OF RAMP / LANDING
S76	WS 121+98.82 (12.80' RT)	89.83'	BACK OF RAMP / LANDING
S77	WS 121+94.64 (16.73' RT)	89.89'	LANDING
S78	WS 121+98.70 (16.79' RT)	89.89'	LANDING
S79	ES 122+16.76 (6.00' RT)	EX. 90.30'	RAMP AT FLOWLINE
S80	ES 122+23.40 (6.00' RT)	EX. 90.39'	RAMP AT FLOWLINE
S81	ES 122+16.66 (13.99' RT)	90.72'	BACK OF RAMP / LANDING
S82	ES 122+23.63 (13.98' RT)	90.81'	BACK OF RAMP / LANDING
S83	ES 122+16.56 (18.99' RT)	90.69'	LANDING
S84	ES 122+17.98 (21.42' RT)	90.67'	LANDING
S85	ES 122+25.89 (17.55' RT)	90.79'	LANDING
S86	ES 121+92.72 (46.46' LT)	EX. 89.96'	RAMP AT FLOWLINE
S87	ES 121+96.64 (46.20' LT)	EX. 90.07'	RAMP AT FLOWLINE
S88	ES 121+93.09 (54.50' LT)	90.53'	BACK OF RAMP / LANDING
S89	ES 121+96.88 (54.26' LT)	90.60'	BACK OF RAMP / LANDING
S90	ES 121+93.26 (58.49' LT)	90.58'	LANDING
S91	ES 121+96.98 (58.26' LT)	90.60'	LANDING

NOTES:

1. RAMP GRADING POINTS REPRESENT ONE METHOD TO MEET APPLICABLE STANDARD PLAN. IT IS THE RESPONSIBILITY OF THE CONTRACTOR TO MAKE FIELD ADJUSMENTS AS NECESSARY TO ENSURE RAMPS MEET ALL ADA REQUIREMENTS. SEE MEF DOCUMENTATION FOR ELEMENTS THAT WILL NOT MEET ADA REQUIREMENTS DUE TO EXISTING CONSTRAINTS.
2. SEE SHEET PD6 FOR ADDITIONAL RAMP CONSTRUCTION DETAILS.

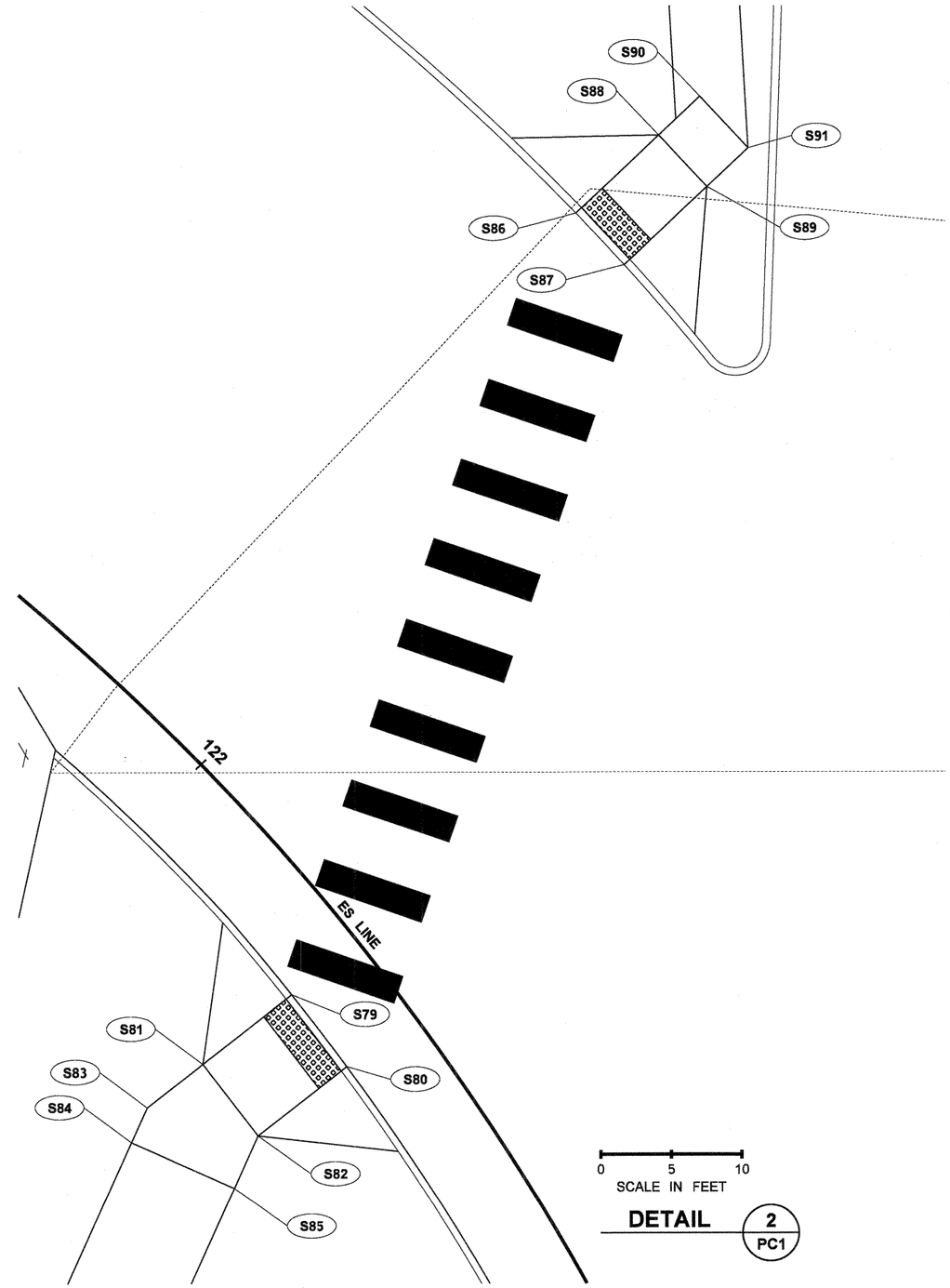

0 5 10
SCALE IN FEET

DETAIL 2 / PC1

FILE NAME	U:\PSO\Projects\Clients\1598-TulalipTribes\554-1598-095 116th-Ph4-PSE\99Svcs\CADD\DGN\PS&ESheets\BL1598033_DE_PC.dgn
TIME	11:48:06 AM
DATE	8/25/2017
PLOTTED BY	purgabut
DESIGNED BY	M. TSUN
ENTERED BY	B. PURGANAN
CHECKED BY	S. OLLING
APPROVED BY	H. LONGFELLOW

REVISION	DATE	BY

REGION NO.	STATE	FED.AID PROJ.NO.
10	WASH	
JOB NUMBER		
CONTRACT NO.		LOCATION NO.

P.E. STAMP BOX — DATE

HARRY DAVID LONGFELLOW — STATE OF WASHINGTON — 37902 — REGISTERED PROFESSIONAL ENGINEER — DATE — P.E. STAMP BOX

TULALIP TRIBES — Parametrix

I-5 / 116TH STREET NE
INTERCHANGE IMPROVEMENTS
PHASE 4 RAMPS

PAVING CONTROL

Plot 3
PLAN REF NO PC3
SHEET 132 OF 238 SHEETS

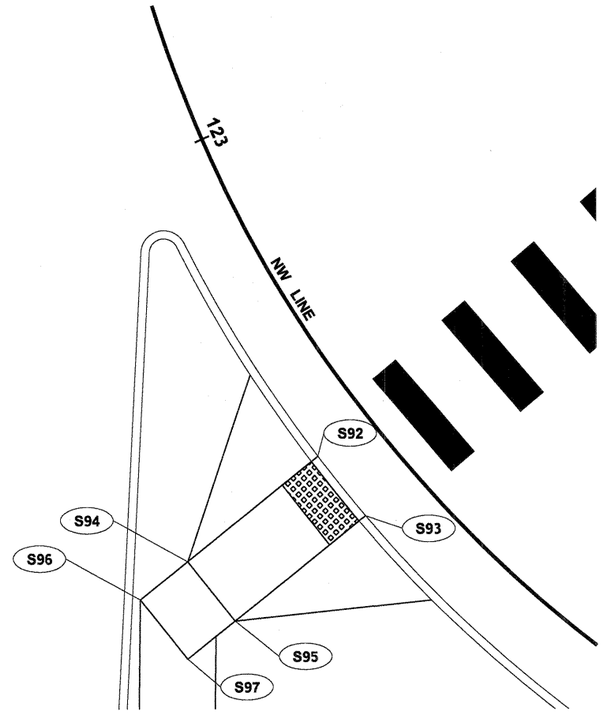

DETAIL 3 / PC1

0 5 10
SCALE IN FEET

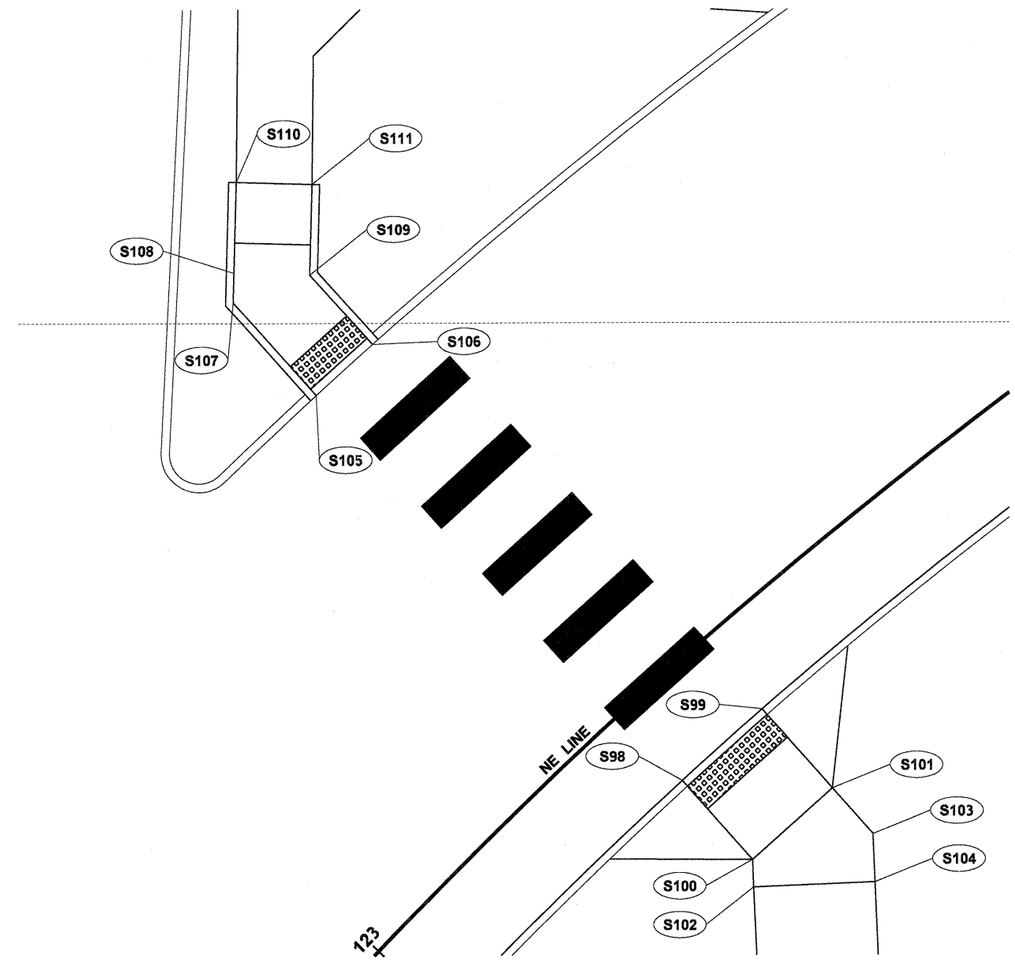

DETAIL 4 / PC1

0 5 10
SCALE IN FEET

LOCATION	STATION & OFFSET	ELEVATION	DESCRIPTION
S92	NW 123+21.39 (4.20' RT)	88.82'	RAMP AT FLOWLINE
S93	NW 123+26.15 (4.26' RT)	88.86'	RAMP AT FLOWLINE
S94	NW 123+21.48 (15.20' RT)	89.62'	BACK OF RAMP / LANDING
S95	NW 123+25.72 (15.28' RT)	89.65'	BACK OF RAMP / LANDING
S96	NW 123+21.51 (19.20' RT)	89.67'	LANDING
S97	NW 123+25.59 (19.28' RT)	89.70'	LANDING
S98	NE 123+22.36 (6.00' RT)	EX. 90.27'	RAMP AT FLOWLINE
S99	NE 123+29.54 (6.00' RT)	EX. 90.11'	RAMP AT FLOWLINE
S100	NE 123+22.27 (12.96' RT)	90.68'	BACK OF RAMP / LANDING
S101	NE 123+29.62 (12.96' RT)	90.58'	BACK OF RAMP / LANDING
S102	NE 123+21.07 (14.34' RT)	90.70'	LANDING
S103	NE 123+29.67 (16.95' RT)	90.58'	LANDING
S104	NE 123+27.57' (19.42' RT)	90.60'	LANDING
S105	NE 123+21.68 (29.00' LT)	EX. 90.46'	LANDING AT FLOWLINE
S106	NE 123+26.27 (29.00' LT)	EX. 90.34'	LANDING AT FLOWLINE
S107	NE 123+21.77 (37.20' LT)	90.49'	LANDING
S108	NE 123+23.00 (38.64' LT)	90.50'	FRONT OF RAMP / LANDING
S109	NE 123+26.26 (35.19' LT)	90.43'	FRONT OF RAMP / LANDING
S110	NE 123+26.67 (42.99' LT)	90.87'	BACK OF RAMP
S111	NE 123+29.93 (39.59' LT)	90.82'	BACK OF RAMP

NOTES:

1. RAMP GRADING POINTS REPRESENT ONE METHOD TO MEET APPLICABLE STANDARD PLAN. IT IS THE RESPONSIBILITY OF THE CONTRACTOR TO MAKE FIELD ADJUSMENTS AS NECESSARY TO ENSURE RAMPS MEET ALL ADA REQUIREMENTS. SEE MEF DOCUMENTATION FOR ELEMENTS THAT WILL NOT MEET ADA REQUIREMENTS DUE TO EXISTING CONSTRAINTS.
2. SEE SHEET PD6 FOR ADDITIONAL RAMP CONSTRUCTION DETAILS.

FILE NAME	U:\PSO\Projects\Clients\1598-TulalipTribes\554-1598-095 116th-Ph4-PSE\99Svcs\CADD\DGN\PS&ESheets\BL1598033_DE_PC.dgn
TIME	11:48:17 AM
DATE	8/25/2017
PLOTTED BY	purgabut
DESIGNED BY	M. TSUN
ENTERED BY	B. PURGANAN
CHECKED BY	S. OLLING
APPROVED BY	H. LONGFELLOW

REVISION | DATE | BY

REGION NO. 10 | STATE WASH | FED.AID PROJ.NO.

JOB NUMBER

CONTRACT NO. | LOCATION NO.

P.E. STAMP BOX — DATE

P.E. STAMP BOX — DATE

I-5 / 116TH STREET NE
INTERCHANGE IMPROVEMENTS
PHASE 4 RAMPS

PAVING CONTROL

Plot 4

PLAN REF NO PC4

SHEET 133 OF 238 SHEETS

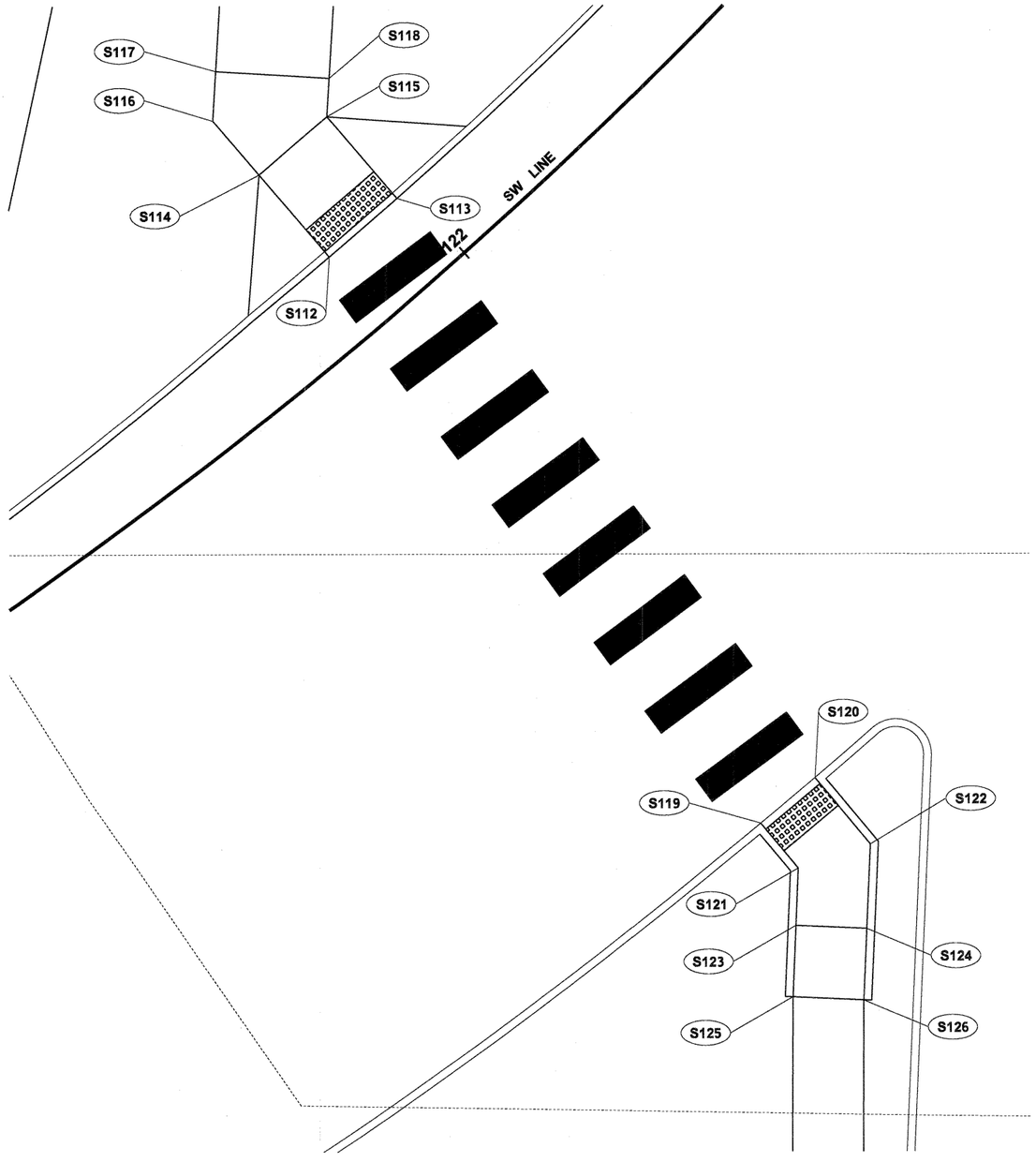

DETAIL 5 / PC2

0 5 10
SCALE IN FEET

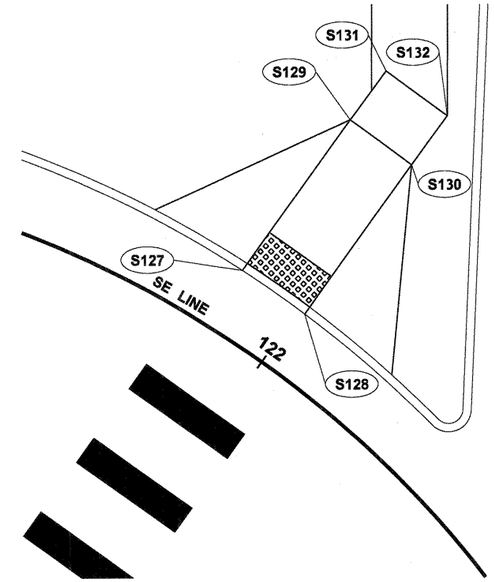

DETAIL 6 / PC2

0 5 10
SCALE IN FEET

LOCATION	STATION & OFFSET	ELEVATION	DESCRIPTION
S112	SW 121+92.56 (6.00' LT)	EX. 89.98'	RAMP AT FLOWLINE
S113	SW 121+98.97 (6.00' LT)	EX. 90.11'	RAMP AT FLOWLINE
S114	SW 121+92.50 (13.59' LT)	90.42'	BACK OF RAMP / LANDING
S115	SW 121+99.06 (13.58' LT)	90.51'	BACK OF RAMP / LANDING
S116	SW 121+92.45 (18.59' LT)	90.39'	LANDING
S117	SW 121+95.02 (21.10' LT)	90.42'	LANDING
S118	SW 122+01.04 (15.48' LT)	90.51'	LANDING
S119	SW 121+90.32 (44.00 RT)	EX. 90.24'	LANDING AT FLOWLINE
S120	SW 121+94.74 (44.00 RT)	EX. 90.37'	LANDING AT FLOWLINE
S121	SW 121+90.32 (48.13 RT)	90.29'	LANDING
S122	SW 121+94.67 (50.10 RT)	90.39'	LANDING
S123	SW 121+87.99 (51.10 RT)	90.35'	FRONT OF RAMP / LANDING
S124	SW 121+91.19 (54.45 RT)	90.42'	FRONT OF RAMP / LANDING
S125	SW 121+85.12 (54.84 RT)	90.70'	BACK OF RAMP
S126	SW 121+88.32 (58.16 RT)	90.77'	BACK OF RAMP
S127	SE 121+95.74 (4.28' LT)	88.86'	RAMP AT FLOWLINE
S128	SE 122+00.46 (4.21' LT)	88.88'	RAMP AT FLOWLINE
S129	SE 121+96.38 (16.43' LT)	89.74'	BACK OF RAMP / LANDING
S130	SE 122+00.43 (16.26' LT)	89.77'	BACK OF RAMP / LANDING
S131	SE 121+96.58 (20.42' LT)	89.80'	LANDING
S132	SE 122+00.45 (20.26' LT)	89.83'	LANDING

NOTES:

1. RAMP GRADING POINTS REPRESENT ONE METHOD TO MEET APPLICABLE STANDARD PLAN. IT IS THE RESPONSIBILITY OF THE CONTRACTOR TO MAKE FIELD ADJUSMENTS AS NECESSARY TO ENSURE RAMPS MEET ALL ADA REQUIREMENTS. SEE MEF DOCUMENTATION FOR ELEMENTS THAT WILL NOT MEET ADA REQUIREMENTS DUE TO EXISTING CONSTRAINTS.
2. SEE SHEET PD6 FOR ADDITIONAL RAMP CONSTRUCTION DETAILS.

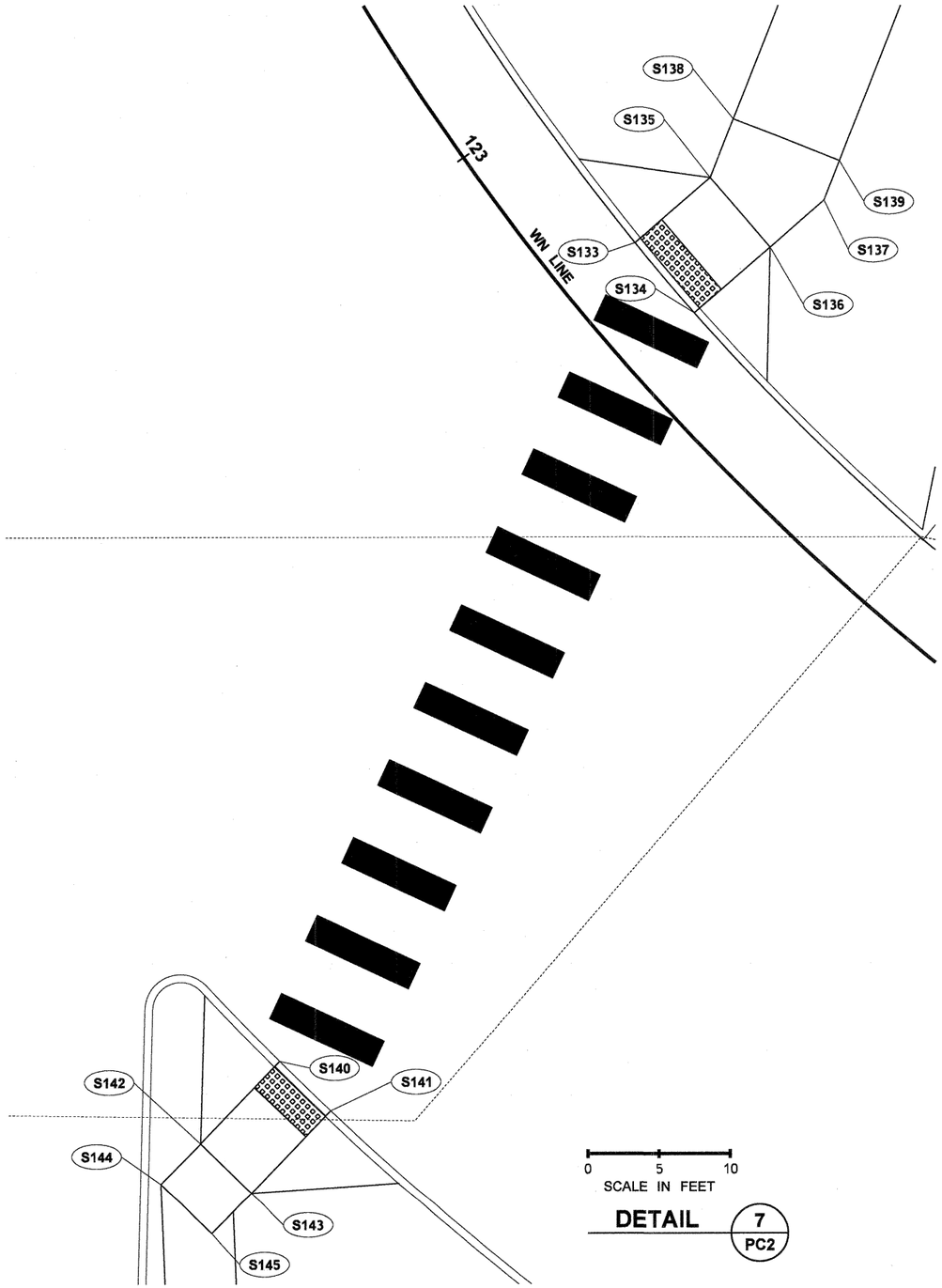

0 5 10
SCALE IN FEET

DETAIL 7 / PC2

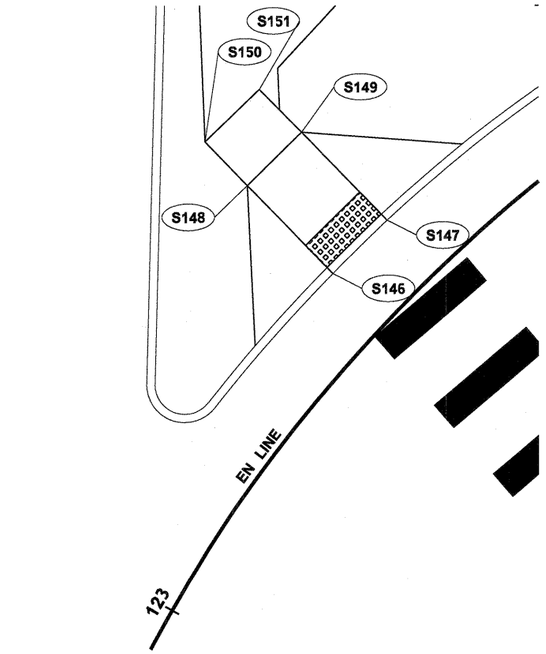

DETAIL 8 / PC2

0 5 10
SCALE IN FEET

LOCATION	STATION & OFFSET	ELEVATION	DESCRIPTION
S133	WN 123+12.22 (6.00' LT)	EX. 90.38'	RAMP AT FLOWLINE
S134	WN 123+18.86 (6.00' LT)	EX. 90.24'	RAMP AT FLOWLINE
S135	WN 123+12.03 (12.97' LT)	90.78'	BACK OF RAMP / LANDING
S136	WN 123+18.95 (13.04' LT)	90.69'	BACK OF RAMP / LANDING
S137	WN 123+19.00 (18.04' LT)	90.66'	LANDING
S138	WN 123+09.63 (16.82' LT)	90.79'	LANDING
S139	WN 123+17.47 (20.68' LT)	90.67'	LANDING
S140	WN 123+34.45 (51.44' RT)	EX. 90.22'	RAMP AT FLOWLINE
S141	WN 123+38.32 (51.55' RT)	EX. 90.10'	RAMP AT FLOWLINE
S142	WN 123+34.43 (59.48' RT)	90.74'	BACK OF RAMP / LANDING
S143	WN 123+38.17 (59.60' RT)	90.67'	BACK OF RAMP / LANDING
S144	WN 123+34.39 (63.48' RT)	90.74'	LANDING
S145	WN 123+38.07 (63.60' RT)	90.67'	LANDING
S146	EN 123+23.63 (4.77' LT)	89.69'	RAMP AT FLOWLINE
S147	EN 123+28.40 (4.63' LT)	89.69'	RAMP AT FLOWLINE
S148	EN 123+23.91 (12.82' LT)	90.23'	BACK OF RAMP / LANDING
S149	EN 123+28.34 (12.75' LT)	90.28'	BACK OF RAMP / LANDING
S150	EN 123+24.03 (16.82' LT)	90.26'	LANDING
S151	EN 123+28.31 (16.75' LT)	90.33'	LANDING

NOTES:

1. RAMP GRADING POINTS REPRESENT ONE METHOD TO MEET APPLICABLE STANDARD PLAN. IT IS THE RESPONSIBILITY OF THE CONTRACTOR TO MAKE FIELD ADJUSMENTS AS NECESSARY TO ENSURE RAMPS MEET ALL ADA REQUIREMENTS. SEE MEF DOCUMENTATION FOR ELEMENTS THAT WILL NOT MEET ADA REQUIREMENTS DUE TO EXISTING CONSTRAINTS.
2. SEE SHEET PD6 FOR ADDITIONAL RAMP CONSTRUCTION DETAILS.

FILE NAME	U:\PSO\Projects\Clients\1598-TulalipTribes\554-1598-095 116th-Ph4-PSE\99Svcs\CADD\DGN\PS&ESheets\BL1598033_DE_PC.dgn
TIME	11:48:37 AM
DATE	8/25/2017
PLOTTED BY	purgabut
DESIGNED BY	M. TSUN
ENTERED BY	B. PURGANAN
CHECKED BY	S. OLLING
APPROVED BY	H. LONGFELLOW

REVISION | DATE | BY

REGION NO. 10 | STATE WASH | FED.AID PROJ.NO.
JOB NUMBER
CONTRACT NO. | LOCATION NO.

P.E. STAMP BOX DATE

RAPPE DAVID LONGFELLOW STATE OF WASHINGTON 37903 REGISTERED PROFESSIONAL ENGINEER
P.E. STAMP BOX DATE

TULALIP TRIBES Parametrix

I-5 / 116TH STREET NE INTERCHANGE IMPROVEMENTS PHASE 4 RAMPS

PAVING CONTROL

Plot 6
PLAN REF NO PC6
SHEET 135 OF 238 SHEETS

QUANTITY TABULATION - PAVEMENT MARKINGS

NOTE:
THE FIRST NUMBER OF THE "CODE" BELOW REFERS TO THE SHEET NO. OR THE SHEET REFERENCE NO. SHOWING THE CONSTRUCTION FEATURE.

THE SECOND NUMBER REFERS TO THE CONSTRUCTION FEATURE FOUND ON THAT SHEET.

CODE	LOCATION ➢ \ UNIT OF MEASURE ➢	PLASTIC LINE	PROFILED PLASTIC LINE	PROFILED PLASTIC WIDE LANE LINE		PLASTIC WIDE LINE	PLASTIC TRAFFIC ARROW	PLASTIC CROSSWALK LINE	PLASTIC STOP LINE			PLASTIC TRAFFIC LETTER	PLASTIC DRAINAGE MARKING	PLASTIC YIELD LINE SYMBOL	RAISED PAVEMENT MARKER TYPE 2		SEE GENERAL NOTES
		L.F.	L.F.	L.F.		L.F.	EACH	S.F.	L.F.			EACH	EACH	EACH	HUND		
PM1-1	LM 209+86.2 (56.0' LT) TO LM 215+68.8 (56.0' LT)					736									0.6		12, 20
PM1-2	LM 207+27.3 (56.6' RT) TO M 126+57.8 (55.0' RT)	1949															14
PM1-3	LM 209+41.9 (56.0' RT) TO LM 213+72.5 (56.0' RT)			410		588									0.48		2, 20
PM1-4	LM 216+03.0 (56.0' LT)												1				10
PM1-5	SW 113+72.7 (0.0' RT) TO SW 121+83.3 (0' RT)		810												0.1		11, 16, 21
PM1-6	LM 206+19.0 (66.7' LT) TO M 113+38.0 (131.7' RT)	2128													0.27		11, 14, 21
PM1-7	ES 116+01.0 (17.5' LT)												1				10
PM1-8	ES 116+50.5 (20.0' LT)												1				13
PM1-9	ES 114+45.2 (12.5' LT)												1				13
PM1-10	ES 116+60.0 (14.0' LT)						1										6
PM1-11	SW 116+86.3 (7.0' RT) (21.0' RT) (34.9' RT)						3										4,5
PM1-12	SW 116+64.6 (14.0' RT) TO SW 121+83.7 (16.0' RT)		532														8, 18
PM1-13	SW 116+64.6 (28'.0 RT) TO SE 121+13.7 (0.0' RT)			460													15, 18
PM1-14	LM 209+86.2 (56.0' LT) TO ES 115+81.9 (0.0' LT)			528													12
PM1-15	NOT USED																
PM1-16	NOT USED																
PM1-17	NOT USED																
PM1-18	NOT USED																
PM1-19	NOT USED																
PM1-20	NOT USED																
PM1-21	NOT USED																
PM1-22	NOT USED																
PM1-23	SW 114+71.1 (0.0' LT)												1				10
PM1-24	SW 114+70.1 (15.0' RT)												1				10
PM1-25	ES 115+81.9 (0.0' LT) TO ES 122+08.0 (0.0' LT)		625														16
PM1-26	LM 214+74.4 (56.0' RT)												1				10
PM2-1	ES 118+56.0 (29.5' LT)												1				13
PM2-2	WS 122+51.1 (31.6' LT)												1				13
PM2-3	SE 121+09.3 (11.2' LT) TO SE 121+35.41 (20.1' LT)											7					9
PM2-4	ES117+29.3 (11.1' LT) TO ES 122+28.1 (18.2' LT)		515														8, 18
PM2-5	SW 119+24.7 (8.6' RT)(22.6' RT)(36.5' RT)						3										4,5
PM2-6	SE 121+13.7 (0.0' RT) TO SE 122+11.0 (0.0' RT)		99														16, 18
PM2-7	SW 120+02.0 (32.0' RT) TO SW 121+84.0 (32.0' RT)			200													15, 18
PM2-8	WN 126+90.7 (35.5' RT)												1				13
	SHEET TOTAL	4,077	2,581	1,598		1,324	7	0	0			7	10	0	1.45		

GENERAL NOTES:

1. SEE STANDARD PLAN M-20.10.02, DROP LANE LINE.
2. SEE STANDARD PLAN M-2.20-03, OFF-RAMP GORE AREA MARKING LAYOUTS TYPE D (MMA)
3. SEE STANDARD PLAN M-24.40-02 TYPE 1S, TYPE D (MMA) SYMBOL MARKINGS TRAFFIC ARROWS FOR LOW SPEED ROADWAYS
4. SEE STANDARD PLAN M-24.40-02 TYPE 2SL, TYPE D (MMA) SYMBOL MARKINGS TRAFFIC ARROWS FOR LOW SPEED ROADWAYS
5. SEE STANDARD PLAN M-24.40-02 TYPE 2SR, TYPE D (MMA) SYMBOL MARKINGS TRAFFIC ARROWS FOR LOW SPEED ROADWAYS
6. SEE STANDARD PLAN M-24.40-02 TYPE 6SL, TYPE D (MMA) SYMBOL MARKINGS TRAFFIC ARROWS FOR LOW SPEED ROADWAYS
7. SEE STANDARD PLAN M-15.10-01, CROSSWALK LAYOUT TYPE D (MMA)
8. SEE STANDARD PLAN M-20.10-02, LONGITUDINAL MARKING PATTERN, LANE LINE.
9. SEE STANDARD PLAN M-80.10-01, TRAFFIC LETTER AND NUMERAL APPLICATIONS TYPE D (MMA)
10. SEE STANDARD PLAN M-24.60-04, SYMBOL MARKINGS: MISCELLANEOUS TYPE D (MMA)
11. SEE STANDARD PLAN M-20.30-04, LONGITUDINAL MARKING SUPPLEMENT WITH RAISED PAVEMENT MARKERS (RPM'S) TYPE D (MMA)
12. SEE STANDARD PLAN M-2.21-00 ON-RAMP GORE AREA MARKING LAYOUTS TYPE D (MMA)
13. SEE HIGHWAY RUNOFF BMP DETAIL HR-1, BMP DELINEATION - LINEAR-TYPE TYPE D (MMA)
14. SEE STANDARD PLAN M-20.10-02, EDGE LINE (WHITE)
15. SEE STANDARD PLAN M-20.10-02, WIDE LANE LINE.
16. SEE STANDARD PLAN M-20.10-02, EDGE LINE (YELLOW).
17. SEE STANDARD PLAN M-20.10-02, DOTTED EXTENSION LINE.
18. SEE STANDARD PLAN M-20.20-02, PROFILED AND EMBOSSED PLASTIC LINES TYPE D (MMA)
19. SEE STANDARD PLAN M-24.60-04, YIELD LINE SYMBOL TYPE 1
20. RAISED PAVEMENT MARKING TYPE 2W (WHITE).
21. RAISED PAVEMENT MARKING TYPE 2Y (YELLOW).

DESIGNED BY	M. TSUN				
ENTERED BY	M. TSUN				
CHECKED BY	D. PROCTOR				
APPROVED BY	H. LONGFELLOW				
		DATE	DATE	REVISION	BY

REGION NO.	STATE	FED. AID PROJ. NO.
10	WASH	

JOB NUMBER

CONTRACT NO.

TULALIP TRIBES
Parametrix

I-5 / 116TH STREET NE
INTERCHANGE IMPROVEMENTS
PHASE 4 RAMPS

QUANTITY TABULATION - PAVEMENT MARKINGS

QTPM1

SHEET 136 OF 238 SHEETS

QUANTITY TABULATION - PAVEMENT MARKINGS

NOTE:
THE FIRST NUMBER OF THE "CODE" BELOW REFERS TO THE SHEET NO. OR THE SHEET REFERENCE NO. SHOWING THE CONSTRUCTION FEATURE.

THE SECOND NUMBER REFERS TO THE CONSTRUCTION FEATURE FOUND ON THAT SHEET.

CODE	LOCATION ➢ \ UNIT OF MEASURE ➢	PLASTIC LINE	PROFILED PLASTIC LINE	PROFILED PLASTIC WIDE LANE LINE		PLASTIC WIDE LINE	PLASTIC TRAFFIC ARROW	PLASTIC CROSSWALK LINE	PLASTIC STOP LINE			PLASTIC TRAFFIC LETTER	PLASTIC DRAINAGE MARKING	PLASTIC YIELD LINE SYMBOL	RAISED PAVEMENT MARKER TYPE 2		SEE GENERAL NOTES
		L.F.	L.F.	L.F.		L.F.	EACH	S.F.	L.F.			EACH	EACH	EACH	HUND		
PM2-9	M 120+63.5 (41.0' RT) TO M 121+91.2 (41.4' RT)			128													15,18
PM2-10	LM 218+13.30 (56' LT)												1				10
PM2-11	ES 121+47.6 (40.0' LT) TO ES 121+90.5 (37.9' LT)			53													15,18
PM2-12	ES 121+95.5 (41.0' LT) TO ES 122+15.5 (2.5' RT)							144									7
PM2-13	ES 122+21.6 (0.0' RT) TO SW 121+99.3 (0.0' RT)	145															16
PM2-14	M 119+52.7 (40.9' RT) TO M 121+58.6 (5.0' LT)	213															17
PM2-15	ES 122+01.7 (36.9' LT) TO ES 122+26.2 (34.0' LT)			30													15,18
PM2-16	M 118+27.8 (29.0' LT) TO M 120+75.4 (73.6' RT)	275															17
PM2-17	SW 121+98.6 (32.0' RT) TO SW 122+27.4 (32.0' RT)			32													15,18
PM2-18	SW 121+91.3 (40.0' RT) TO SW 121+95.1 (2.0' LT)							112									7
PM2-19	SW 121+83.3 (0.0' RT) TO SW 121+84.0 (32.0' RT)								44								10
PM2-20	NE 124+09.5 (23.2' LT) TO NE 124+34.7 (23.7' LT)											7					9
PM2-21	SE 122+10.99 (0' LT) TO SE 122+27.72 (0' LT)			17													15,18
PM2-22	M 121+58.52 (7.12' RT) TO M 121+58.61 (17' LT)								24								10
PM2-23	M 121+92.94 (1' RT)(11' LT)						2										4
PM2-24	NW 124+27.9 (14.0' LT)												1				13
PM2-25	M 121+62.0 (28.8' RT) TO M 126+73.8 (17.1' RT)		514														8,18
PM2-26	M 121+42.8 (11.1' RT) TO M 126+73.4 (6.1' RT)	530															16
PM2-27	M 121+42.9 (8.1' RT) TO M 128+05.0 (8.0' LT)	665															16
PM2-28	M 121+58.6 (5.0' LT) TO M 124+45.0 (5.0' LT)		286														8,18
PM2-29	M 123+14.0 (1.0' RT) (11.0' LT)						2										4
PM2-30	M 121+19.5 (17.0' LT) TO M 124+43.6 (17.0' LT)			328													15,18
PM2-31	M 121+19.5 (29.0' LT) TO M 129+07.5 (17.4' LT)		788														8,18
PM2-32	M 122+96.7 (48.5' LT)						1										5
PM2-33	M 120+76.9 (41.0' LT) TO M 125+00.8 (39.6' LT)			422													15,18
PM2-34	SE 121+97.0 (30' RT) TO SE 121+97.5 (2.0' LT)							96									7
PM2-35	EN 122+52.4 (0.0' RT) TO EN 123+12.4 (0.0' RT)			63													15,18
PM2-36	ES 117+36.3 (29.2' LT)						1										
PM2-37	WN 123+05.9 (37.6' RT) TO WN 123+26.0 (39.0' RT)			25													15,18
PM2-38	WN 123+39.04 (37.6' RT) TO WN 123+79.3 (38.0' RT)			49													15,18
PM2-39	M 121+19.5 (17.0' LT) (41.0' LT)								24								10
PM2-40	M 120+58.1 (80.0' LT) TO M 121+09.6 (59.9' LT)							144									7
PM2-41	WN 125+55.4 (25.9' RT)						1										6
PM2-42	WN 126+55.2 (20.7' RT)						1										6
	SHEET TOTAL	1,828	1,588	1,147		0	8	496	92			7	2	0	0		

GENERAL NOTES:

1. SEE STANDARD PLAN M-20.10.02, DROP LANE LINE.
2. SEE STANDARD PLAN M-2.20-03, OFF-RAMP GORE AREA MARKING LAYOUTS TYPE D (MMA)
3. SEE STANDARD PLAN M-24.40-02 TYPE 1S, TYPE D (MMA) SYMBOL MARKINGS TRAFFIC ARROWS FOR LOW SPEED ROADWAYS
4. SEE STANDARD PLAN M-24.40-02 TYPE 2SL, TYPE D (MMA) SYMBOL MARKINGS TRAFFIC ARROWS FOR LOW SPEED ROADWAYS
5. SEE STANDARD PLAN M-24.40-02 TYPE 2SR, TYPE D (MMA) SYMBOL MARKINGS TRAFFIC ARROWS FOR LOW SPEED ROADWAYS
6. SEE STANDARD PLAN M-24.40-02 TYPE 6SL, TYPE D (MMA) SYMBOL MARKINGS TRAFFIC ARROWS FOR LOW SPEED ROADWAYS
7. SEE STANDARD PLAN M-15.10-01, CROSSWALK LAYOUT TYPE D (MMA)
8. SEE STANDARD PLAN M-20.10-02, LONGITUDINAL MARKING PATTERN, LANE LINE.
9. SEE STANDARD PLAN M-80.10-01, TRAFFIC LETTER AND NUMERAL APPLICATIONS TYPE D (MMA)
10. SEE STANDARD PLAN M-24.60-04, SYMBOL MARKINGS: MISCELLANEOUS TYPE D (MMA)
11. SEE STANDARD PLAN M-20.30-04, LONGITUDINAL MARKING SUPPLEMENT WITH RAISED PAVEMENT MARKERS (RPM'S) TYPE D (MMA)
12. SEE STANDARD PLAN M-2.21-00 ON-RAMP GORE AREA MARKING LAYOUTS TYPE D (MMA)
13. SEE HIGHWAY RUNOFF BMP DETAIL HR-1, BMP DELINEATION - LINEAR-TYPE TYPE D (MMA)
14. SEE STANDARD PLAN M-20.10-02, EDGE LINE (WHITE)
15. SEE STANDARD PLAN M-20.10-02, WIDE LANE LINE.
16. SEE STANDARD PLAN M-20.10-02, EDGE LINE (YELLOW).
17. SEE STANDARD PLAN M-20.10-02, DOTTED EXTENSION LINE.
18. SEE STANDARD PLAN M-20.20-02, PROFILED AND EMBOSSED PLASTIC LINES TYPE D (MMA)
19. SEE STANDARD PLAN M-24.60-04, YIELD LINE SYMBOL TYPE 1
20. RAISED PAVEMENT MARKING TYPE 2W (WHITE).
21. RAISED PAVEMENT MARKING TYPE 2Y (YELLOW).

DESIGNED BY	M. TSUN				
ENTERED BY	M. TSUN				
CHECKED BY	D. PROCTOR				
APPROVED BY	H. LONGFELLOW				
		DATE	DATE	REVISION	BY

REGION NO.	STATE	FED. AID PROJ. NO.
10	WASH	

JOB NUMBER

CONTRACT NO.

TULALIP TRIBES
Parametrix

I-5 / 116TH STREET NE
INTERCHANGE IMPROVEMENTS
PHASE 4 RAMPS

QUANTITY TABULATION - PAVEMENT MARKINGS

QTPM2

SHEET 137 OF 238 SHEETS

QUANTITY TABULATION - PAVEMENT MARKINGS

NOTE:
THE FIRST NUMBER OF THE "CODE" BELOW REFERS TO THE SHEET NO. OR THE SHEET REFERENCE NO. SHOWING THE CONSTRUCTION FEATURE.

THE SECOND NUMBER REFERS TO THE CONSTRUCTION FEATURE FOUND ON THAT SHEET.

CODE	LOCATION ➢ \ UNIT OF MEASURE ➢	PLASTIC LINE	PROFILED PLASTIC LINE	PROFILED PLASTIC WIDE LANE LINE		PLASTIC WIDE LINE	PLASTIC TRAFFIC ARROW	PLASTIC CROSSWALK LINE	PLASTIC STOP LINE			PLASTIC TRAFFIC LETTER	PLASTIC DRAINAGE MARKING	PLASTIC YIELD LINE SYMBOL	RAISED PAVEMENT MARKER TYPE 2		SEE GENERAL NOTES
		L.F.	L.F.	L.F.		L.F.	EACH	S.F.	L.F.			EACH	EACH	EACH	HUND		
PM2-43	WN 127+54.4 (19.2' RT)						1										6
PM2-44	WN 123+38.7 (18.6' RT) TO WN 126+60.4 (12.5' RT)		338														8,18
PM2-45	WN 123+27.06 (0.0' RT) TO WN 129+10.0 (0.0' RT)		573												0.07		11, 16, 21
PM2-46	WN 122+80.52 (15.7' RT) TO WN 123+23.8 (18.1' RT)		48														8,18
PM2-47	M 119+88.0 (43.0' LT) TO M 121+42.8 (11.1' RT)	166															17
PM2-48	M 118+46.1 (7.9' LT) TO M 118+46.1 (17.0' RT)								25								10
PM2-49	M 119+44.6 (77.3' LT) TO M 120+56.5 (73.2' LT)	133															16
PM2-50	NE 123+25.6 (0.0' LT) (29.0' LT)							80									7
PM2-51	M 118+46.1 (5.0' RT) TO M 120+42.5 (41.0' LT)	204															17
PM2-52	M 118+78.4 (17.0' RT) (41.0' RT)								24								10
PM2-53	NE 123+33.6 (0.0' LT) TO NE 129+96.1 (0.0' LT)		662												0.08		11, 16, 21
PM2-54	NE 126+46.5 (21.6' LT)						1										5
PM2-55	M 117+62.3 (41.0' LT) TO NW 123+05.5 (0.0' RT)			46													15,18
PM2-56	NE 125+24.2 (24.8' LT)						1										5
PM2-57	M 116+70.2 (47.2' RT)											4					9
PM2-58	NE 123+33.2 (17.0' LT) TO NE126+53.2 (15.0' RT)			334													15,18
PM2-59	NE 122+82.7 (17.0' LT) TO NE 123+18.0 (17.0' LT)			37													15,18
PM2-60	M 117+12.3 (41.0' LT) TO M 119+61.4 (41.0' LT)			249													15,18
PM2-61	SW 119+23.5 (41.4' RT)												1				10
PM2-62	SE 121+03.5 (14.0' RT)												1				10
PM2-63	NW 123+75.2 (13.4' LT)						1										5
PM2-64	SW 121+02.2 (0.0' LT)												1				10
PM2-65	M 121+71.6 (41.2' RT)												1				10
PM2-66	EN 123+26.54 (0.5' RT) TO EN 123+23.81 (26.4' RT)							80									7
PM2-67	M 116+50.0 (1.0' LT) (11.0' RT)						2										4
PM2-68	LM 221+36.2 (56.0' RT)												1				10
PM2-69	M 116+43.6 (47.8' RT)						1										5
PM2-70	LM 221+66.0 (56.0' LT)												1				10
PM2-72	M 116+37.8 (41.0' RT) TO M 119+24.1 (41.0' RT)			286													15,18
PM2-73	ES 121+46.7 (0.0' RT)												1				10
PM2-74	M 118+09.9 (1.0' LT) (10.8' RT)						2										4
PM2-75	NE 123+88.2 (7.5' LT)						1										4
PM2-76	WS 121+43.9 (0.0' LT) TO WS 121+62.2 (0.0' LT)			19													15,18
PM2-77	NE 125+24.6 (7.5' LT)						1										4
	SHEET TOTAL	503	1,621	971		0	11	160	49			4	7	0	0		

GENERAL NOTES:

1. SEE STANDARD PLAN M-20.10.02, DROP LANE LINE.
2. SEE STANDARD PLAN M-2.20-03, OFF-RAMP GORE AREA MARKING LAYOUTS TYPE D (MMA)
3. SEE STANDARD PLAN M-24.40-02 TYPE 1S, TYPE D (MMA) SYMBOL MARKINGS TRAFFIC ARROWS FOR LOW SPEED ROADWAYS
4. SEE STANDARD PLAN M-24.40-02 TYPE 2SL, TYPE D (MMA) SYMBOL MARKINGS TRAFFIC ARROWS FOR LOW SPEED ROADWAYS
5. SEE STANDARD PLAN M-24.40-02 TYPE 2SR, TYPE D (MMA) SYMBOL MARKINGS TRAFFIC ARROWS FOR LOW SPEED ROADWAYS
6. SEE STANDARD PLAN M-24.40-02 TYPE 6SL, TYPE D (MMA) SYMBOL MARKINGS TRAFFIC ARROWS FOR LOW SPEED ROADWAYS
7. SEE STANDARD PLAN M-15.10-01, CROSSWALK LAYOUT TYPE D (MMA)
8. SEE STANDARD PLAN M-20.10-02, LONGITUDINAL MARKING PATTERN, LANE LINE.
9. SEE STANDARD PLAN M-80.10-01, TRAFFIC LETTER AND NUMERAL APPLICATIONS TYPE D (MMA)
10. SEE STANDARD PLAN M-24.60-04, SYMBOL MARKINGS: MISCELLANEOUS TYPE D (MMA)
11. SEE STANDARD PLAN M-20.30-04, LONGITUDINAL MARKING SUPPLEMENT WITH RAISED PAVEMENT MARKERS (RPM'S) TYPE D (MMA)
12. SEE STANDARD PLAN M-2.21-00 ON-RAMP GORE AREA MARKING LAYOUTS TYPE D (MMA)
13. SEE HIGHWAY RUNOFF BMP DETAIL HR-1, BMP DELINEATION - LINEAR-TYPE TYPE D (MMA)
14. SEE STANDARD PLAN M-20.10-02, EDGE LINE (WHITE)
15. SEE STANDARD PLAN M-20.10-02, WIDE LANE LINE.
16. SEE STANDARD PLAN M-20.10-02, EDGE LINE (YELLOW).
17. SEE STANDARD PLAN M-20.10-02, DOTTED EXTENSION LINE.
18. SEE STANDARD PLAN M-20.20-02, PROFILED AND EMBOSSED PLASTIC LINES TYPE D (MMA)
19. SEE STANDARD PLAN M-24.60-04, YIELD LINE SYMBOL TYPE 1
20. RAISED PAVEMENT MARKING TYPE 2W (WHITE).
21. RAISED PAVEMENT MARKING TYPE 2Y (YELLOW).

DESIGNED BY	M. TSUN				
ENTERED BY	M. TSUN				
CHECKED BY	D. PROCTOR				
APPROVED BY	H. LONGFELLOW				
		DATE	DATE	REVISION	BY

REGION NO.	STATE	FED. AID PROJ. NO.
10	WASH	
JOB NUMBER		
CONTRACT NO.		

TULALIP TRIBES ©
Parametrix

I-5 / 116TH STREET NE
INTERCHANGE IMPROVEMENTS
PHASE 4 RAMPS

QUANTITY TABULATION - PAVEMENT MARKINGS

QTPM3

SHEET 138 OF 238 SHEETS

QUANTITY TABULATION - PAVEMENT MARKINGS

NOTE:
THE FIRST NUMBER OF THE "CODE" BELOW REFERS TO THE SHEET NO. OR THE SHEET REFERENCE NO. SHOWING THE CONSTRUCTION FEATURE.

THE SECOND NUMBER REFERS TO THE CONSTRUCTION FEATURE FOUND ON THAT SHEET.

CODE	LOCATION ⤵ \ UNIT OF MEASURE ➢	PLASTIC LINE	PROFILED PLASTIC LINE	PROFILED PLASTIC WIDE LANE LINE		PLASTIC WIDE LINE	PLASTIC TRAFFIC ARROW	PLASTIC CROSSWALK LINE	PLASTIC STOP LINE			PLASTIC TRAFFIC LETTER	PLASTIC DRAINAGE MARKING	PLASTIC YIELD LINE SYMBOL	RAISED PAVEMENT MARKER TYPE 2		SEE GENERAL NOTES
		L.F.	L.F.	L.F.		L.F.	EACH	S.F.	L.F.			EACH	EACH	EACH	HUND		
PM2-78	NE 123+33.2 (0.0' LT) (17.0' LT)								29								10
PM2-79	NW 123+69.2 (24.4' LT)												1				10
PM2-80	EN 123+74.1 (29.9' RT)												1				10
PM2-81	NW 123+23.0 (29.5' LT) TO 123+24.0 (2.0' RT)							80									7
PM2-82	NE 126+46.2 (7.5' LT)						1										4
PM2-83	WS 121+62.2 (0.0' LT) TO WS 122+11.5 (0.0' LT)		50														16, 18
PM2-84	SE 121+58.5 (9.9' RT)						1										5
PM2-85	SW 121+17.8 (8.8 RT) (24.0' RT)						2										4
PM2-86	M 118+35.5 (41.0' RT)												1				10
PM2-87	M 117+33.6 (53.0' RT)												1				10
PM2-88	M 116+69.9 (53.0' RT)												1				10
PM2-89	M 116+44.7 (55.5' LT)												1				10
PM2-90	M 117+38.4 (67.2' LT)												1				10
PM2-91	NW 124+22.8 (14.0' LT)												1				10
PM2-92	NE 124+20.2 (0.0' RT)												1				10
PM2-93	WS 122+11.5 (0.0' RT) TO WS 122+67.0 (0.0' RT)			56													15, 18
PM2-94	LM 223+92.6 (56.0' LT)												1				10
PM2-95	NW 126+13.1 (12.5' LT)												1				10
PM2-96	NE 126+15.7 (0.0' LT)												1				10
PM2-97	LM 223+64.6 (56.0' RT)												1				10
PM2-98	NW 123+05.5 (0.0' RT) TO NW 124+05.5 (0.0' RT)		100														16, 18
PM2-99	WN 123+87.2 (0.0' LT)												1				10
PM2-100	WN 124+08.1 (0.0' LT)												1				10
PM2-101	WN 124+28.8 (0.0' LT)												1				10
PM2-102	WN 124+81.7 (0.0' RT)												1				10
PM2-103	WN 124+33.3 (40.1' RT)												1				10
PM2-104	WN 124+78.6 (40.1' RT)												1				10
PM2-105	WN 125+48.8 (35.6' RT)												1				10
PM2-106	WN 126+85.1 (27.6' RT)												1				10
PM2-107	M 121+64.3 (41.0' LT)												1				10
PM2-108	M 123+06.8 (53.0' LT)												1				10
PM2-109	M 123+81.2 (53.0' LT)												1				10
PM2-110	NW 124+05.5 (0.0' RT) TO NW 125+32.4 (0.0' RT)			127													15, 18
PM2-111	EN 123+12.4 (0.0' RT) TO EN 123+57.2 (0.0' RT)		45														16, 18
	SHEET TOTAL	0	195	183		0	4	80	29			0	24	0	0		

GENERAL NOTES:

1. SEE STANDARD PLAN M-20.10.02, DROP LANE LINE.
2. SEE STANDARD PLAN M-2.20-03, OFF-RAMP GORE AREA MARKING LAYOUTS TYPE D (MMA)
3. SEE STANDARD PLAN M-24.40-02 TYPE 1S, TYPE D (MMA) SYMBOL MARKINGS TRAFFIC ARROWS FOR LOW SPEED ROADWAYS
4. SEE STANDARD PLAN M-24.40-02 TYPE 2SL, TYPE D (MMA) SYMBOL MARKINGS TRAFFIC ARROWS FOR LOW SPEED ROADWAYS
5. SEE STANDARD PLAN M-24.40-02 TYPE 2SR, TYPE D (MMA) SYMBOL MARKINGS TRAFFIC ARROWS FOR LOW SPEED ROADWAYS
6. SEE STANDARD PLAN M-24.40-02 TYPE 6SL, TYPE D (MMA) SYMBOL MARKINGS TRAFFIC ARROWS FOR LOW SPEED ROADWAYS
7. SEE STANDARD PLAN M-15.10-01, CROSSWALK LAYOUT TYPE D (MMA)
8. SEE STANDARD PLAN M-20.10-02, LONGITUDINAL MARKING PATTERN, LANE LINE.
9. SEE STANDARD PLAN M-80.10-01, TRAFFIC LETTER AND NUMERAL APPLICATIONS TYPE D (MMA)
10. SEE STANDARD PLAN M-24.60-04, SYMBOL MARKINGS: MISCELLANEOUS TYPE D (MMA)
11. SEE STANDARD PLAN M-20.30-04, LONGITUDINAL MARKING SUPPLEMENT WITH RAISED PAVEMENT MARKERS (RPM'S) TYPE D (MMA)
12. SEE STANDARD PLAN M-2.21-00 ON-RAMP GORE AREA MARKING LAYOUTS TYPE D (MMA)
13. SEE HIGHWAY RUNOFF BMP DETAIL HR-1, BMP DELINEATION - LINEAR-TYPE TYPE D (MMA)
14. SEE STANDARD PLAN M-20.10-02, EDGE LINE (WHITE)
15. SEE STANDARD PLAN M-20.10-02, WIDE LANE LINE.
16. SEE STANDARD PLAN M-20.10-02, EDGE LINE (YELLOW).
17. SEE STANDARD PLAN M-20.10-02, DOTTED EXTENSION LINE.
18. SEE STANDARD PLAN M-20.20-02, PROFILED AND EMBOSSED PLASTIC LINES TYPE D (MMA)
19. SEE STANDARD PLAN M-24.60-04, YIELD LINE SYMBOL TYPE 1
20. RAISED PAVEMENT MARKING TYPE 2W (WHITE).
21. RAISED PAVEMENT MARKING TYPE 2Y (YELLOW).

DESIGNED BY	M. TSUN				
ENTERED BY	M. TSUN				
CHECKED BY	D. PROCTOR				
APPROVED BY	H. LONGFELLOW				
		DATE	DATE	REVISION	BY

REGION NO.	STATE	FED. AID PROJ. NO.
10	WASH	

JOB NUMBER

CONTRACT NO.

TULALIP TRIBES ©
Parametrix

I-5 / 116TH STREET NE
INTERCHANGE IMPROVEMENTS
PHASE 4 RAMPS

QUANTITY TABULATION - PAVEMENT MARKINGS

QTPM4

SHEET 139 OF 238 SHEETS

QUANTITY TABULATION - PAVEMENT MARKINGS

NOTE:
THE FIRST NUMBER OF THE "CODE" BELOW REFERS TO THE SHEET NO. OR THE SHEET REFERENCE NO. SHOWING THE CONSTRUCTION FEATURE.

THE SECOND NUMBER REFERS TO THE CONSTRUCTION FEATURE FOUND ON THAT SHEET.

CODE	LOCATION > \ UNIT OF MEASURE >	PLASTIC LINE	PROFILED PLASTIC LINE	PROFILED PLASTIC WIDE LANE LINE		PLASTIC WIDE LINE	PLASTIC TRAFFIC ARROW	PLASTIC CROSSWALK LINE	PLASTIC STOP LINE			PLASTIC TRAFFIC LETTER	PLASTIC DRAINAGE MARKING	PLASTIC YIELD LINE SYMBOL	RAISED PAVEMENT MARKER TYPE 2		SEE GENERAL NOTES
		L.F.	L.F.	L.F.		L.F.	EACH	S.F.	L.F.			EACH	EACH	EACH	HUND		
PM2-112	EN 123+57.2 (0.0' RT) TO EN 123+77.7 (0.0' RT)			20													15,18
PM2-113	LM 220+38.7 (56.0' LT)												1				10
PM2-114	LM 217+24.0 (56.0' RT)												1				10
PM2-115	LM 220+05.8 (56.0' RT)												1				10
PM2-116	WS 121+97.0 (2.0' RT) TO 122+3.0 (30.0' LT)							80									7
PM2-117	WN 123+64.4 (40.0' RT) (52.0' RT)								12								
PM2-118	NE 123+63.5 (17.0' LT) (29.0'LT)								12								
PM2-119	EN 123+57.5 (0' RT TO 29.5' RT)													15			19
PM2-120	M 120+73.8 (40.8' LT) TO M 121+31.74 (108.8' LT)					47											15
PM2-121	M 121+37.04 (88.2' LT) TO M 121+66.4 (55.8' LT)					72											
PM2-122	WN 123+03.76 (35.5' RT) TO WN 123+26.07 (37.0' RT)			27													15,18
PM2-123	WN 123+39.04 (39.6' RT) TO WN 123+77.70 (40.0' RT)			48													15,18
PM2-124	WN 123+26.1 (45.0' RT) TO WN 123+42.3 (45.0' RT)											7					9
PM3-1	WN 129+10.0 (0.0' LT) TO LM 234+78.3 (56.0' RT)			650		565									0.6		12, 20
PM3-2	NE 130+10.0 (0.0' LT) TO LM 233+91.7 (56.0' LT)			382		512									0.4		2, 20
PM3-3	NE 129+92.0 (12.0' LT)												1				10, 13
PM3-4	LM 235+14.9 (76.5' RT)												1				10, 13
PM4-1	M 114+70.25 (47.8' RT)																5
PM4-2	M 114+40 (1' LT) (11' RT)						2										4
PM4-3	M 113+72.00 (51.36' LT)												1				10
PM4-4	M 110+86.4 (53.0' RT) TO M 112+24.8 (53.0' RT)			72													15,18
PM4-5	M 113+37.9 (38.7' RT) TO M 116+37.8 (41.0' RT)	300															
PM4-7	NOT USED																
PM4-8	NOT USED																
PM4-9	NOT USED																
PM4-10	M 110+20.6 (81.7' RT) TO M 112+83.8 (81.2' RT)	284															14
PM4-11	M 106+99.1 (42.0' LT) TO M 112+82.7 (96.5' LT)	605															14
PM4-12	M 111+84.9 (3.3' LT)						1										4
PM4-13	M 110+95.2 (0.7' LT)						1										4
PM4-14	M 111+62.0 (10.9' RT) TO M 114+30.0 (17.0' RT)	268															17
PM4-15	M 107+49.0 (30.0' RT) TO M 109+50.7 (48.1' RT)	209															14
PM4-16	M 107+01.3 (0.0' LT)																4
PM4-17	M 109+86.1 (6.0' LT) TO M 111+94.7 (10.3' LT)			210													15,18
PM4-18	M 106+80.6 (30.0' LT) TO M 109+80.6 (30.0' LT)	300															17
	SHEET TOTAL	1,966	0	1,409		1,196	4	80	24			7	6	15	1.0		

GENERAL NOTES:

1. SEE STANDARD PLAN M-20.10.02, DROP LANE LINE.
2. SEE STANDARD PLAN M-2.20-03, OFF-RAMP GORE AREA MARKING LAYOUTS TYPE D (MMA)
3. SEE STANDARD PLAN M-24.40-02 TYPE 1S, TYPE D (MMA) SYMBOL MARKINGS TRAFFIC ARROWS FOR LOW SPEED ROADWAYS
4. SEE STANDARD PLAN M-24.40-02 TYPE 2SL, TYPE D (MMA) SYMBOL MARKINGS TRAFFIC ARROWS FOR LOW SPEED ROADWAYS
5. SEE STANDARD PLAN M-24.40-02 TYPE 2SR, TYPE D (MMA) SYMBOL MARKINGS TRAFFIC ARROWS FOR LOW SPEED ROADWAYS
6. SEE STANDARD PLAN M-24.40-02 TYPE 6SL, TYPE D (MMA) SYMBOL MARKINGS TRAFFIC ARROWS FOR LOW SPEED ROADWAYS
7. SEE STANDARD PLAN M-15.10-01, CROSSWALK LAYOUT TYPE D (MMA)
8. SEE STANDARD PLAN M-20.10-02, LONGITUDINAL MARKING PATTERN, LANE LINE.
9. SEE STANDARD PLAN M-80.10-01, TRAFFIC LETTER AND NUMERAL APPLICATIONS TYPE D (MMA)
10. SEE STANDARD PLAN M-24.60-04, SYMBOL MARKINGS: MISCELLANEOUS TYPE D (MMA)
11. SEE STANDARD PLAN M-20.30-04, LONGITUDINAL MARKING SUPPLEMENT WITH RAISED PAVEMENT MARKERS (RPM'S) TYPE D (MMA)
12. SEE STANDARD PLAN M-2.21-00 ON-RAMP GORE AREA MARKING LAYOUTS TYPE D (MMA)
13. SEE HIGHWAY RUNOFF BMP DETAIL HR-1, BMP DELINEATION - LINEAR-TYPE TYPE D (MMA)
14. SEE STANDARD PLAN M-20.10-02, EDGE LINE (WHITE)
15. SEE STANDARD PLAN M-20.10-02, WIDE LANE LINE.
16. SEE STANDARD PLAN M-20.10-02, EDGE LINE (YELLOW).
17. SEE STANDARD PLAN M-20.10-02, DOTTED EXTENSION LINE.
18. SEE STANDARD PLAN M-20.20-02, PROFILED AND EMBOSSED PLASTIC LINES TYPE D (MMA)
19. SEE STANDARD PLAN M-24.60-04, YIELD LINE SYMBOL TYPE 1
20. RAISED PAVEMENT MARKING TYPE 2W (WHITE).
21. RAISED PAVEMENT MARKING TYPE 2Y (YELLOW).

DESIGNED BY	M. TSUN				
ENTERED BY	M. TSUN				
CHECKED BY	D. PROCTOR				
APPROVED BY	H. LONGFELLOW				
		DATE	DATE	REVISION	BY

REGION NO.	STATE	FED. AID PROJ. NO.
10	WASH	

JOB NUMBER

CONTRACT NO.

TULALIP TRIBES
Parametrix

I-5 / 116TH STREET NE
INTERCHANGE IMPROVEMENTS
PHASE 4 RAMPS

QUANTITY TABULATION - PAVEMENT MARKINGS

QTPM5

QUANTITY TABULATION - PAVEMENT MARKINGS

NOTE:
THE FIRST NUMBER OF THE "CODE" BELOW REFERS TO THE SHEET NO. OR THE SHEET REFERENCE NO. SHOWING THE CONSTRUCTION FEATURE.

THE SECOND NUMBER REFERS TO THE CONSTRUCTION FEATURE FOUND ON THAT SHEET.

CODE	LOCATION ➢ \ UNIT OF MEASURE ➢	PLASTIC LINE	PROFILED PLASTIC LINE	PROFILED PLASTIC WIDE LANE LINE		PLASTIC WIDE LINE	PLASTIC TRAFFIC ARROW	PLASTIC CROSSWALK LINE	PLASTIC STOP LINE			PLASTIC TRAFFIC LETTER	PLASTIC DRAINAGE MARKING	PLASTIC YIELD LINE SYMBOL	RAISED PAVEMENT MARKER TYPE 2		SEE GENERAL NOTES
		L.F.	L.F.	L.F.		L.F.	EACH	S.F.	L.F.			EACH	EACH	EACH	HUND		
PM4-19	M 106+80.6 (18.0' LT) TO M 109+80.6 (18.0' LT)	300															17
PM4-20	M 106+49.0 (30.0' LT) TO M 106+80.6 (30.0' LT)			32													15,18
PM4-21	M 106+49.0 (18.0' LT) TO M 106+80.6 (18.0' LT)			32													15,18
PM4-22	M 114+44.9 (47.1' RT)																9
PM4-23	M 109+97.0 (11.9' LT) (24.9' LT) (36.9' LT)																9
PM4-24	M 109+74.2 (11.2' LT) (24.0' LT) (36.0' LT)						3										3,4,5
PM4-25	M 108+34.7 (25.8' LT) (37.8' LT)																9
PM4-26	M 108+11.8 (24.9' LT) (36.9' LT)						2										3,5
PM4-27	M 110+32.1 (7.4' RT) TO M 118+60.1 (11.7' LT)	829															16
PM4-28	M 110+32.0 (8.0' RT) TO M 118+59.9 (8.7' LT)	829															16
PM4-29	M 110+73.3 (32.9' RT) TO M 113+37.9 (38.7' RT)		265														1,18
PM4-30	M 109+80.5 (18.0' LT) TO M 118+27.8 (29.0' LT)		850														8,18
PM4-31	M 109+80.6 (30.0' LT) TO M 117+12.3 (41.0' LT)		730														8,18
PM4-32	M 113+25.5 (91.5' LT) TO LM 236+65.2 (55.9' LT)	1823															14
PM4-33	M 107+49.0 (18.0' RT) TO M 118+78.4 (29.0' RT)		1130														8,18
PM4-34	M 114+30.0 (17.0' RT) TO M 118+78.4 (17.0' RT)			448													15,18
PM4-35	M 114+30.0 (5.0' RT) TO M 118+46.1 (5.0' RT)		430														8,18
PM5-1	M 124+85.0 (46.5' LT)						1										5
PM5-2	M 124+35.0 (11.0' LT) (1.0' RT)						2										4
PM5-3	M 127+38.8 (2.2' LT)						1										4
PM5-4	M 124+43.6 (17.0' LT) TO M 127+06.5 (10.4' LT)	263															17
PM5-5	M 126+73.4 (6.1' RT) TO M 128+05.0 (5.1' LT)	134															16
PM5-6	M 126+48.4 (35.9' LT) TO M 127+75.4 (32.7' LT)			127													15,18
PM5-7	NOT USED																
PM5-8	M 126+48.4 (35.9' LT) TO M 126+72.2 (82.6' LT)			46													15,18
PM5-9	M 126+72.2 (82.6' LT) TO M 127+15.0 (34.2' LT)			52													15,18
PM5-10	M 126+56.6 (82.4' LT) TO LM 235+81.2 (74.0' RT)	1758															14
PM5-11	M 124+43.6 (53.3' LT)												1				10
PM5-12	M 125+51.1 (50.3' LT) TO M 126+15.0 (40.6' LT)			85													15,18
PM5-13	M 124+45.9 (34.8' RT)												1				10
PM5-14	M 125+42.8 (32.3' RT)												1				10
	SHEET TOTAL	5,636	3,405	822		0	9	0	0			0	3	0	0		
	PROJECT TOTAL	14,010	9,390	6,130		2,520	43	816	194			25	52	15	2.6		

GENERAL NOTES:

1. SEE STANDARD PLAN M-20.10.02, DROP LANE LINE.
2. SEE STANDARD PLAN M-2.20-03, OFF-RAMP GORE AREA MARKING LAYOUTS TYPE D (MMA)
3. SEE STANDARD PLAN M-24.40-02 TYPE 1S, TYPE D (MMA) SYMBOL MARKINGS TRAFFIC ARROWS FOR LOW SPEED ROADWAYS
4. SEE STANDARD PLAN M-24.40-02 TYPE 2SL, TYPE D (MMA) SYMBOL MARKINGS TRAFFIC ARROWS FOR LOW SPEED ROADWAYS
5. SEE STANDARD PLAN M-24.40-02 TYPE 2SR, TYPE D (MMA) SYMBOL MARKINGS TRAFFIC ARROWS FOR LOW SPEED ROADWAYS
6. SEE STANDARD PLAN M-24.40-02 TYPE 6SL, TYPE D (MMA) SYMBOL MARKINGS TRAFFIC ARROWS FOR LOW SPEED ROADWAYS
7. SEE STANDARD PLAN M-15.10-01, CROSSWALK LAYOUT TYPE D (MMA)
8. SEE STANDARD PLAN M-20.10-02, LONGITUDINAL MARKING PATTERN, LANE LINE.
9. SEE STANDARD PLAN M-80.10-01, TRAFFIC LETTER AND NUMERAL APPLICATIONS TYPE D (MMA)
10. SEE STANDARD PLAN M-24.60-04, SYMBOL MARKINGS: MISCELLANEOUS TYPE D (MMA)
11. SEE STANDARD PLAN M-20.30-04, LONGITUDINAL MARKING SUPPLEMENT WITH RAISED PAVEMENT MARKERS (RPM'S) TYPE D (MMA)
12. SEE STANDARD PLAN M-2.21-00 ON-RAMP GORE AREA MARKING LAYOUTS TYPE D (MMA)
13. SEE HIGHWAY RUNOFF BMP DETAIL HR-1, BMP DELINEATION - LINEAR-TYPE TYPE D (MMA)
14. SEE STANDARD PLAN M-20.10-02, EDGE LINE (WHITE)
15. SEE STANDARD PLAN M-20.10-02, WIDE LANE LINE.
16. SEE STANDARD PLAN M-20.10-02, EDGE LINE (YELLOW).
17. SEE STANDARD PLAN M-20.10-02, DOTTED EXTENSION LINE.
18. SEE STANDARD PLAN M-20.20-02, PROFILED AND EMBOSSED PLASTIC LINES TYPE D (MMA)
19. SEE STANDARD PLAN M-24.60-04, YIELD LINE SYMBOL TYPE 1
20. RAISED PAVEMENT MARKING TYPE 2W (WHITE).
21. RAISED PAVEMENT MARKING TYPE 2Y (YELLOW).

DESIGNED BY	M. TSUN			
ENTERED BY	M. TSUN			
CHECKED BY	D. PROCTOR			
APPROVED BY	H. LONGFELLOW			
		DATE	DATE	REVISION	BY

REGION NO.	STATE	FED. AID PROJ. NO.
10	WASH	

JOB NUMBER

CONTRACT NO.

TULALIP TRIBES
Parametrix

I-5 / 116TH STREET NE
INTERCHANGE IMPROVEMENTS
PHASE 4 RAMPS

QUANTITY TABULATION - PAVEMENT MARKINGS

QTPM6

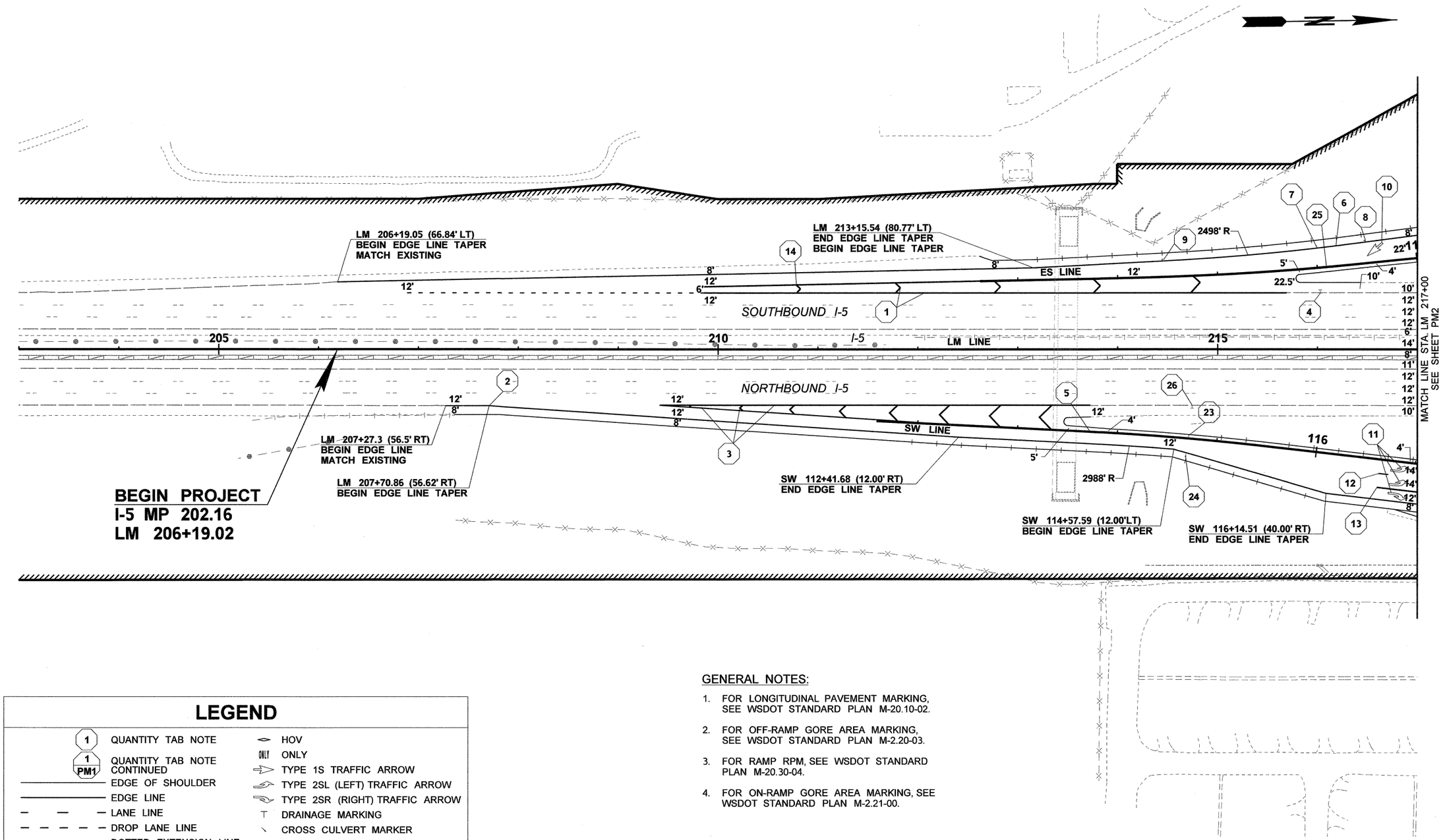

LEGEND

- (1) QUANTITY TAB NOTE
- (1 / PM1) QUANTITY TAB NOTE CONTINUED
- EDGE OF SHOULDER
- EDGE LINE
- LANE LINE
- DROP LANE LINE
- DOTTED EXTENSION LINE
- WIDE LINE
- STOP LINE
- CROSSWALK LINE
- HOV
- ONLY
- TYPE 1S TRAFFIC ARROW
- TYPE 2SL (LEFT) TRAFFIC ARROW
- TYPE 2SR (RIGHT) TRAFFIC ARROW
- DRAINAGE MARKING
- CROSS CULVERT MARKER

GENERAL NOTES:

1. FOR LONGITUDINAL PAVEMENT MARKING, SEE WSDOT STANDARD PLAN M-20.10-02.
2. FOR OFF-RAMP GORE AREA MARKING, SEE WSDOT STANDARD PLAN M-2.20-03.
3. FOR RAMP RPM, SEE WSDOT STANDARD PLAN M-20.30-04.
4. FOR ON-RAMP GORE AREA MARKING, SEE WSDOT STANDARD PLAN M-2.21-00.

0 50 100
SCALE IN FEET

FILE NAME	U:\PSO\Projects\Clients\1598-TulalipTribes\554-1598-095 116th-Ph4-PSE\99Svcs\CADD\DGN\PS&ESheets\BL1598033_PS_PM.dgn
TIME	3:19:10 PM
DATE	8/28/2017
PLOTTED BY	purgabut
DESIGNED BY	M. TSUN
ENTERED BY	B. PURGANAN
CHECKED BY	D. PROCTOR
APPROVED BY	H. LONGFELLOW

REVISION	DATE	BY

REGION NO.	STATE	FED.AID PROJ.NO.
10	WASH	
JOB NUMBER		
CONTRACT NO.		LOCATION NO.

P.E. STAMP BOX — DATE

HARRY DAVID LONGFELLOW — STATE OF WASHINGTON — 37002 — REGISTERED PROFESSIONAL ENGINEER

P.E. STAMP BOX — DATE

TULALIP TRIBES — Parametrix ©

I-5 / 116TH STREET NE INTERCHANGE IMPROVEMENTS PHASE 4 RAMPS

PAVEMENT MARKING PLAN

Plot 2

PLAN REF NO PM1

SHEET 142 OF 238 SHEETS

GENERAL NOTES:

1. FOR LONGITUDINAL PAVEMENT MARKING, SEE WSDOT STANDARD PLAN M-20.10-02.
2. FOR OFF-RAMP GORE AREA MARKING, SEE WSDOT STANDARD PLAN M-2.20-03.
3. FOR RAMP RPM, SEE WSDOT STANDARD PLAN M-20.30-04.
4. FOR ON-RAMP GORE AREA MARKING, SEE WSDOT STANDARD PLAN M-2.21-00.

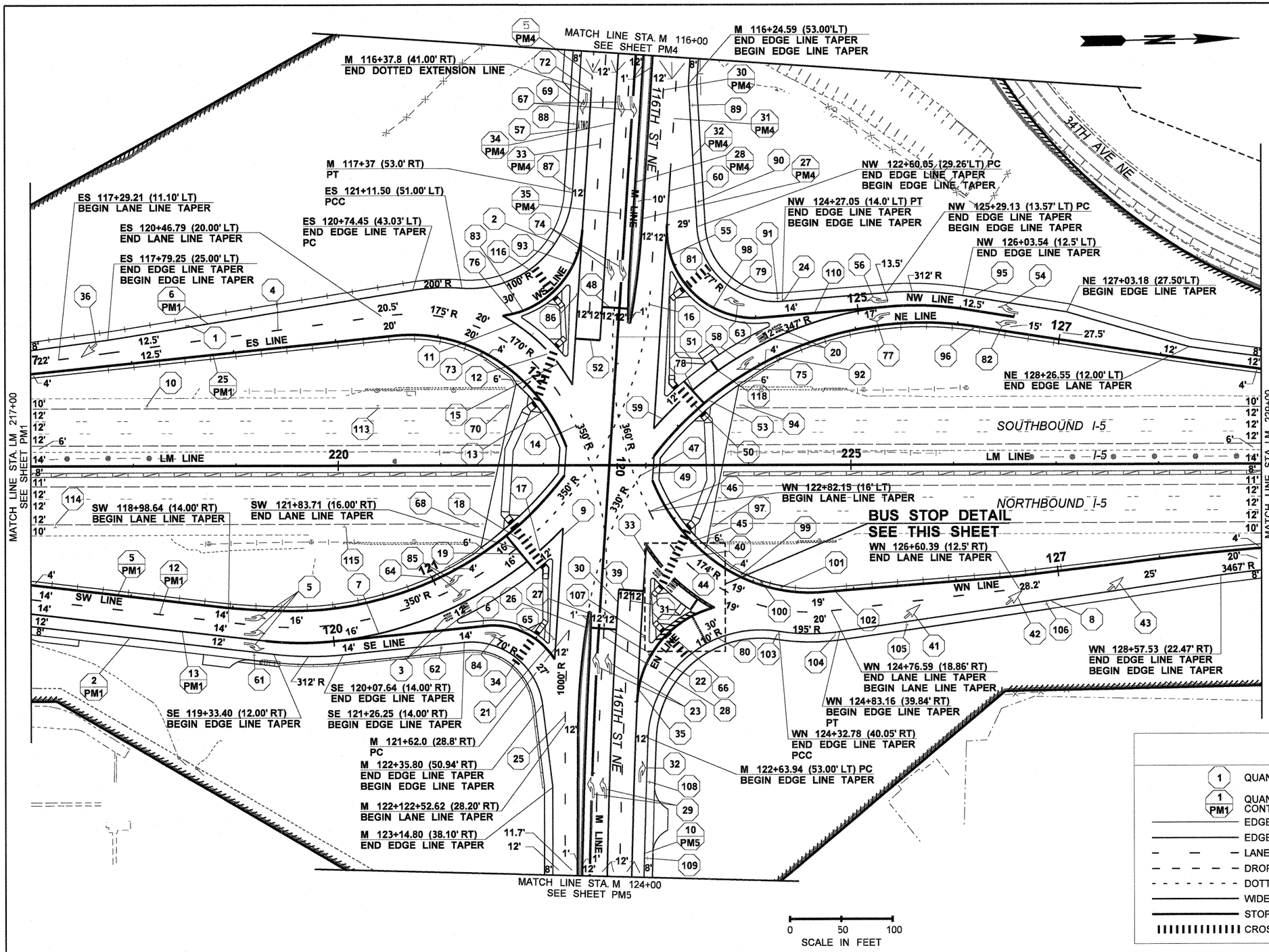

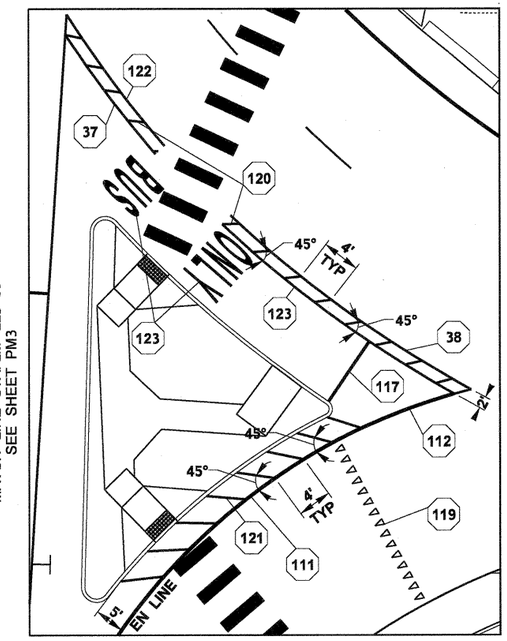

BUS STOP DETAIL

I-5 NORTH BOUND ON-RAMP

LEGEND

1	QUANTITY TAB NOTE
1 PM1	QUANTITY TAB NOTE CONTINUED
	EDGE OF SHOULDER
	EDGE LINE
	LANE LINE
	DROP LANE LINE
	DOTTED EXTENSION LINE
	WIDE LINE
	STOP LINE
	CROSSWALK LINE
	HOV
ONLY	ONLY
	TYPE 1S TRAFFIC ARROW
	TYPE 2SL (LEFT) TRAFFIC ARROW
	TYPE 2SR (RIGHT) TRAFFIC ARROW
T	DRAINAGE MARKING
	CROSS CULVERT MARKER

FILE NAME	U:\PSO\Projects\Clients\1598-TulalipTribes\554-1598-095 116th-Ph4-PSE\99Svcs\CADD\DGN\PS&ESheets\BL1598033_PS_PM.dgn
TIME	11:49:54 AM
DATE	8/25/2017
PLOTTED BY	purgabut
DESIGNED BY	M. TSUN
ENTERED BY	B. PURGANAN
CHECKED BY	D. PROCTOR
APPROVED BY	H. LONGFELLOW

REVISION | DATE | BY

REGION NO.	STATE	FED.AID PROJ.NO.
10	WASH	
JOB NUMBER		
CONTRACT NO.		LOCATION NO.

P.E. STAMP BOX DATE

P.E. STAMP BOX DATE

TULALIP TRIBES Parametrix

I-5 / 116TH STREET NE INTERCHANGE IMPROVEMENTS PHASE 4 RAMPS

PAVEMENT MARKING PLAN

Plot 3

PLAN REF NO PM2

SHEET 143 OF 238 SHEETS

GENERAL NOTES:

1. FOR LONGITUDINAL PAVEMENT MARKING, SEE WSDOT STANDARD PLAN M-20.10-02.
2. FOR OFF-RAMP GORE AREA MARKING, SEE WSDOT STANDARD PLAN M-2.20-03.
3. FOR RAMP RPM, SEE WSDOT STANDARD PLAN M-20.30-04.
4. FOR ON-RAMP GORE AREA MARKING, SEE WSDOT STANDARD PLAN M-2.21-00.

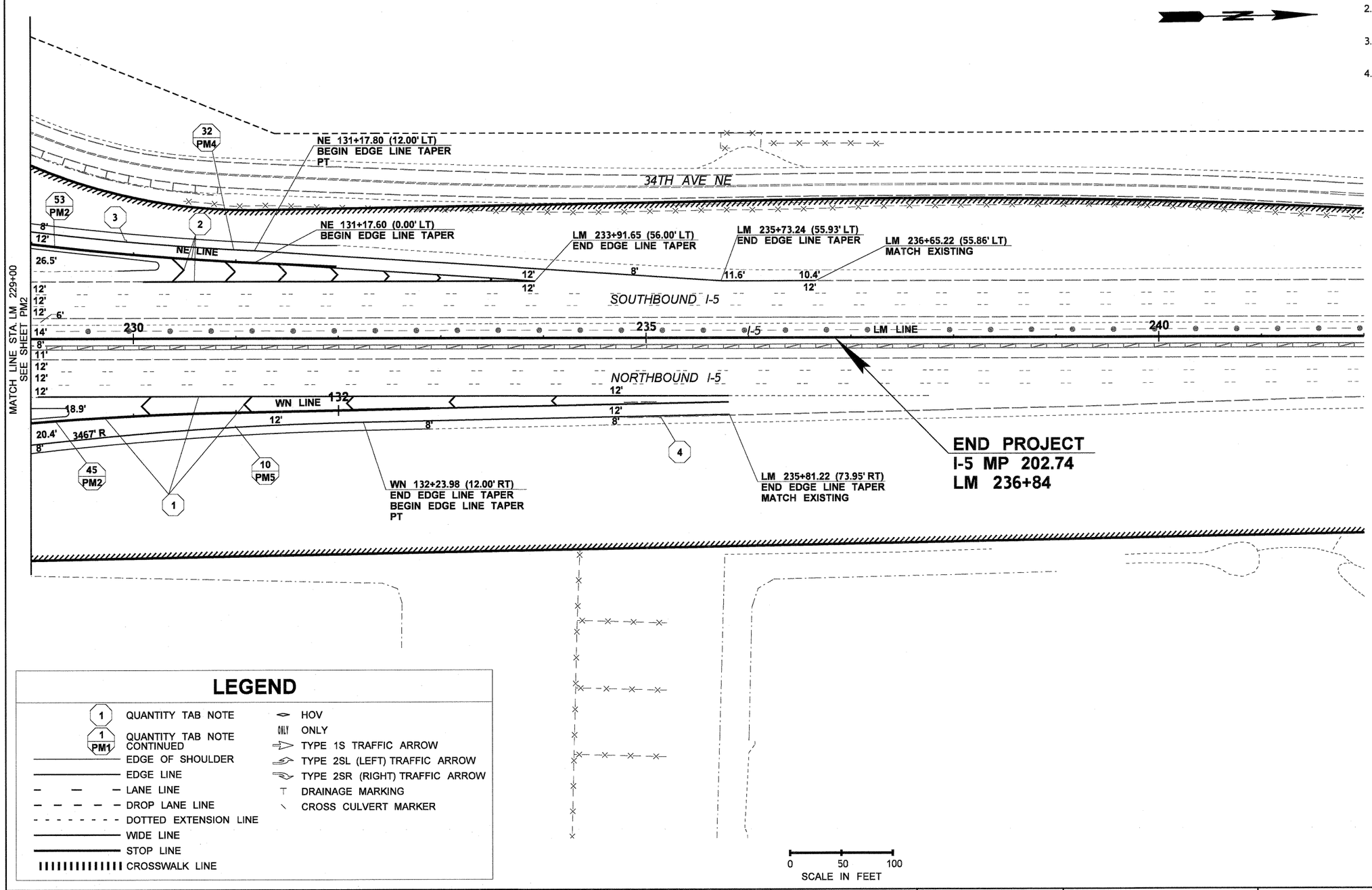

LEGEND

1 QUANTITY TAB NOTE	HOV
1 PM1 QUANTITY TAB NOTE CONTINUED	ONLY
EDGE OF SHOULDER	TYPE 1S TRAFFIC ARROW
EDGE LINE	TYPE 2SL (LEFT) TRAFFIC ARROW
LANE LINE	TYPE 2SR (RIGHT) TRAFFIC ARROW
DROP LANE LINE	DRAINAGE MARKING
DOTTED EXTENSION LINE	CROSS CULVERT MARKER
WIDE LINE	
STOP LINE	
CROSSWALK LINE	

0 50 100
SCALE IN FEET

FILE NAME	U:\PSO\Projects\Clients\1598-TulalipTribes\554-1598-095 116th-Ph4-PSE\99Svcs\CADD\DGN\PS&ESheets\BL1598033_PS_PM.dgn
TIME	11:50:05 AM
DATE	8/25/2017
PLOTTED BY	purgabut
DESIGNED BY	M. TSUN
ENTERED BY	B. PURGANAN
CHECKED BY	D. PROCTOR
APPROVED BY	H. LONGFELLOW

REVISION	DATE	BY

REGION NO.	STATE	FED.AID PROJ.NO.
10	WASH	
JOB NUMBER		
CONTRACT NO.		LOCATION NO.

P.E. STAMP BOX DATE

STATE OF WASHINGTON HARRY DAVID LONGFELLOW 37302 REGISTERED PROFESSIONAL ENGINEER 8/25/17

P.E. STAMP BOX DATE

TULALIP TRIBES
Parametrix

I-5 / 116TH STREET NE
INTERCHANGE IMPROVEMENTS
PHASE 4 RAMPS

PAVEMENT MARKING PLAN

Plot 4
PLAN REF NO
PM3
SHEET 144 OF 238 SHEETS

GENERAL NOTES:

1. FOR LONGITUDINAL PAVEMENT MARKING, SEE WSDOT STANDARD PLAN M-20.10-02.
2. FOR OFF-RAMP GORE AREA MARKING, SEE WSDOT STANDARD PLAN M-2.20-03.
3. FOR RAMP RPM, SEE WSDOT STANDARD PLAN M-20.30-04.
4. FOR ON-RAMP GORE AREA MARKING, SEE WSDOT STANDARD PLAN M-2.21-00.

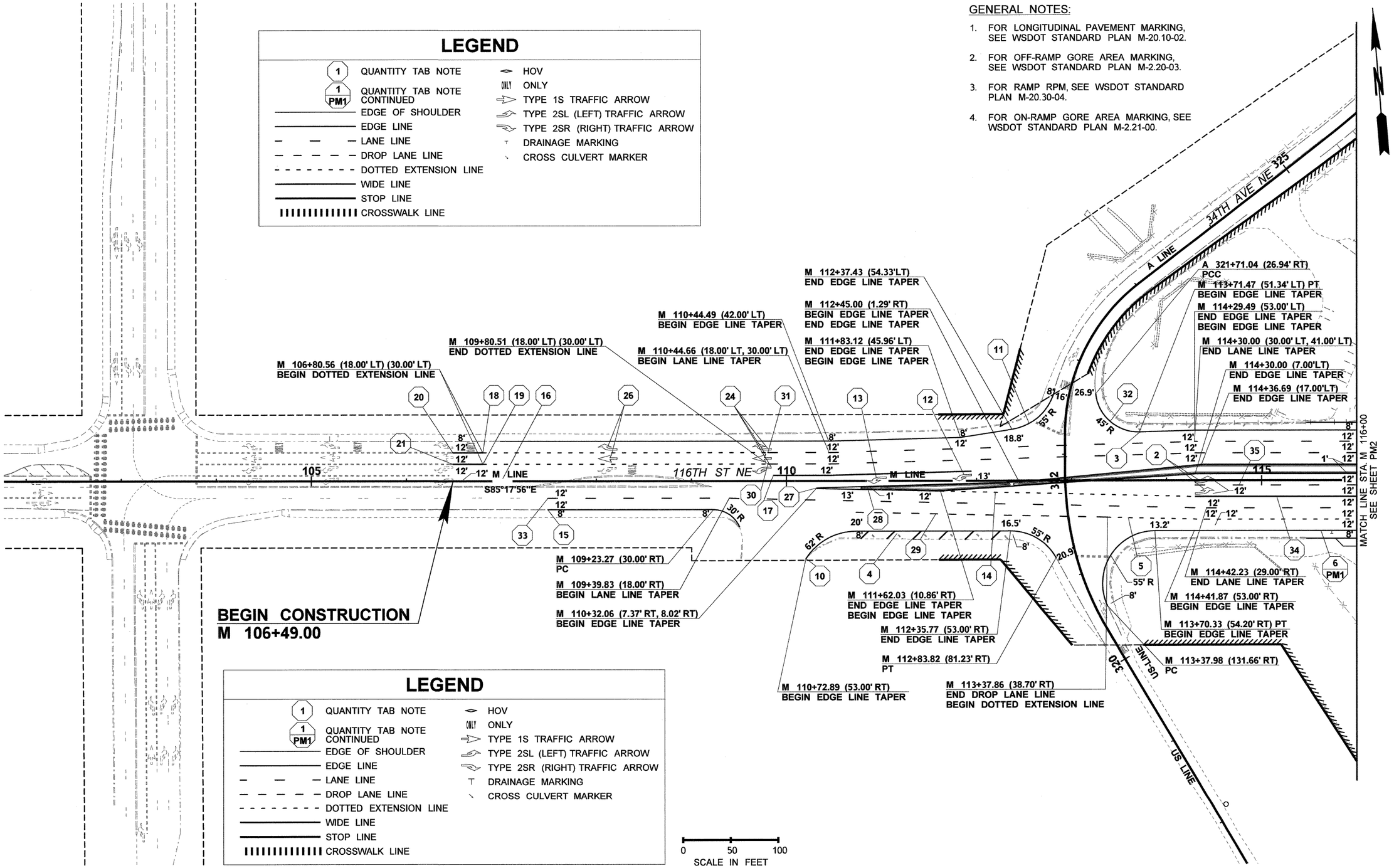

FILE NAME	U:\PSO\Projects\Clients\1598-TulalipTribes\554-1598-095 116th-Ph4-PSE\99Svcs\CADD\DGN\PS&ESheets\BL1598033_PS_PM.dgn
TIME	1:56:57 PM
DATE	8/28/2017
PLOTTED BY	purgabut
DESIGNED BY	M. TSUN
ENTERED BY	B. PURGANAN
CHECKED BY	D. PROCTOR
APPROVED BY	H. LONGFELLOW

REVISION	DATE	BY

REGION NO.	STATE	FED.AID PROJ.NO.
10	WASH	
JOB NUMBER		
CONTRACT NO.		LOCATION NO.

P.E. STAMP BOX — DATE

P.E. STAMP BOX — DATE

TULALIP TRIBES
Parametrix

I-5 / 116TH STREET NE INTERCHANGE IMPROVEMENTS PHASE 4 RAMPS

PAVEMENT MARKING PLAN

Plot 6

PLAN REF NO PM4

SHEET 145 OF 238 SHEETS

GENERAL NOTES:

1. FOR LONGITUDINAL PAVEMENT MARKING, SEE WSDOT STANDARD PLAN M-20.10-02.
2. FOR OFF-RAMP GORE AREA MARKING, SEE WSDOT STANDARD PLAN M-2.20-03.
3. FOR RAMP RPM, SEE WSDOT STANDARD PLAN M-20.30-04.
4. FOR ON-RAMP GORE AREA MARKING, SEE WSDOT STANDARD PLAN M-2.21-00.

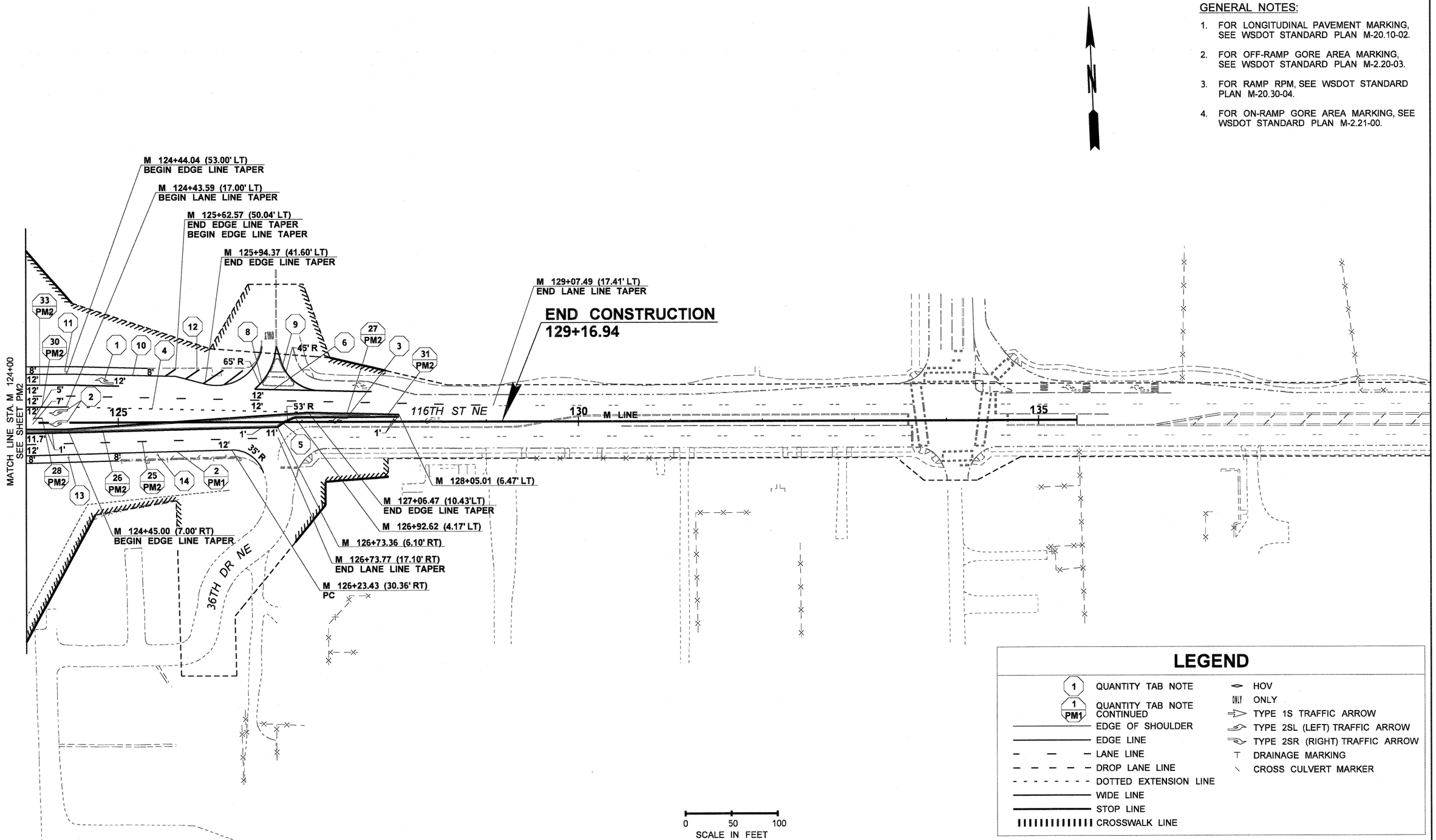

LEGEND

(1)	QUANTITY TAB NOTE
(1 PM1)	QUANTITY TAB NOTE CONTINUED
	EDGE OF SHOULDER
	EDGE LINE
	LANE LINE
	DROP LANE LINE
	DOTTED EXTENSION LINE
	WIDE LINE
	STOP LINE
	CROSSWALK LINE
	HOV
ONLY	ONLY
	TYPE 1S TRAFFIC ARROW
	TYPE 2SL (LEFT) TRAFFIC ARROW
	TYPE 2SR (RIGHT) TRAFFIC ARROW
T	DRAINAGE MARKING
	CROSS CULVERT MARKER

FILE NAME	U:\PSO\Projects\Clients\1598-TulalipTribes\554-1598-095 116th-Ph4-PSE\99Svcs\CADD\DGN\PS&ESheets\BL1598033_PS_PM.dgn
TIME	11:50:28 AM
DATE	8/25/2017
PLOTTED BY	purgabut
DESIGNED BY	M. TSUN
ENTERED BY	B. PURGANAN
CHECKED BY	D. PROCTOR
APPROVED BY	H. LONGFELLOW

REVISION | DATE | BY

REGION NO.	STATE	FED.AID PROJ.NO.
10	WASH	
JOB NUMBER		
CONTRACT NO.		LOCATION NO.

P.E. STAMP BOX — DATE

HARRY DAVID LONGFELLOW — STATE OF WASHINGTON — 37902 — REGISTERED PROFESSIONAL ENGINEER — 8/25/17

P.E. STAMP BOX — DATE

TULALIP TRIBES — Parametrix

I-5 / 116TH STREET NE INTERCHANGE IMPROVEMENTS PHASE 4 RAMPS

PAVEMENT MARKING PLAN

Plot 7

PLAN REF NO PM5

SHEET 146 OF 238 SHEETS

NOTES:

1. THE FINAL CONCRETE LEVELING PAD ELEVATION MAY BE LOWER. FINAL CONCRETE LEVELING PAD ELEVATION DETERMINED BY THE WALL MANUFACTURER.
2. WALL DETAIL AT CULVERT, SEE SHEET WD1.
3. SEE SHEET AL1 FOR SW LINE HORIZONTAL ALIGNMENT DATA.

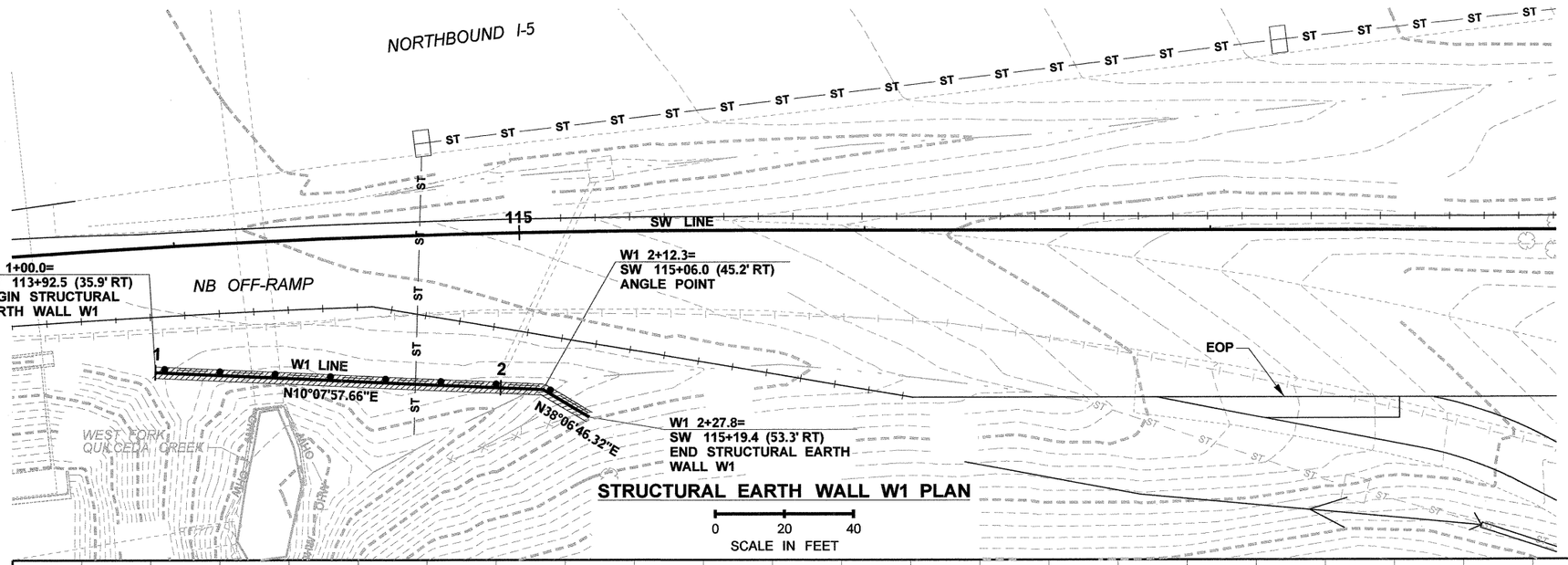

STRUCTURAL EARTH WALL W1 PLAN

0 20 40
SCALE IN FEET

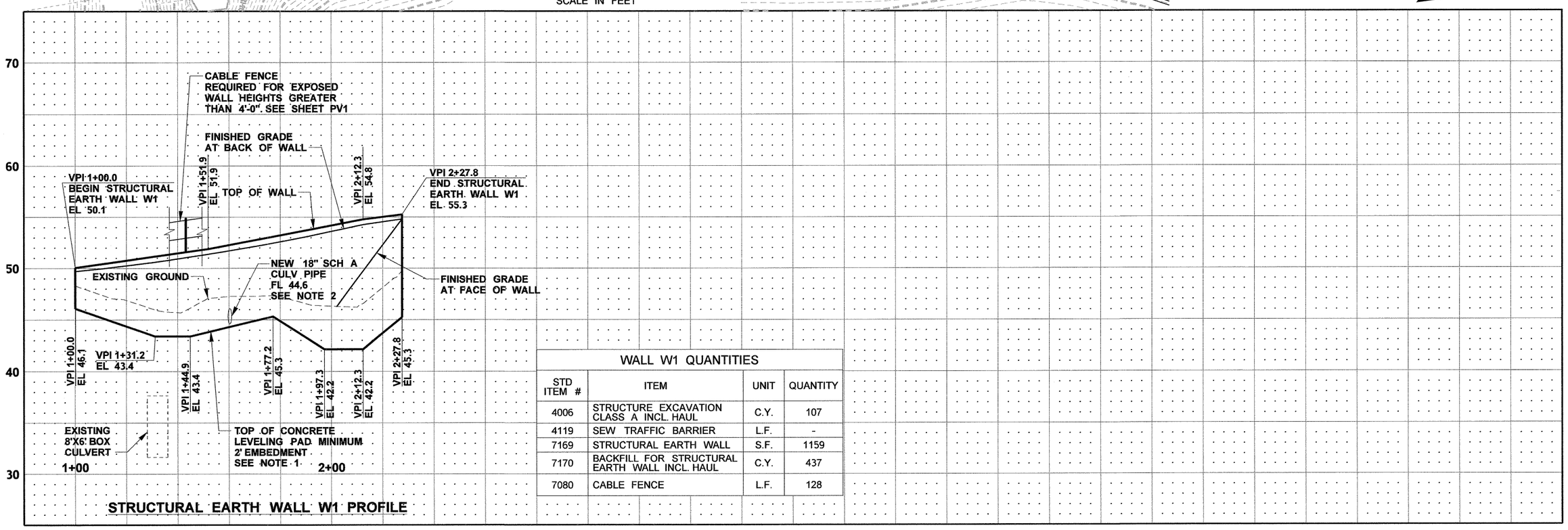

STRUCTURAL EARTH WALL W1 PROFILE

WALL W1 QUANTITIES

STD ITEM #	ITEM	UNIT	QUANTITY
4006	STRUCTURE EXCAVATION CLASS A INCL. HAUL	C.Y.	107
4119	SEW TRAFFIC BARRIER	L.F.	-
7169	STRUCTURAL EARTH WALL	S.F.	1159
7170	BACKFILL FOR STRUCTURAL EARTH WALL INCL. HAUL	C.Y.	437
7080	CABLE FENCE	L.F.	128

FILE NAME	U:\PSO\Projects\Clients\1598-TulalipTribes\554-1598-095 116th-Ph4-PSE\99Svcs\CADD\DGN\PS&ESheets\BL1598033_PS_WA.dgn
TIME	9:45:56 AM
DATE	8/30/2017
PLOTTED BY	purgabut
DESIGNED BY	M. TSUN
ENTERED BY	B. PURGANAN
CHECKED BY	J. MERTH
APPROVED BY	H. LONGFELLOW

REVISION | DATE | BY

REGION NO.	STATE	FED.AID PROJ.NO.
10	WASH	
JOB NUMBER		
CONTRACT NO.		LOCATION NO.

P.E. STAMP BOX — DATE

JOSEPH R. MERTH, STATE OF WASHINGTON, 33224, REGISTERED PROFESSIONAL ENGINEER — 8/30/17 DATE

P.E. STAMP BOX

TULALIP TRIBES — Parametrix

I-5 / 116TH STREET NE
INTERCHANGE IMPROVEMENTS
PHASE 4 RAMPS

RETAINING WALL PLAN AND PROFILE

Plot 5
PLAN REF. NO. WA1
SHEET 147 OF 238 SHEETS

NOTES:

1. THE FINAL CONCRETE LEVELING PAD ELEVATION MAY BE LOWER. FINAL CONCRETE LEVELING PAD ELEVATION DETERMINED BY THE WALL MANUFACTURER.
2. SEE SHEETS AL1 AND AL2 FOR ES LINE HORIZONTAL ALIGNMENT DATA.

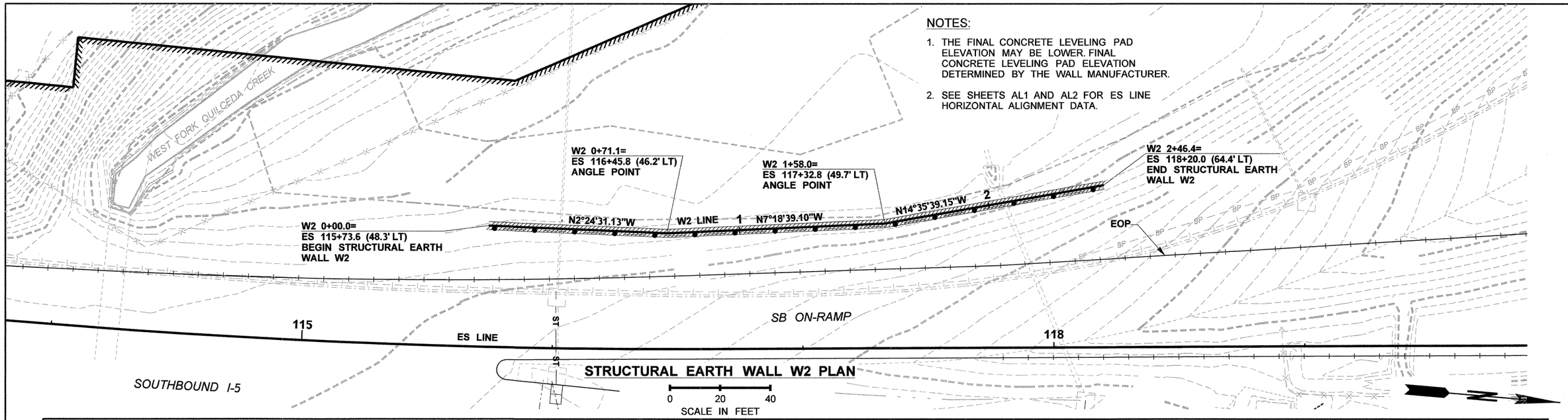

STRUCTURAL EARTH WALL W2 PLAN

WALL W2 QUANTITIES			
STD ITEM #	ITEM	UNIT	QUANTITY
4006	STRUCTURE EXCAVATION CLASS A INCL. HAUL	C.Y.	318
4119	SEW TRAFFIC BARRIER	L.F.	-
7169	STRUCTURAL EARTH WALL	S.F.	1346
7170	BACKFILL FOR STRUCTURAL EARTH WALL INCL. HAUL	C.Y.	351
7080	CABLE FENCE	L.F.	247

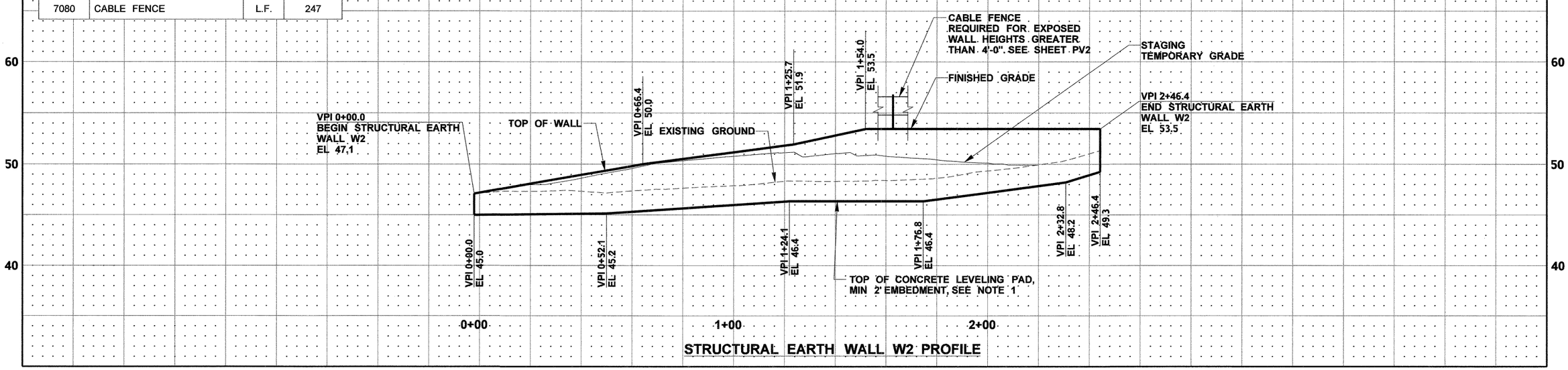

STRUCTURAL EARTH WALL W2 PROFILE

FILE NAME	U:\PSO\Projects\Clients\1598-TulalipTribes\554-1598-095 116th-Ph4-PSE\99Svcs\CADD\DGN\PS&ESheets\BL1598033_PS_WA.dgn
TIME	9:48:41 AM
DATE	8/30/2017
PLOTTED BY	purgabut
DESIGNED BY	M. TSUN
ENTERED BY	B. PURGANAN
CHECKED BY	J. MERTH
APPROVED BY	H. LONGFELLOW

REVISION	DATE	BY

REGION NO.	STATE	FED.AID PROJ.NO.
10	WASH	
JOB NUMBER		
CONTRACT NO.		LOCATION NO.

P.E. STAMP BOX — DATE

JOSEPH R. MEEKER — STATE OF WASHINGTON — 33224 — REGISTERED PROFESSIONAL ENGINEER

8/30/17 DATE — P.E. STAMP BOX

TULALIP TRIBES — Parametrix

I-5 / 116TH STREET NE
INTERCHANGE IMPROVEMENTS
PHASE 4 RAMPS

RETAINING WALL PLAN AND PROFILE

Plot 3

PLAN REF. NO. WA2

SHEET 148 OF 238 SHEETS

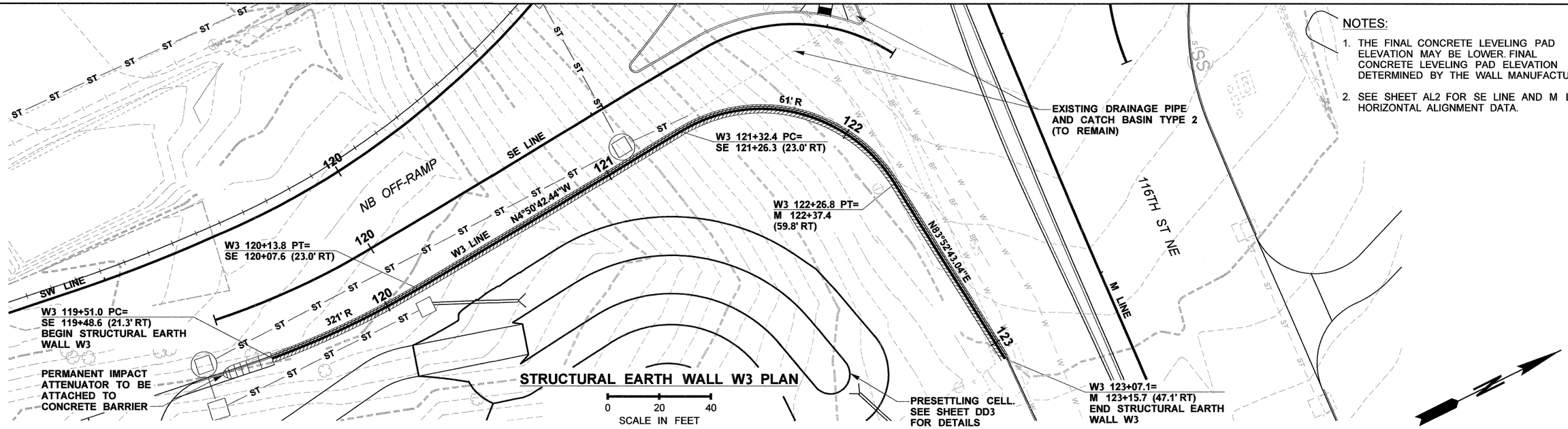

NOTES:

1. THE FINAL CONCRETE LEVELING PAD ELEVATION MAY BE LOWER. FINAL CONCRETE LEVELING PAD ELEVATION DETERMINED BY THE WALL MANUFACTURER.
2. SEE SHEET AL2 FOR SE LINE AND M LINE HORIZONTAL ALIGNMENT DATA.

WALL W3 QUANTITIES			
STD ITEM #	ITEM	UNIT	QUANTITY
4006	STRUCTURE EXCAVATION CLASS A INCL. HAUL	C.Y.	401
4119	SEW TRAFFIC BARRIER	L.F.	356
7169	STRUCTURAL EARTH WALL	S.F.	4590
7170	BACKFILL FOR STRUCTURAL EARTH WALL INCL. HAUL	C.Y.	2636

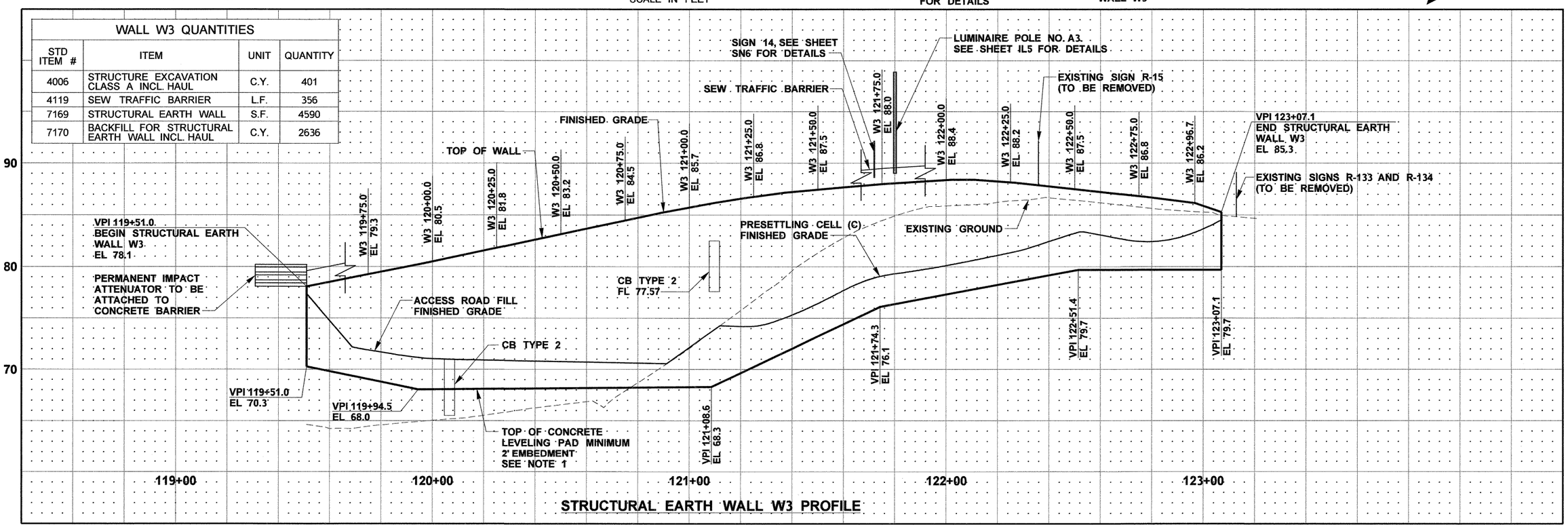

STRUCTURAL EARTH WALL W3 PROFILE

FILE NAME	U:\PSO\Projects\Clients\1598-TulalipTribes\554-1598-095 116th-Ph4-PSE\99Svcs\CADD\DGN\PS&ESheets\BL1598033_PS_WA.dgn
TIME	9:49:37 AM
DATE	8/30/2017
PLOTTED BY	purgabut
DESIGNED BY	M. TSUN
ENTERED BY	B. PURGANAN
CHECKED BY	J. MERTH
APPROVED BY	H. LONGFELLOW

REVISION	DATE	BY

REGION NO.	STATE	FED.AID PROJ.NO.
10	WASH	
JOB NUMBER		
CONTRACT NO.		LOCATION NO.

P.E. STAMP BOX — DATE

JOSEPH R. MERTH, STATE OF WASHINGTON, 33224, REGISTERED PROFESSIONAL ENGINEER — 8/30/17 DATE — P.E. STAMP BOX

TULALIP TRIBES — Parametrix

I-5 / 116TH STREET NE
INTERCHANGE IMPROVEMENTS
PHASE 4 RAMPS

RETAINING WALL PLAN AND PROFILE

Plot 7

PLAN REF. NO. WA3

SHEET 149 OF 238 SHEETS

NOTES:

1. SEE STAGING PLANS FOR WORK AREAS, TEMPORARY CHANNELIZATION LAYOUT, AND TYPICAL SECTIONS.
2. SEE SHEETS AL1 AND AL2 FOR ES LINE HORIZONTAL ALIGNMENT DATA.
3. THE TEMPORARY WALL SHALL ADHERE TO THE PERMANENT GEOSYNTHETIC WALL STANDARD PLAN D-3.09-00, TYPE 5. PERMANENT WALL FASCIA NOT REQUIRED.

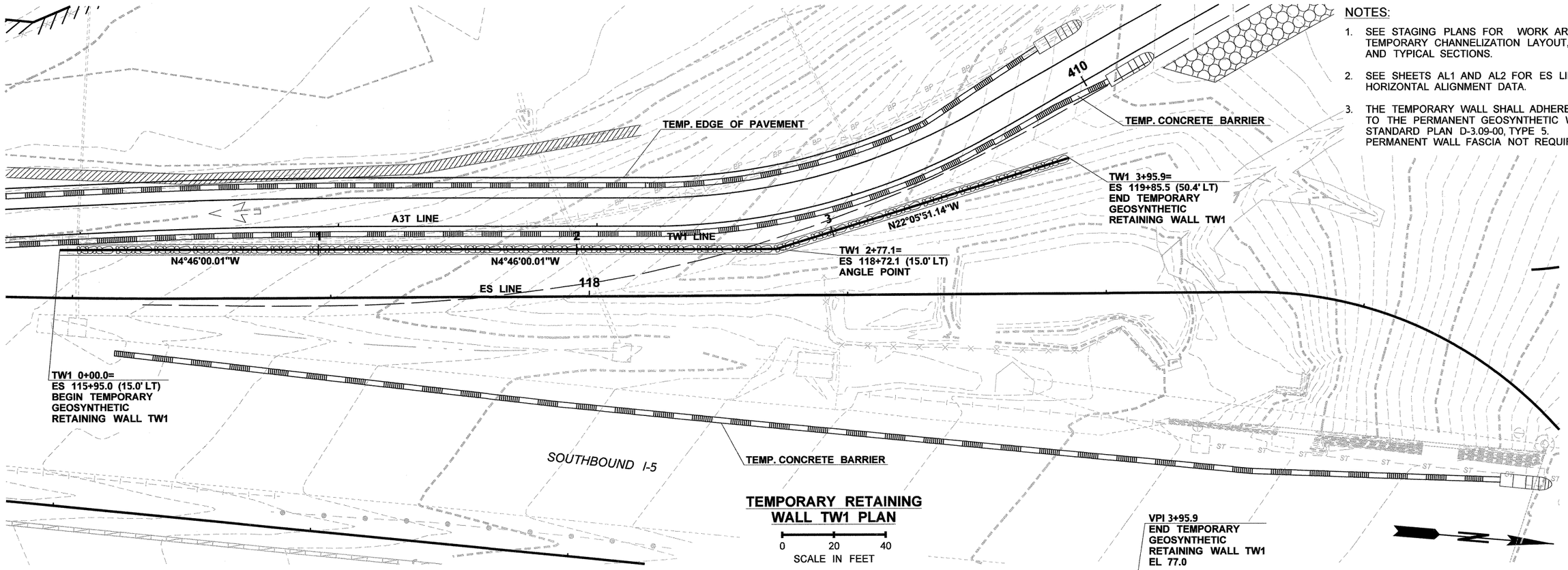

TEMPORARY RETAINING WALL TW1 PLAN

0 20 40
SCALE IN FEET

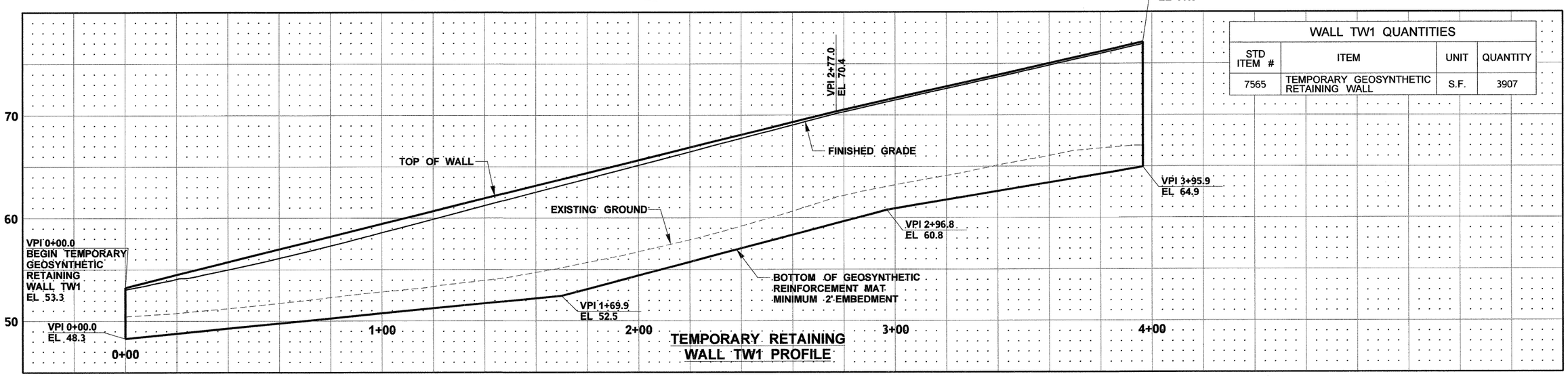

TEMPORARY RETAINING WALL TW1 PROFILE

WALL TW1 QUANTITIES			
STD ITEM #	ITEM	UNIT	QUANTITY
7565	TEMPORARY GEOSYNTHETIC RETAINING WALL	S.F.	3907

FILE NAME	U:\PSO\Projects\Clients\1598-TulalipTribes\554-1598-095 116th-Ph4-PSE\99Svcs\CADD\DGN\PS&ESheets\BL1598033_PS_WA.dgn
TIME	10:00:57 AM
DATE	8/30/2017
PLOTTED BY	purgabut
DESIGNED BY	M. TSUN
ENTERED BY	B. PURGANAN
CHECKED BY	J. MERTH
APPROVED BY	H. LONGFELLOW

REVISION | DATE | BY

REGION NO. 10 | STATE WASH | FED.AID PROJ.NO.

JOB NUMBER

CONTRACT NO. | LOCATION NO.

P.E. STAMP BOX — DATE

JOSEPH R. MERTH, STATE OF WASHINGTON, 33224, REGISTERED PROFESSIONAL ENGINEER — 8/30/17 DATE

P.E. STAMP BOX

TULALIP TRIBES — Parametrix

I-5 / 116TH STREET NE
INTERCHANGE IMPROVEMENTS
PHASE 4 RAMPS

TEMPORARY RETAINING WALL PLAN AND PROFILE

Plot 13

PLAN REF. NO. WA4

SHEET 150 OF 238 SHEETS

NOTE:

1. SEE STAGING PLANS FOR WORK AREAS, TEMPORARY CHANNELIZATION LAYOUT, AND TYPICAL SECTIONS.
2. SEE SHEETS AL2 AND AL3 FOR NE LINE HORIZONTAL ALIGNMENT DATA.
3. THE TEMPORARY WALL SHALL ADHERE TO THE PERMANENT GEOSYNTHETIC WALL STANDARD PLAN D-3.09-00, TYPE 5. PERMANENT WALL FASCIA NOT REQUIRED.

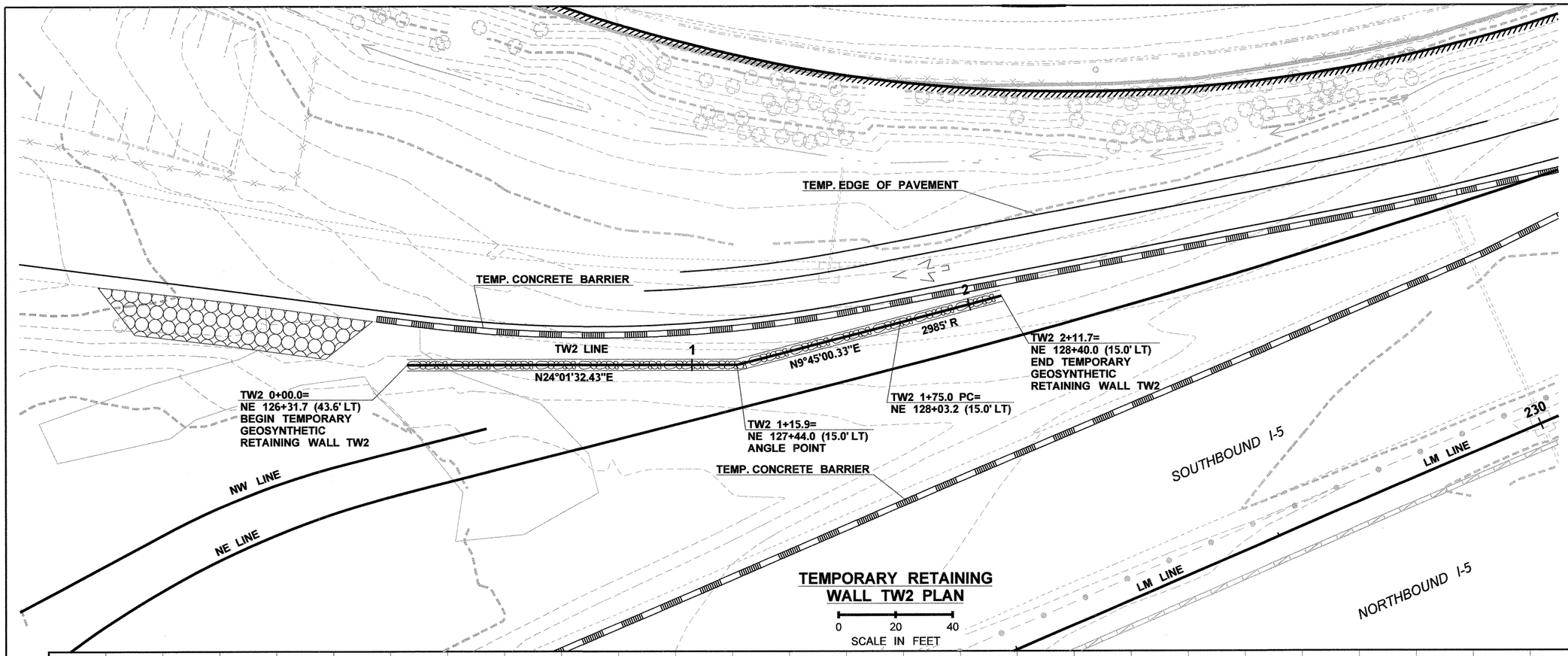

TEMPORARY RETAINING WALL TW2 PLAN

WALL TW2 QUANTITIES			
STD ITEM #	ITEM	UNIT	QUANTITY
7565	TEMPORARY GEOSYNTHETIC RETAINING WALL	S.F.	1547

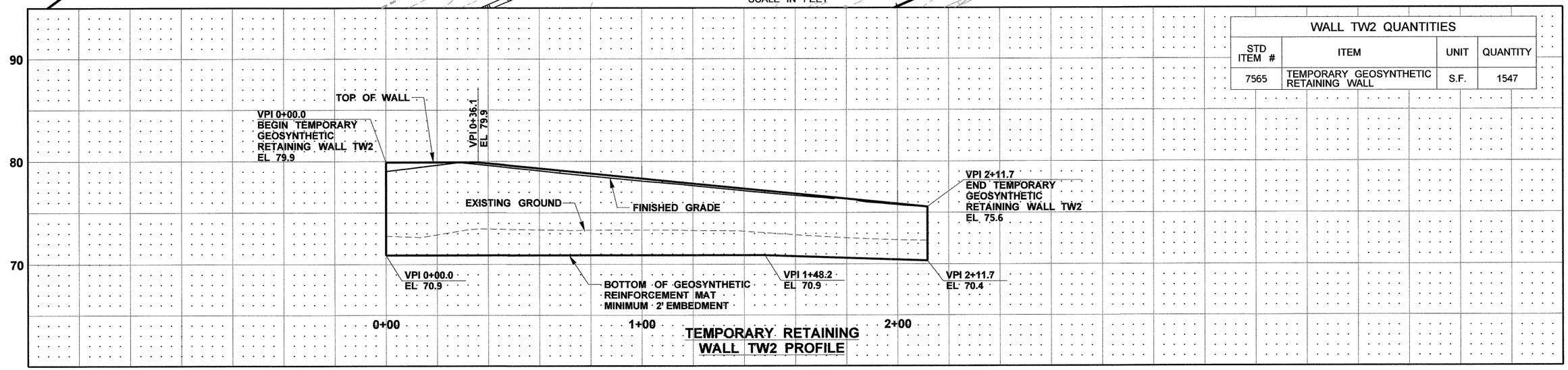

TEMPORARY RETAINING WALL TW2 PROFILE

FILE NAME	U:\PSO\Projects\Clients\1598-TulalipTribes\554-1598-095 116th-Ph4-PSE\99Svcs\CADD\DGN\PS&ESheets\BL1598033_PS_WA.dgn
TIME	10:01:19 AM
DATE	8/30/2017
PLOTTED BY	purgabut
DESIGNED BY	M. TSUN
ENTERED BY	B. PURGANAN
CHECKED BY	J. MERTH
APPROVED BY	H. LONGFELLOW

REVISION	DATE	BY

REGION NO.	STATE	FED.AID PROJ.NO.
10	WASH	
JOB NUMBER		
CONTRACT NO.		LOCATION NO.

P.E. STAMP BOX — DATE

JOSEPH R. MERTH — STATE OF WASHINGTON — 33224 — REGISTERED PROFESSIONAL ENGINEER

8/25/17 DATE

P.E. STAMP BOX

TULALIP TRIBES — Parametrix

I-5 / 116TH STREET NE INTERCHANGE IMPROVEMENTS PHASE 4 RAMPS

TEMPORARY RETAINING WALL PLAN AND PROFILE

Plot 14

PLAN REF. NO. WA5

SHEET 151 OF 238 SHEETS

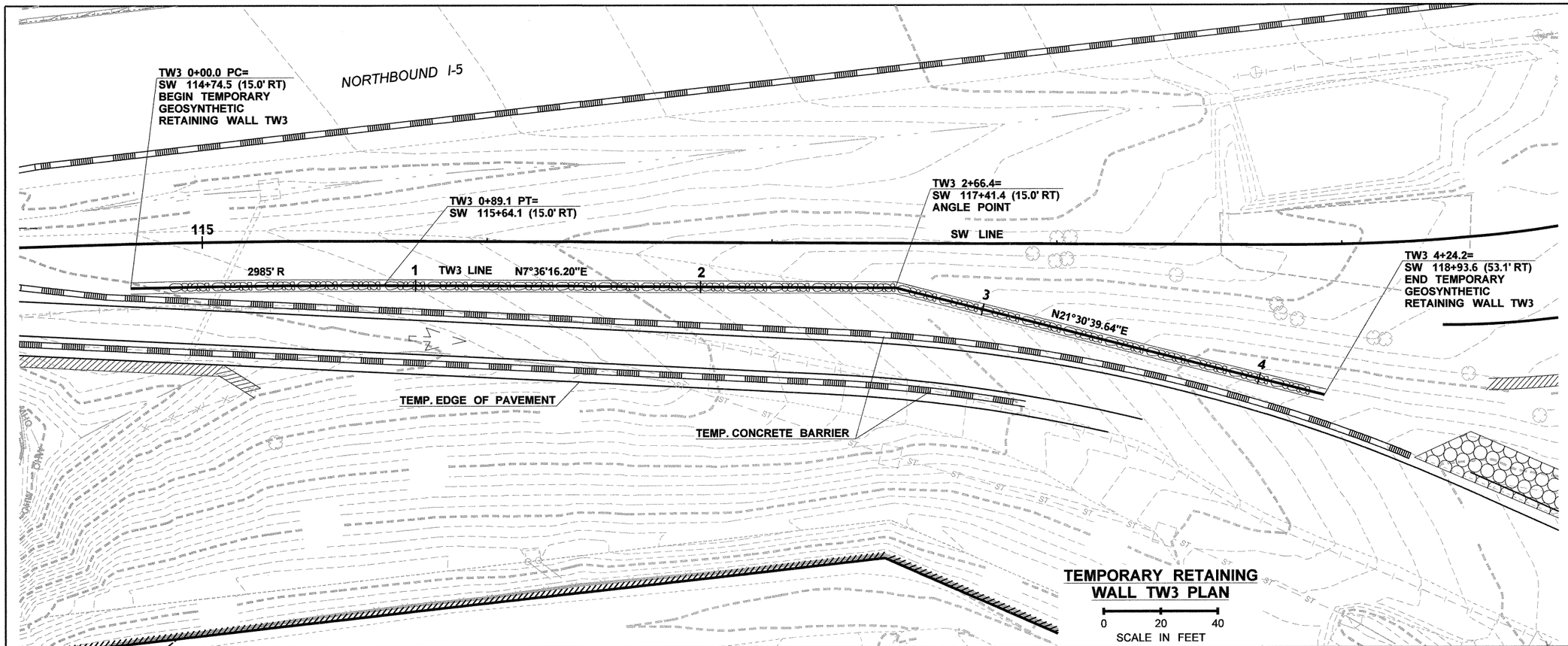

TEMPORARY RETAINING WALL TW3 PLAN

0 20 40
SCALE IN FEET

NOTE:

1. SEE STAGING PLANS FOR WORK AREAS, TEMPORARY CHANNELIZATION LAYOUT, AND TYPICAL SECTIONS.
2. SEE SHEETS AL1 AND AL2 FOR SW LINE HORIZONTAL ALIGNMENT DATA.
3. THE TEMPORARY WALL SHALL ADHERE TO THE PERMANENT GEOSYNTHETIC WALL STANDARD PLAN D-3.09-00, TYPE 5. PERMANENT WALL FASCIA NOT REQUIRED.

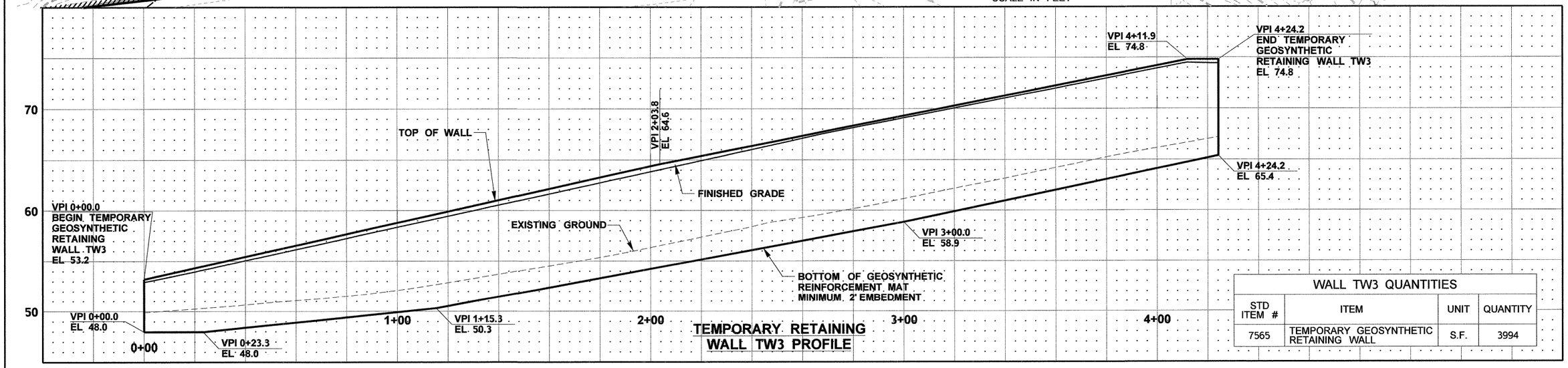

TEMPORARY RETAINING WALL TW3 PROFILE

WALL TW3 QUANTITIES			
STD ITEM #	ITEM	UNIT	QUANTITY
7565	TEMPORARY GEOSYNTHETIC RETAINING WALL	S.F.	3994

FILE NAME	U:\PSO\Projects\Clients\1598-TulalipTribes\554-1598-095 116th-Ph4-PSE\99Svcs\CADD\DGN\PS&ESheets\BL1598033_PS_WA.dgn
TIME	10:01:32 AM
DATE	8/30/2017
PLOTTED BY	purgabut
DESIGNED BY	M. TSUN
ENTERED BY	B. PURGANAN
CHECKED BY	J. MERTH
APPROVED BY	H. LONGFELLOW

REVISION	DATE	BY

REGION NO.	STATE	FED.AID PROJ.NO.
10	WASH	
JOB NUMBER		
CONTRACT NO.		LOCATION NO.

P.E. STAMP BOX — DATE

JOSEPH R. MERTH — STATE OF WASHINGTON — 33224 — REGISTERED PROFESSIONAL ENGINEER

P.E. STAMP BOX — DATE 8/30/17

TULALIP TRIBES — Parametrix

I-5 / 116TH STREET NE INTERCHANGE IMPROVEMENTS PHASE 4 RAMPS

TEMPORARY RETAINING WALL PLAN AND PROFILE

Plot 15

PLAN REF. NO. WA6

SHEET 152 OF 238 SHEETS

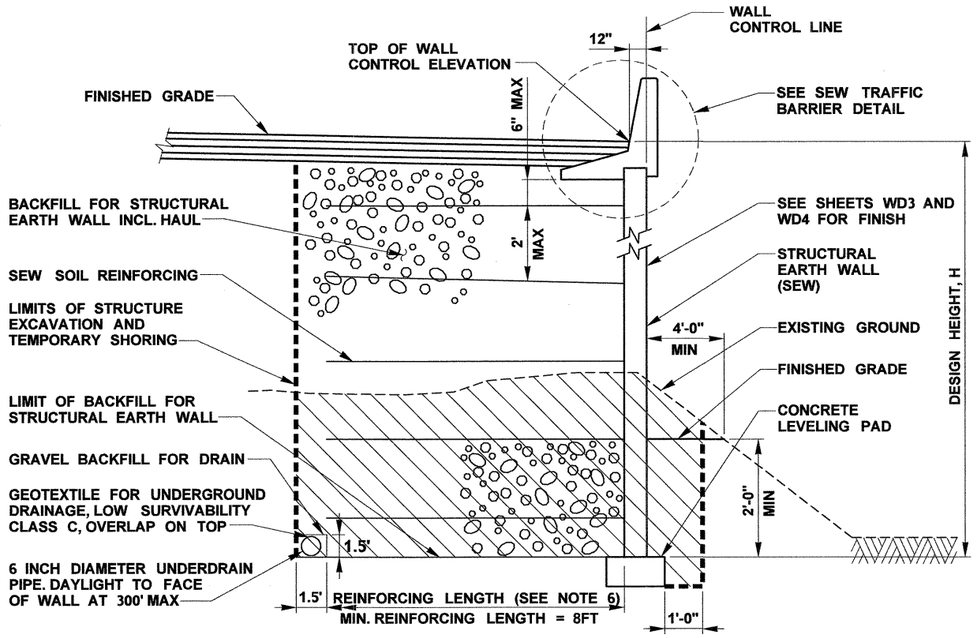

STRUCTURAL EARTH WALL TYPICAL SECTION

WALL W3
NOT TO SCALE

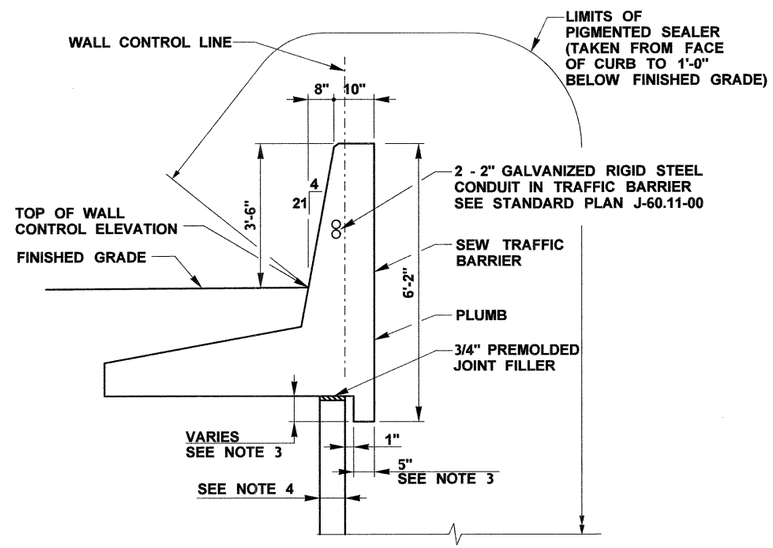

SEW TRAFFIC BARRIER

WALL W3
NOT TO SCALE

NOTES:

1. WALL REINFORCEMENT TO BE ADJUSTED ACCORDING TO THE WALL MANUFACTURER'S PREAPPROVED DETAILS TO ACCOMMODATE THE CULVERT.
2. EXISTING CULVERT SHALL BE TEMPORARILY SUPPORTED AND LEFT IN PLACE DURING WALL EXCAVATION / CONSTRUCTION.
3. SEW TRAFFIC BARRIER TO BE DESIGNED AND DETAILED BY WALL MANUFACTURER. BARRIER DESIGN AND DETAILING SHALL SATISFY TEST LEVEL 4 LOADING CRITERIA AND SHALL INCLUDE ANCHORAGES FOR TRAFFIC BARRIER MOUNTED SIGNS AND LUMINAIRES. SEE SHEETS WD, IL AND SN FOR TRAFFIC BARRIER MOUNTED SIGN AND LUMINAIRE DETAILS.
4. WALL SHALL HAVE PRECAST PANEL WITH AESTHETIC TREATMENTS AS DESCRIBED IN THE PLANS AND SPECIAL PROVISIONS. THICKNESS SHALL BE DETERMINED BY MANUFACTURER.
5. WALL EMBEDMENT DEPTH SHALL BE A MINIMUM OF 2-FEET WITH A LEVEL FRONT SLOPE.
6. SEE SPECIAL PROVISIONS FOR WALL DESIGN PROVISIONS AND PARAMETERS.

LEGEND:

STRUCTURE EXCAVATION CLASS A INCL. HAUL

STRUCTURE EXCAVATION AND TEMPORARY SHORING LIMITS

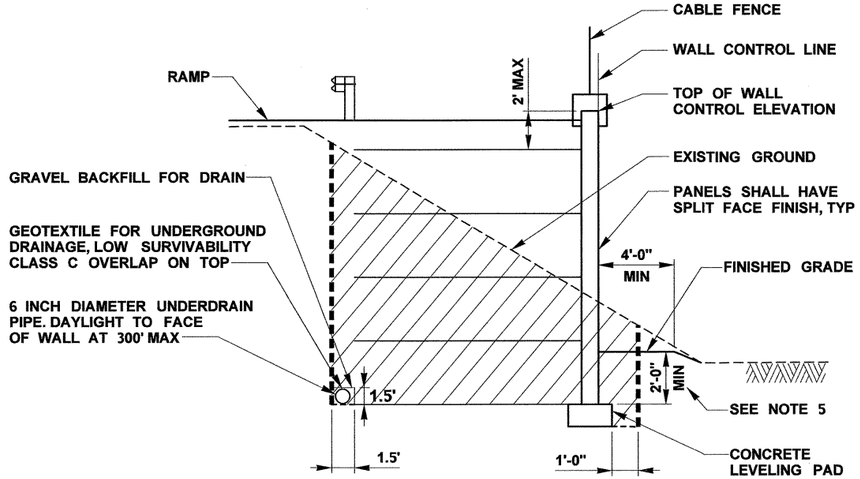

STRUCTURAL EARTH WALL TYP SECTION

WALLS W1 AND W2
NOT TO SCALE
(FOR INFORMATION NOT SHOWN, SEE STRUCTURAL EARTH WALL TYPICAL SECTION WALL W3)

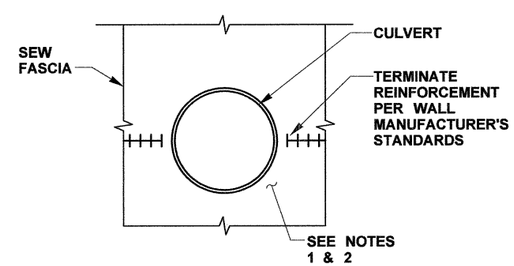

WALL DETAIL AT CULVERT

WALL W1
NOT TO SCALE

FILE NAME	U:\PSO\Projects\Clients\1598-TulalipTribes\554-1598-095 116th-Ph4-PSE\99Svcs\CADD\DGN\PS&ESheets\BL1598033_DE_WD.dgn						
TIME	10:04:45 AM				REGION NO. 10	STATE WASH	FED.AID PROJ.NO.
DATE	8/30/2017						
PLOTTED BY	purgabut				JOB NUMBER		
DESIGNED BY	M. TSUN						
ENTERED BY	B. PURGANAN				CONTRACT NO.		LOCATION NO.
CHECKED BY	J. MERTH						
APPROVED BY	H. LONGFELLOW						
		REVISION	DATE	BY			

P.E. STAMP BOX — DATE

JOSEPH R. MERTH, STATE OF WASHINGTON, 33224, REGISTERED PROFESSIONAL ENGINEER — 8/23/17 DATE — P.E. STAMP BOX

TULALIP TRIBES — Parametrix

I-5 / 116TH STREET NE
INTERCHANGE IMPROVEMENTS
PHASE 4 RAMPS

WALL DETAILS

Plot 1
PLAN REF NO WD1
SHEET 153 OF 238 SHEETS

NOTE:

1. WIDTH OF COPING (W) AND NOTCH (b) TO BE DETERMINED BY WALL MANUFACTURER.

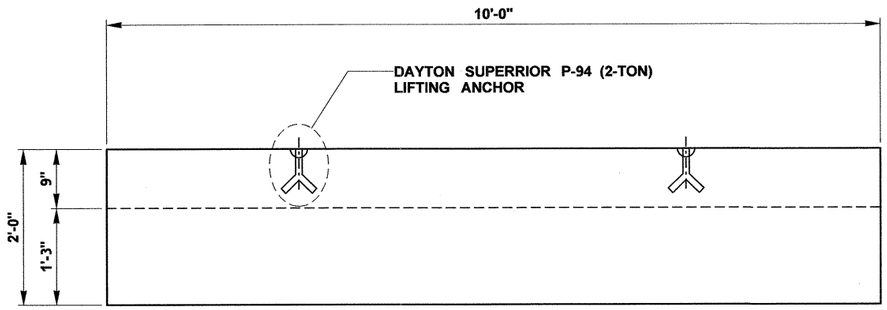

PRECAST COPING ELEVATION

NOT TO SCALE

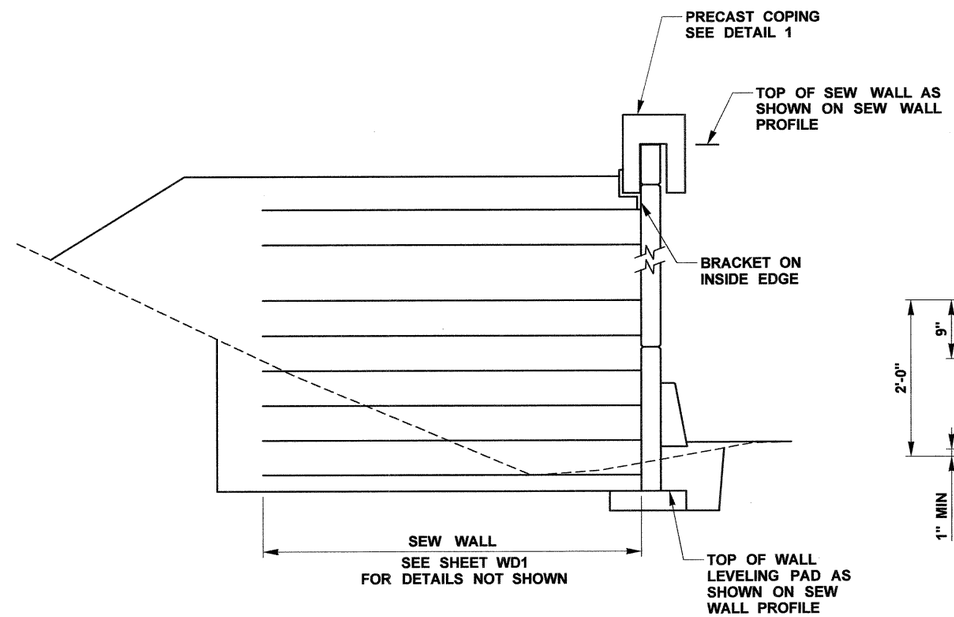

SEW WALL WITH COPING

NOT TO SCALE

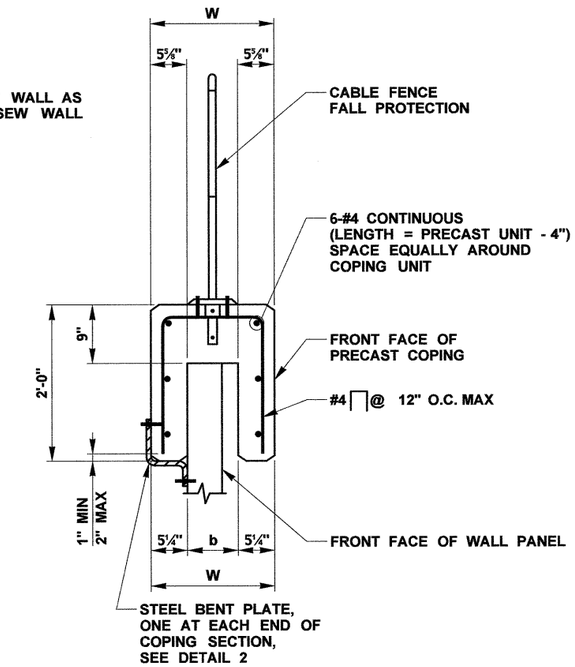

PRE-CAST COPING

DETAIL 1

NOT TO SCALE

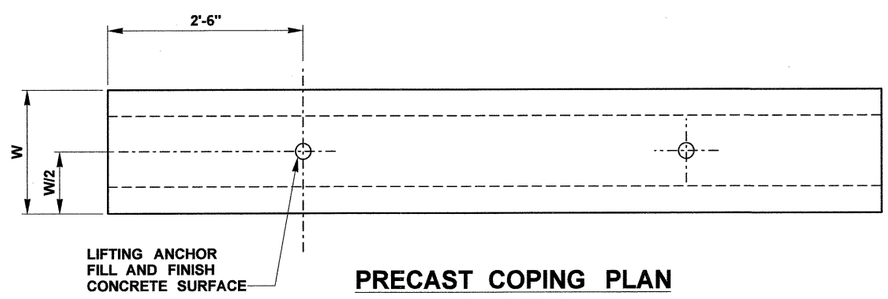

PRECAST COPING PLAN

NOT TO SCALE

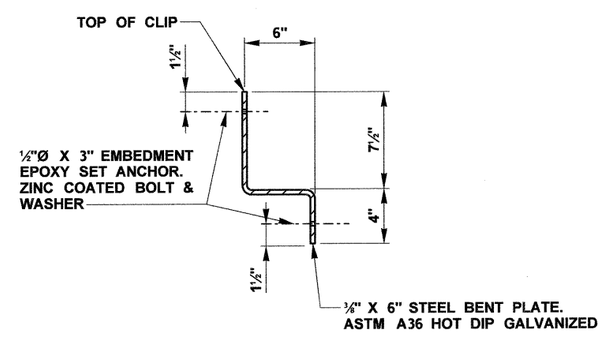

DETAIL 2

NOT TO SCALE

NOTES:

1. STANDARD COPING UNIT IS 10'-0" LONG WITH SQUARE ENDS. ALL SHORTER LENGTHS REQUIRING BEVELED ENDS SHALL BE FIELD CUT. PAINT ENDS OF CUT BARS WITH ZINC RICH PAINT.
2. COPING SHALL BE CLASS 4000 CONCRETE.

FILE NAME	U:\PSO\Projects\Clients\1598-TulalipTribes\554-1598-095 116th-Ph4-PSE\99Svcs\CADD\DGN\PS&ESheets\BL1598033_DE_WD.dgn
TIME	10:05:06 AM
DATE	8/30/2017
PLOTTED BY	purgabut
DESIGNED BY	B. ROGERS
ENTERED BY	B. PURGANAN
CHECKED BY	J. MERTH
APPROVED BY	H. LONGFELLOW

REVISION | DATE | BY

REGION NO. 10 | STATE WASH | FED.AID PROJ.NO.

JOB NUMBER

CONTRACT NO. | LOCATION NO.

P.E. STAMP BOX — DATE

JOSEPH R. MERTH, STATE OF WASHINGTON, 33224, REGISTERED PROFESSIONAL ENGINEER — 8/30/17 DATE — P.E. STAMP BOX

TULALIP TRIBES — Parametrix

I-5 / 116TH STREET NE INTERCHANGE IMPROVEMENTS PHASE 4 RAMPS

WALL DETAILS

Plot 2

PLAN REF NO WD2

SHEET 154 OF 238 SHEETS

ANCHORAGE BARLIST

MARK #	SIZE	LENGTH	BEND TYPE
A1	6	1'-9"	STRAIGHT
A2	6	5'-0"	STRAIGHT

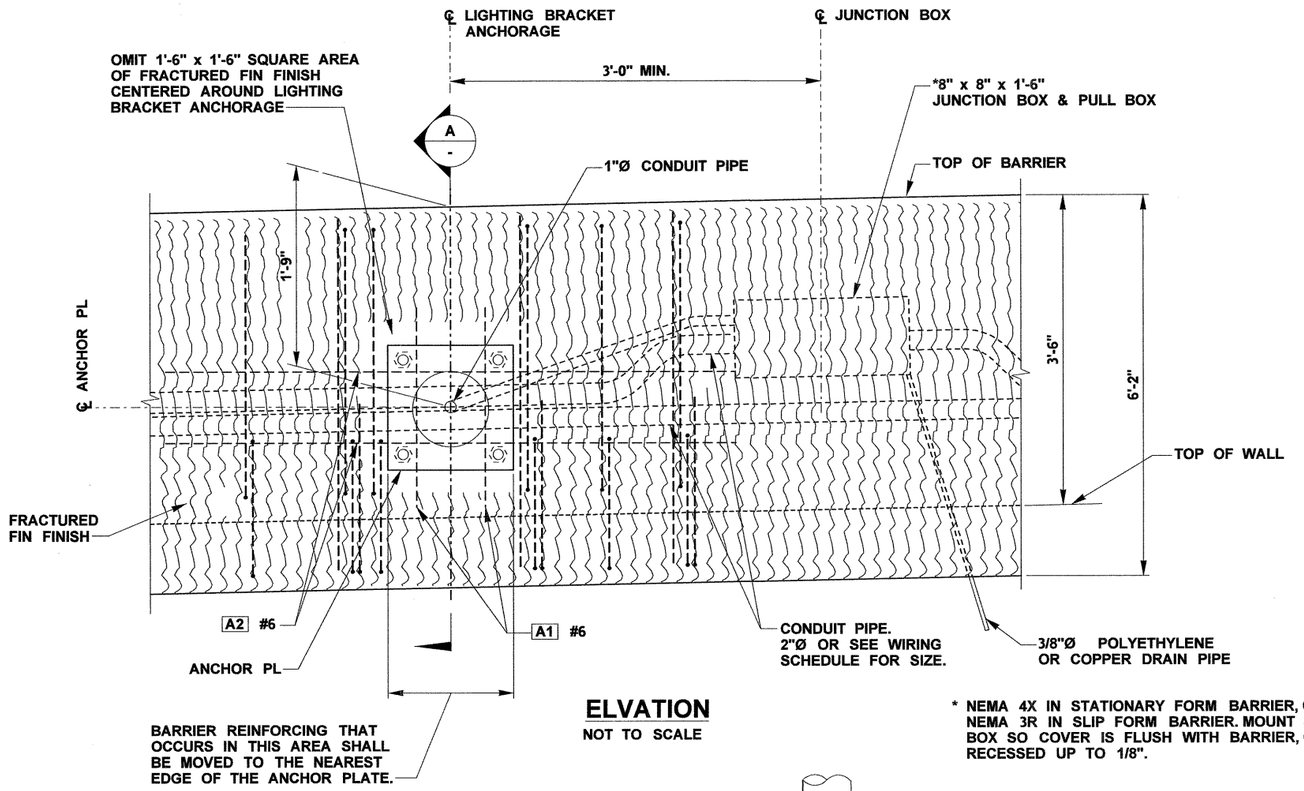

ELVATION

NOT TO SCALE

* NEMA 4X IN STATIONARY FORM BARRIER, OR NEMA 3R IN SLIP FORM BARRIER. MOUNT JUNCTION BOX SO COVER IS FLUSH WITH BARRIER, CAN BE RECESSED UP TO 1/8".

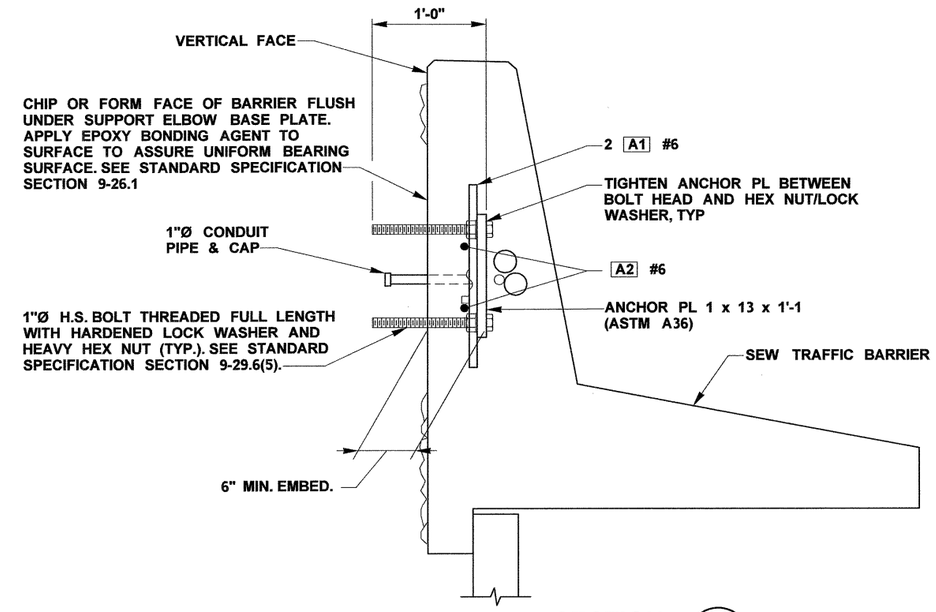

SECTION A -

NOT TO SCALE

(SEE SHEET WD1 FOR INFORMATION NOT SHOWN)

NOTE:
INSTALL ALL CONDUIT RUNS TO DRAIN TO A WALL END OR PROVIDE DRAIN AT ALL LOW POINTS WITHIN CONDUIT RUN. SEE SHEET WD1 FOR BARRIER DIMENSIONS.

LUMINAIRE POLE LOCATION ON WALL

STATION	OFFSET
SE 121+80	33.5' RT

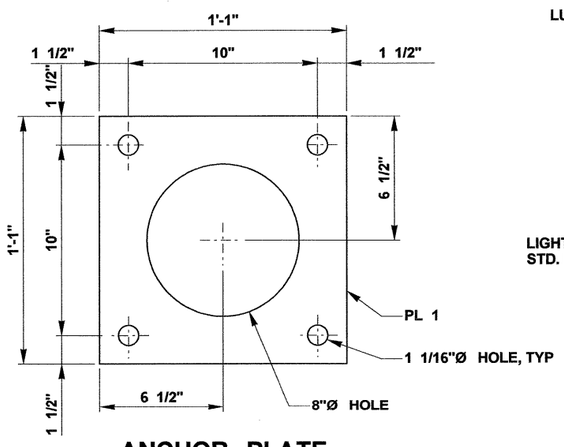

ANCHOR PLATE

GALVANIZE PER AASHTO M 111
NOT TO SCALE

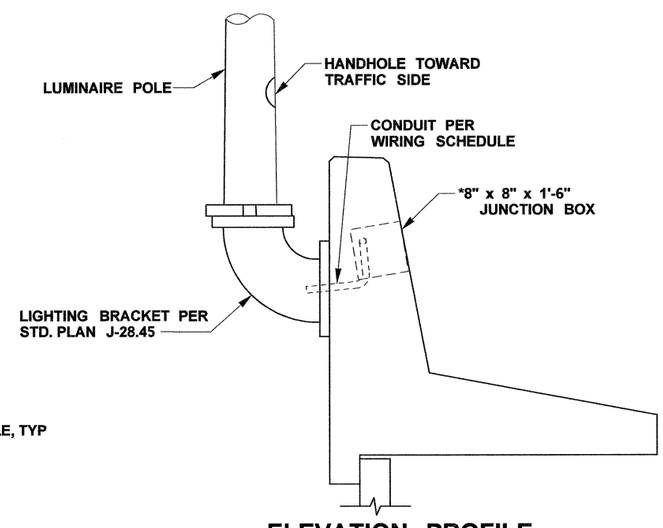

ELEVATION PROFILE LUMINAIRE SUPPORT

NOT TO SCALE

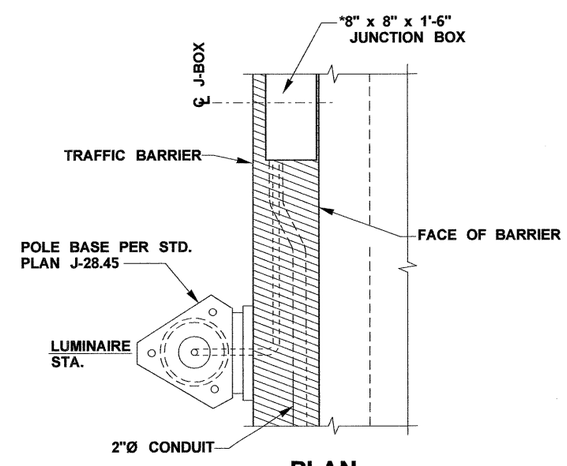

PLAN

NOT TO SCALE

FILE NAME	U:\PSO\Projects\Clients\1598-TulalipTribes\554-1598-095 116th-Ph4-PSE\99Svcs\CADD\DGN\PS&ESheets\BL1598033_DE_WD.dgn
TIME	10:05:15 AM
DATE	8/30/2017
PLOTTED BY	purgabut
DESIGNED BY	B. ROGERS
ENTERED BY	B. PURGANAN
CHECKED BY	J. MERTH
APPROVED BY	H. LONGFELLOW

REVISION	DATE	BY

REGION NO.	STATE	FED.AID PROJ.NO.
10	WASH	
JOB NUMBER		
CONTRACT NO.		LOCATION NO.

P.E. STAMP BOX — DATE

JOSEPH R. MERTH, STATE OF WASHINGTON, 33224, REGISTERED PROFESSIONAL ENGINEER — 8/30/17 DATE — P.E. STAMP BOX

TULALIP TRIBES — Parametrix

I-5 / 116TH STREET NE
INTERCHANGE IMPROVEMENTS
PHASE 4 RAMPS

SEW TRAFFIC BARRIER
LUMINAIRE ANCHORAGE DETAILS

Plot 3
PLAN REF NO WD3
SHEET 155 OF 238 SHEETS

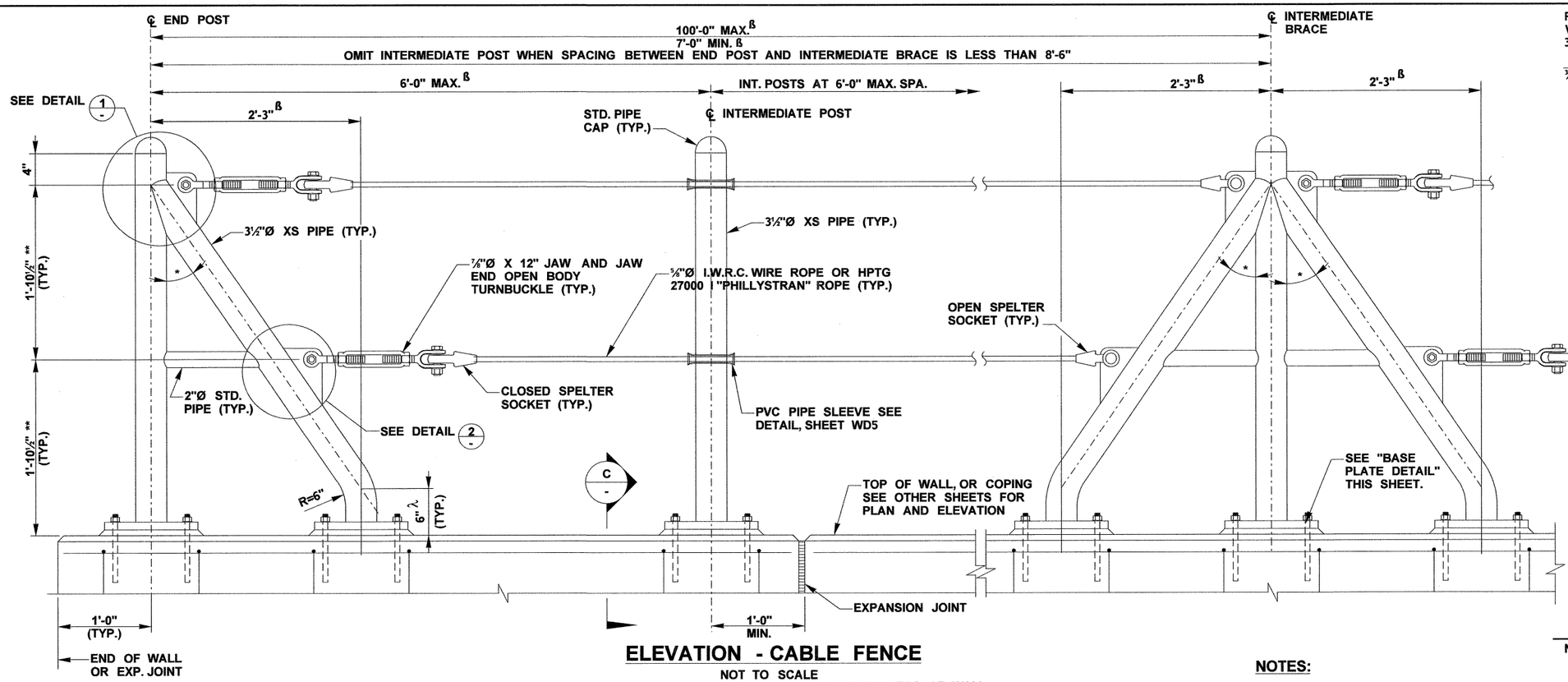

ELEVATION - CABLE FENCE

NOT TO SCALE

* ANGLES VARY WITH THE SLOPE OF THE TOP OF WALL.

** MEASURED PARALLEL TO THE POSTS.

λ MEASURED PERPENDICULAR TO THE TOP OF THE WALL.

ß MEASURED PARALLEL TO THE SLOPE OF THE TOP OF THE WALL.

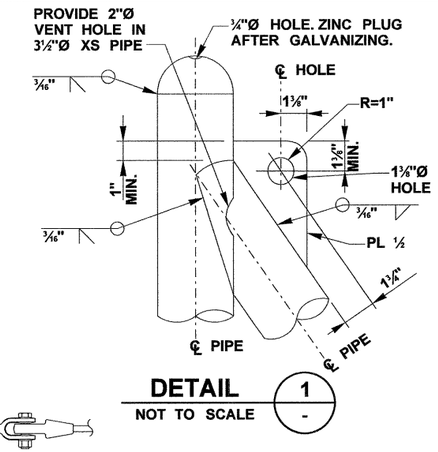

DETAIL 1/-

NOT TO SCALE

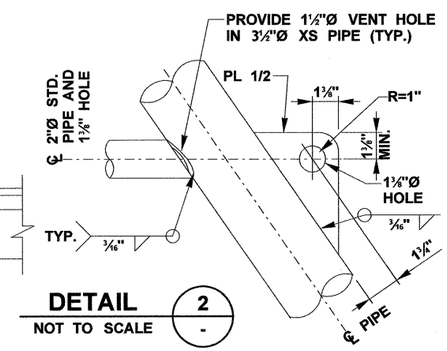

DETAIL 2/-

NOT TO SCALE

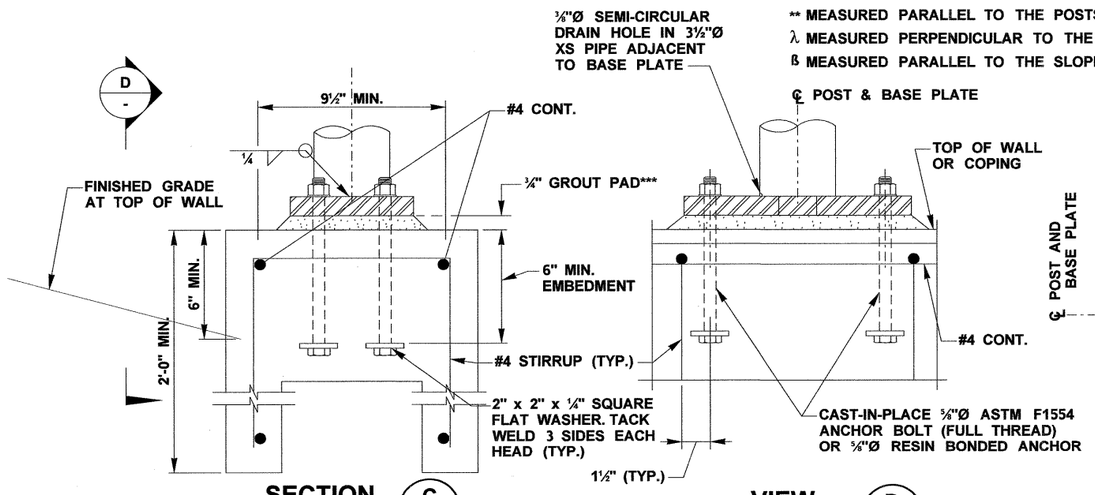

SECTION C/-

NOT TO SCALE

*** GROUT SHALL BE IN ACCORDANCE WITH SECTION 9-20.3 (2)

VIEW D/-

NOT TO SCALE

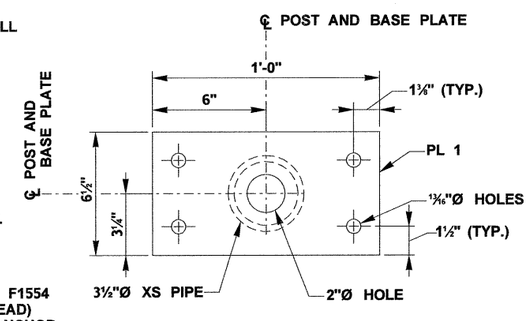

BASE PLATE DETAIL

NOT TO SCALE

NOTES:

1. ALL STEEL PIPE SHALL BE ASTM A53 GRADE B, TYPE E OR S, OR EQUIVALENT HSS ROUND TUBE ASTM A500 GRADE B.
2. ALL STEEL PLATES SHALL BE ASTM A36 OR ASTM A572.
3. WIRE ROPE SHALL CONSIST OF ZINC-COATED WIRES CONFORMING TO ASTM A 603, OR ASTM A 1023 WITH A PRESTRETCHED MODULUS OF ELASTICITY OF 15,000 KSI, OR "PHILLYSTRAN" ROPE.
4. ALL PARTS EXCEPT ROPE SHALL BE HOT DIP GALVANIZED IN ACCORDANCE WITH AASHTO M111, M232, OR ASTM F2329 AFTER FABRICATION, UNLESS NOTED OTHERWISE.
5. THE SPELTER SOCKETS AND SOCKETING PROCEDURE SHALL BE IN ACCORDANCE WITH THE SPELTER SOCKET AND ROPE MANUFACTURERS RECOMMENDATIONS.
6. ALL POSTS SHALL BE INSTALLED VERTICAL. ROPE SHALL BE INSTALLED PARALLEL TO TOP OF WALL.
7. ROPE SHALL BE INSTALLED TO 400 LBS TENSION LEAVING A TAKE UP OF 6" STILL AVAILABLE IN THE TURNBUCKLE. THE CONTRACTOR SHALL SUBMIT CABLE TENSIONING DETAILS TO THE ENGINEER FOR APPROVAL.
8. EACH CONTINUOUS LENGTH OF CABLE SHALL HAVE A TURNBUCKLE AT ONE END ONLY AND SHALL BE ANCHORED TO THE END POST OR INTERMEDIATE BRACE.
9. INTERMEDIATE, END POSTS, AND INTERMEDIATE BRACE SHALL NOT BE INSTALLED ACROSS AN EXPANSION JOINT.
10. CABLE FENCE WAS DESIGNED FOR A 200 LB. SERVICE LOAD ON THE TOP RAIL APPLIED IN ANY DIRECTION, IN ACCORDANCE WITH THE WASHINGTON ADMINISTRATIVE CODE 296-155-24615.
11. ROPE, SPELTER SOCKETS, TURNBUCKLES AND THEIR CONNECTIONS SHALL HAVE A MINIMUM BREAKING STRENGTH OF 26 KIPS.
12. SUPPLEMENTAL REQUIREMENTS S2, S3 AND S4 OF ASTM F1554 NEED NOT BE MET FOR THE ANCHOR BOLTS.
13. REINFORCEMENT SHOWN IS FOR ANCHOR BOLT CONNECTION ONLY. CONTRACTOR TO DESIGN ADDITIONAL REINFORCEMENT REQUIRED FOR COPING OR TOP OF WALL.

FILE NAME	U:\PSO\Projects\Clients\1598-TulalipTribes\554-1598-095 116th-Ph4-PSE\99Svcs\CADD\DGN\PS&ESheets\BL1598033_DE_WD.dgn					
TIME	10:05:28 AM				REGION NO. / STATE	FED.AID PROJ.NO.
DATE	8/30/2017				10 / WASH	
PLOTTED BY	purgabut				JOB NUMBER	
DESIGNED BY	B. ROGERS					
ENTERED BY	B. PURGANAN				CONTRACT NO.	LOCATION NO.
CHECKED BY	J. MERTH					
APPROVED BY	H. LONGFELLOW					
		REVISION	DATE	BY		

P.E. STAMP BOX — DATE

JOSEPH R. MERTH — STATE OF WASHINGTON — 33224 — REGISTERED PROFESSIONAL ENGINEER — 8/30/17 DATE

TULALIP TRIBES — Parametrix

I-5 / 116TH STREET NE INTERCHANGE IMPROVEMENTS PHASE 4 RAMPS

CABLE FENCE DETAILS

Plot 4

PLAN REF NO WD4

SHEET 156 OF 238 SHEETS

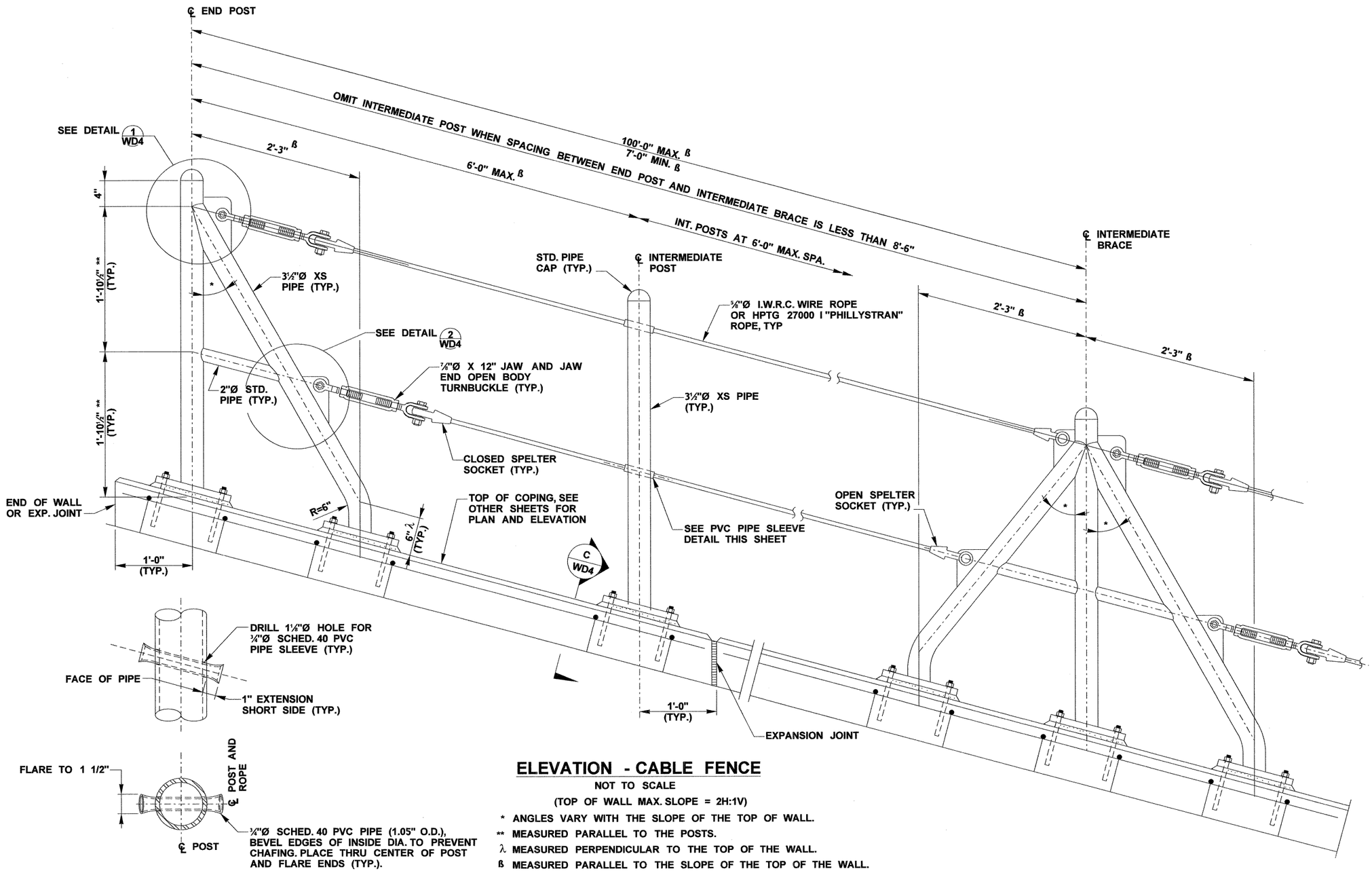

ELEVATION - CABLE FENCE

NOT TO SCALE

(TOP OF WALL MAX. SLOPE = 2H:1V)

* ANGLES VARY WITH THE SLOPE OF THE TOP OF WALL.

** MEASURED PARALLEL TO THE POSTS.

λ MEASURED PERPENDICULAR TO THE TOP OF THE WALL.

ß MEASURED PARALLEL TO THE SLOPE OF THE TOP OF THE WALL.

PVC PIPE SLEEVE DETAIL

NOT TO SCALE

FILE NAME	U:\PSO\Projects\Clients\1598-TulalipTribes\554-1598-095 116th-Ph4-PSE\99Svcs\CADD\DGN\PS&ESheets\BL1598033_DE_WD.dgn
TIME	10:05:37 AM
DATE	8/30/2017
PLOTTED BY	purgabut
DESIGNED BY	B. ROGERS
ENTERED BY	B. PURGANAN
CHECKED BY	J. MERTH
APPROVED BY	H. LONGFELLOW

REVISION	DATE	BY

REGION NO.	STATE	FED.AID PROJ.NO.
10	WASH	
JOB NUMBER		
CONTRACT NO.		LOCATION NO.

P.E. STAMP BOX — DATE

JOSEPH R. MERTH, STATE OF WASHINGTON, 33224, REGISTERED PROFESSIONAL ENGINEER — 8/30/17 DATE

P.E. STAMP BOX

TULALIP TRIBES — Parametrix

I-5 / 116TH STREET NE INTERCHANGE IMPROVEMENTS PHASE 4 RAMPS

CABLE FENCE DETAILS

Plot 5

PLAN REF NO WD5

SHEET 157 OF 238 SHEETS

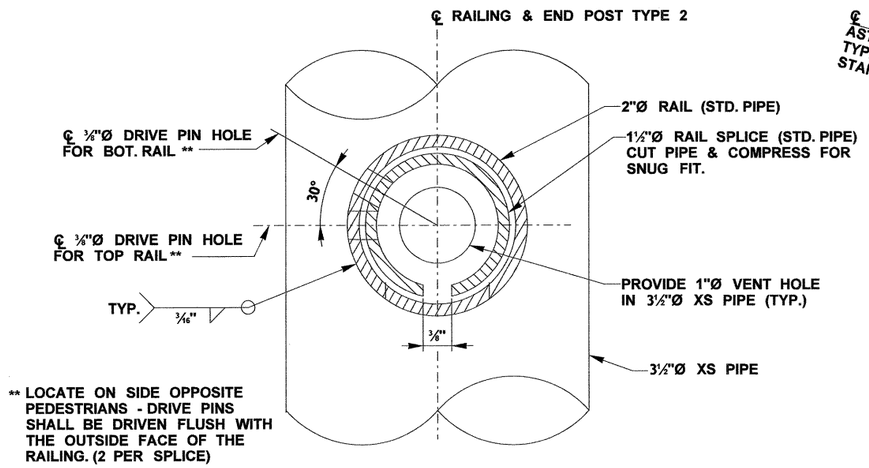

SECTION C/-

NOT TO SCALE

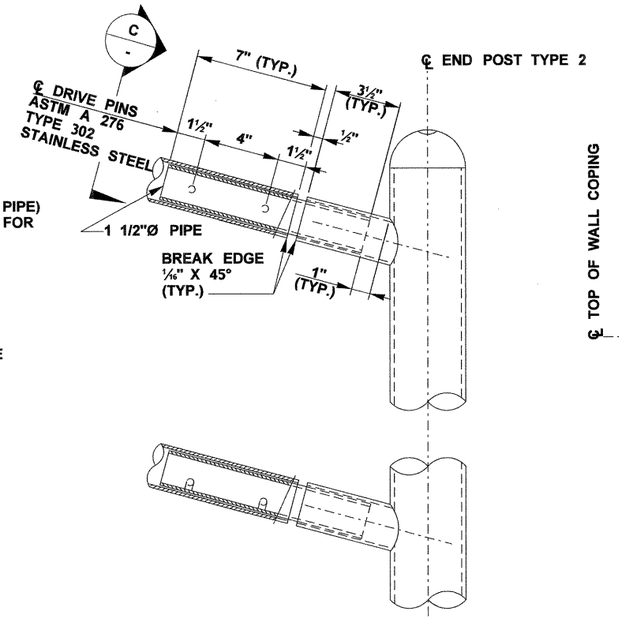

DETAIL 4/-

NOT TO SCALE
OPTIONAL RAIL SPLICE

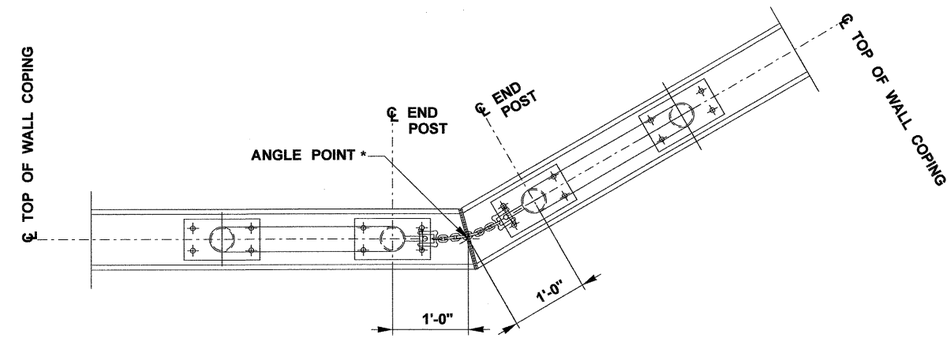

CHAIN CONNECTION PLAN

NOT TO SCALE
ROPE NOT SHOWN FOR CLARITY

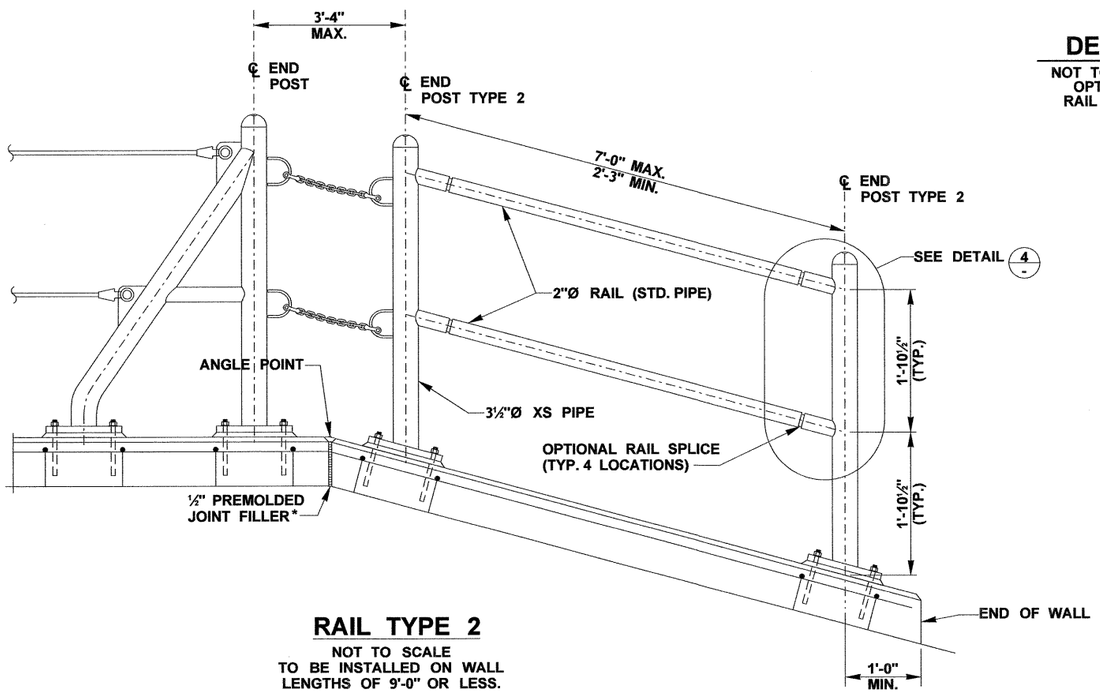

RAIL TYPE 2

NOT TO SCALE
TO BE INSTALLED ON WALL
LENGTHS OF 9'-0" OR LESS.

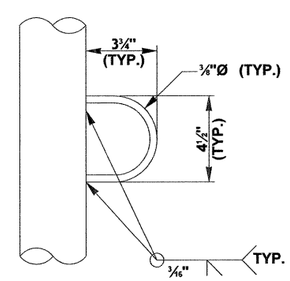

DETAIL 3/-

NOT TO SCALE
RETAINER LOOP

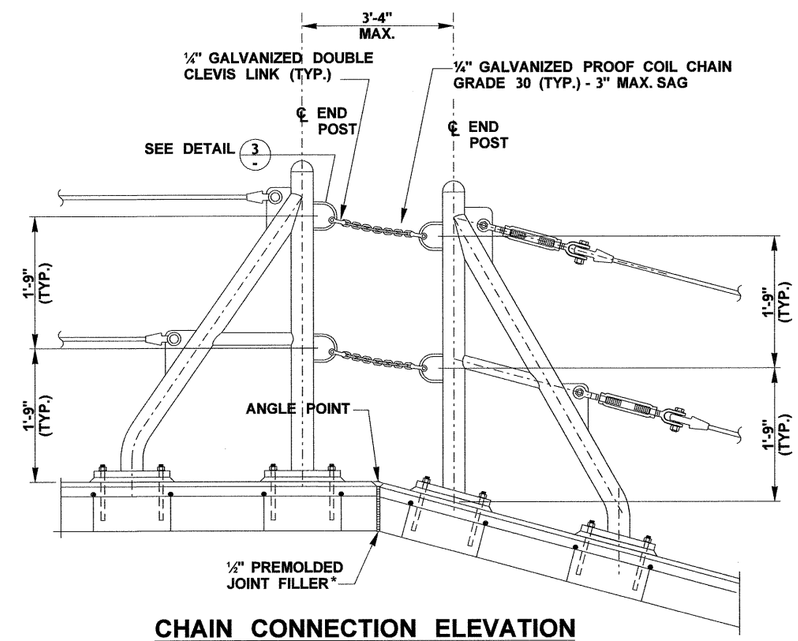

CHAIN CONNECTION ELEVATION

NOT TO SCALE
TO BE INSTALLED ACROSS WALL ANGLE POINTS, BOTH VERTICAL AND HORIZONTAL.

* SEE CONTRACT PLANS FOR JOINT LOCATIONS.

FILE NAME	U:\PSO\Projects\Clients\1598-TulalipTribes\554-1598-095 116th-Ph4-PSE\99Svcs\CADD\DGN\PS&ESheets\BL1598033_DE_WD.dgn					
TIME	10:05:45 AM					
DATE	8/30/2017					
PLOTTED BY	purgabut					
DESIGNED BY	B. ROGERS					
ENTERED BY	B. PURGANAN					
CHECKED BY	J. MERTH					
APPROVED BY	H. LONGFELLOW					
		REVISION	DATE	BY		

REGION NO.	STATE	FED.AID PROJ.NO.
10	WASH	
JOB NUMBER		
CONTRACT NO.		LOCATION NO.

P.E. STAMP BOX — DATE

JOSEPH R. MERTH — STATE OF WASHINGTON — 33224 — REGISTERED PROFESSIONAL ENGINEER — 8/30/17

P.E. STAMP BOX — DATE

TULALIP TRIBES — Parametrix

I-5 / 116TH STREET NE
INTERCHANGE IMPROVEMENTS
PHASE 4 RAMPS

CABLE FENCE DETAILS

Plot 6

PLAN REF NO WD6

SHEET 158 OF 238 SHEETS

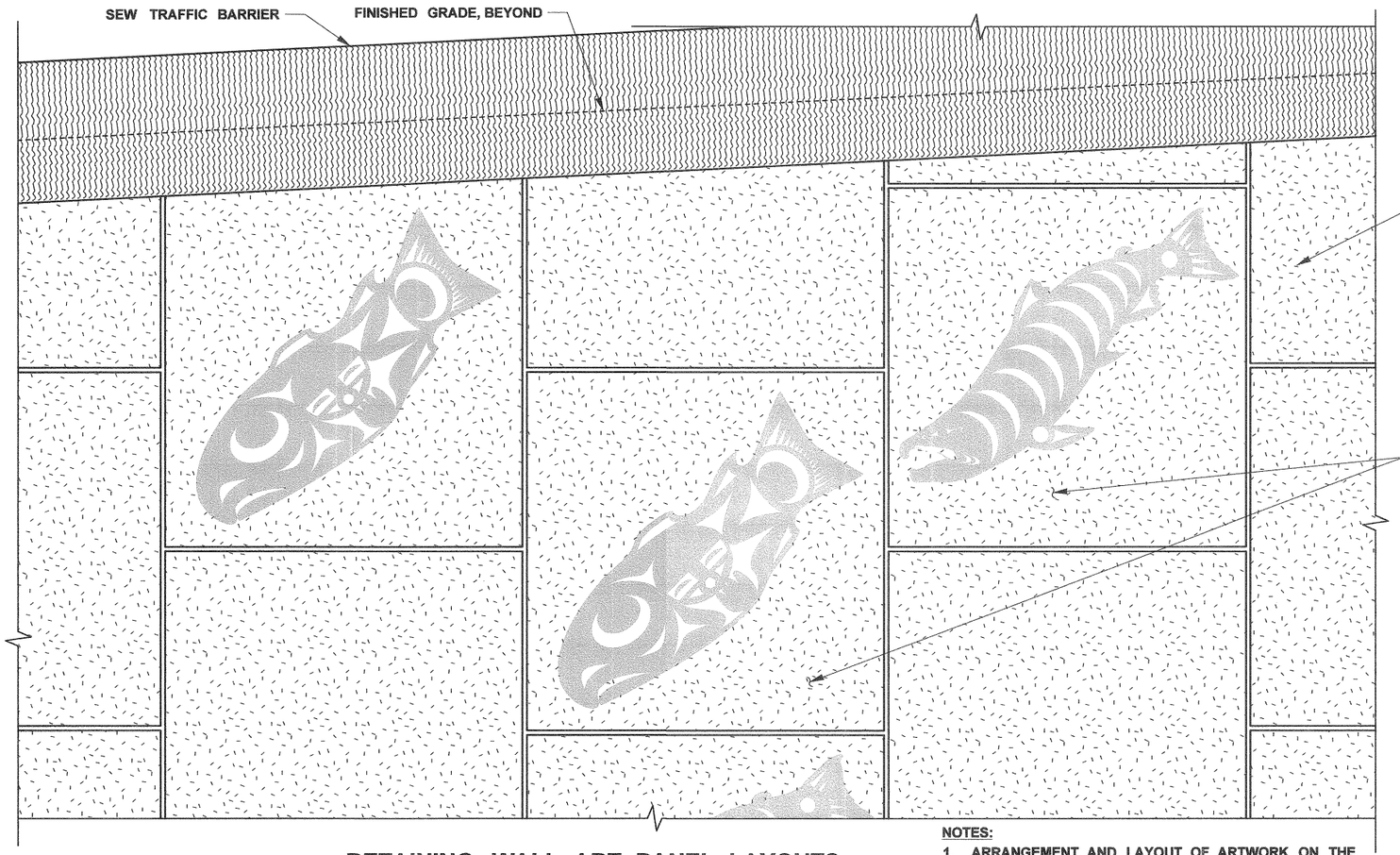

RETAINING WALL ART PANEL LAYOUTS

SCALE: 1"=2'

NOTES:

1. ARRANGEMENT AND LAYOUT OF ARTWORK ON THE WALLS SHOWN HERE IS FOR BIDDING PUROSES ONLY. FINAL ART LAYOUTS WILL BE SUPPLIED BY CONTRACTING AGENCY.
2. ALL EXPOSED WALL SURFACES SHALL RECEIVE PIGMENTED SEALER. SEE SPECIAL PROVISIONS.

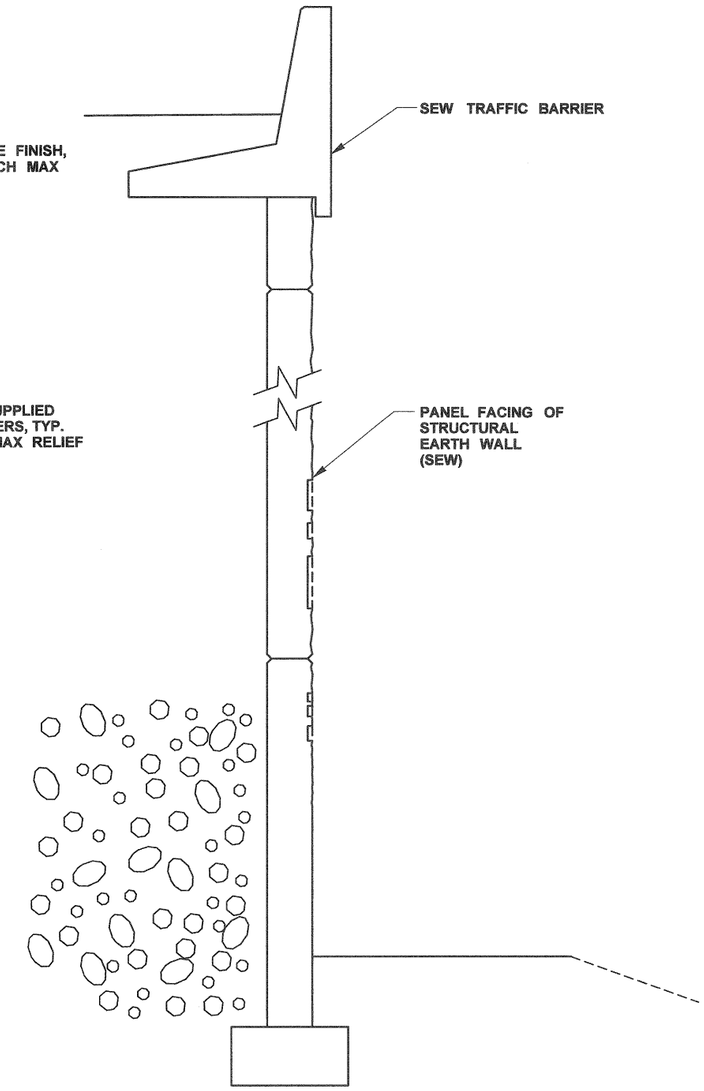

EXTENT OF TREATMENT - RETAINING WALL

SECTION VIEW
SCALE: 1"=10'

FILE NAME	U:\PSO\Projects\Clients\1598-TulalipTribes\554-1598-095 116th-Ph4-PSE\99Svcs\CADD\DGN\PS&ESheets\BL1598033_DE_WD7.dgn						
TIME	10:06:56 AM				REGION NO.	STATE	FED.AID PROJ.NO.
DATE	8/30/2017				10	WASH	
PLOTTED BY	purgabut				JOB NUMBER		
DESIGNED BY	J. SWENSON						
ENTERED BY	B. PURGANAN						
CHECKED BY	J. MERTH				CONTRACT NO.		LOCATION NO.
APPROVED BY	H. LONGFELLOW						
		REVISION	DATE	BY			

P.E. STAMP BOX — DATE

JOSEPH R. MERTH — STATE OF WASHINGTON — 33224 — REGISTERED PROFESSIONAL ENGINEER

P.E. STAMP BOX — 8/30/17 DATE

TULALIP TRIBES — Parametrix

I-5 / 116TH STREET NE
INTERCHANGE IMPROVEMENTS
PHASE 4 RAMPS

WALL DETAILS

Plot 3

PLAN REF NO WD7

SHEET 159 OF 238 SHEETS

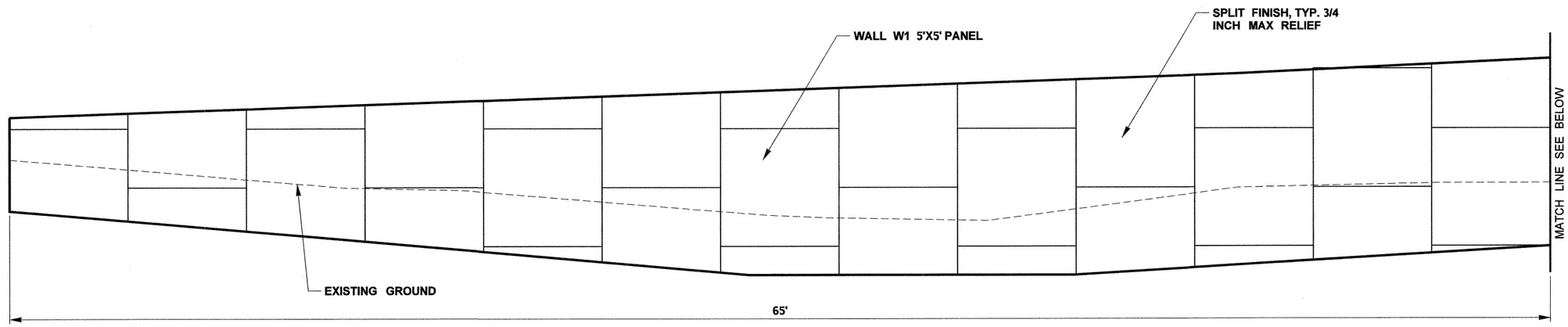

WALL W1 PANEL LAYOUT

HORIZ AND VERT SCALE: 1"=10'

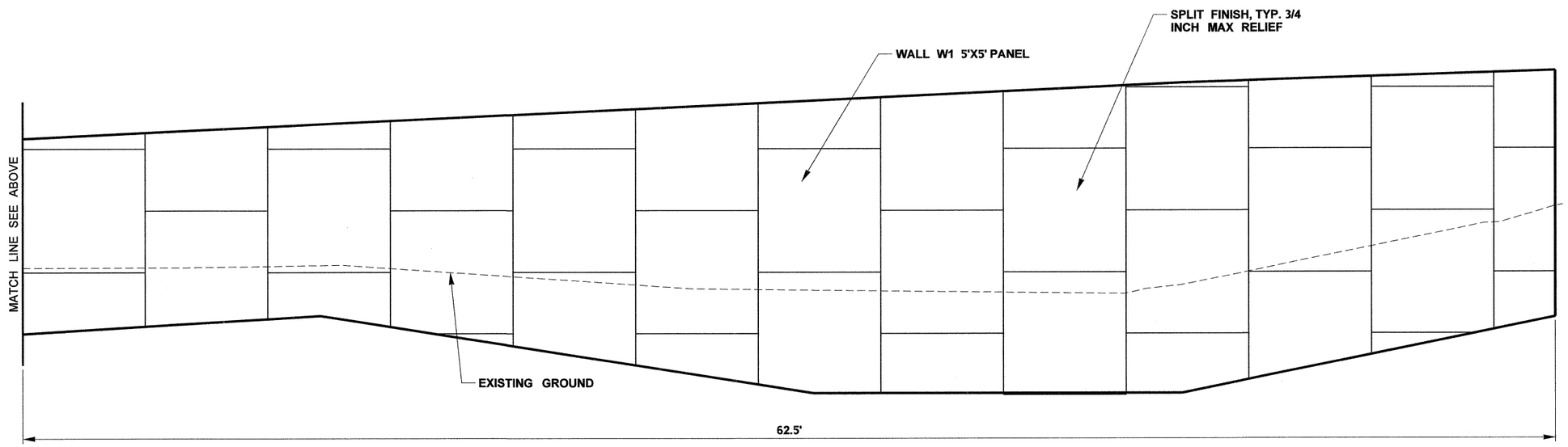

WALL W1 PANEL LAYOUT

HORIZ AND VERT SCALE: 1"=10'

FILE NAME	U:\PSO\Projects\Clients\1598-TulalipTribes\554-1598-095 116th-Ph4-PSE\99Svcs\CADD\DGN\PS&ESheets\BL1598033_DE_WD7.dgn				REGION NO.	STATE	FED.AID PROJ.NO.
TIME	10:07:07 AM				10	WASH	
DATE	8/30/2017				JOB NUMBER		
PLOTTED BY	purgabut						
DESIGNED BY	M. TSUN				CONTRACT NO.		LOCATION NO.
ENTERED BY	B. PURGANAN						
CHECKED BY	J. MERTH						
APPROVED BY	H. LONGFELLOW						
		REVISION	DATE	BY			

P.E. STAMP BOX — DATE

JOSEPH R. MERTH — STATE OF WASHINGTON — 33224 — REGISTERED PROFESSIONAL ENGINEER

8/30/17 DATE

P.E. STAMP BOX

TULALIP TRIBES — Parametrix

I-5 / 116TH STREET NE INTERCHANGE IMPROVEMENTS PHASE 4 RAMPS

WALL DETAILS

Plot 4

PLAN REF NO WD8

SHEET 160 OF 238 SHEETS

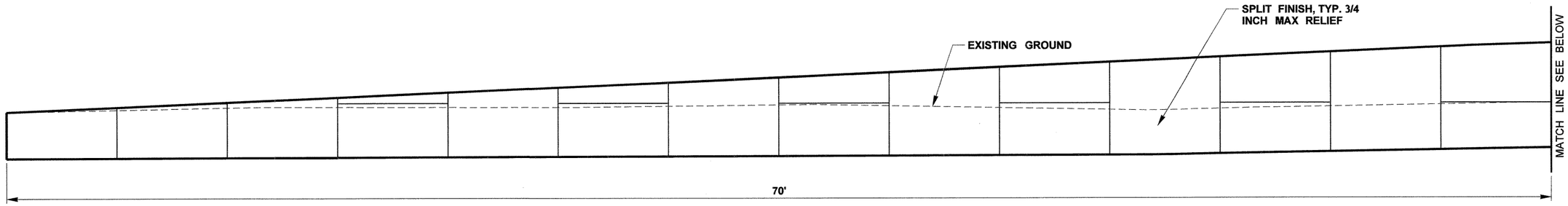

WALL W2 PANEL LAYOUT

HORIZ AND VERT SCALE: 1"=10'

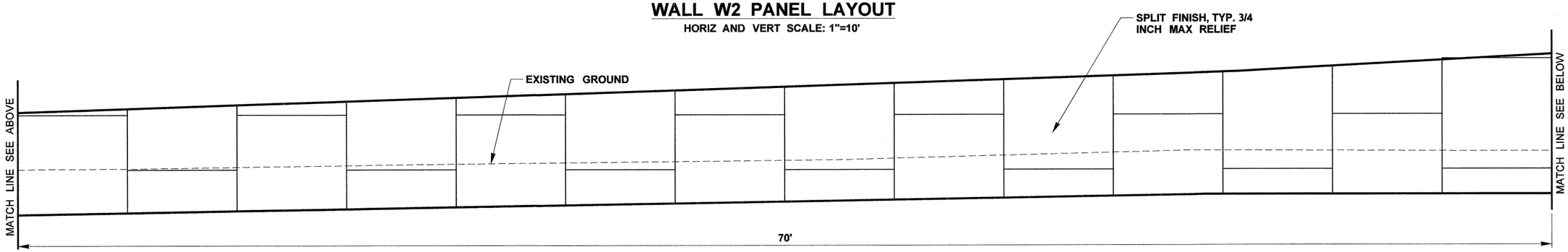

WALL W2 PANEL LAYOUT

HORIZ AND VERT SCALE: 1"=10'

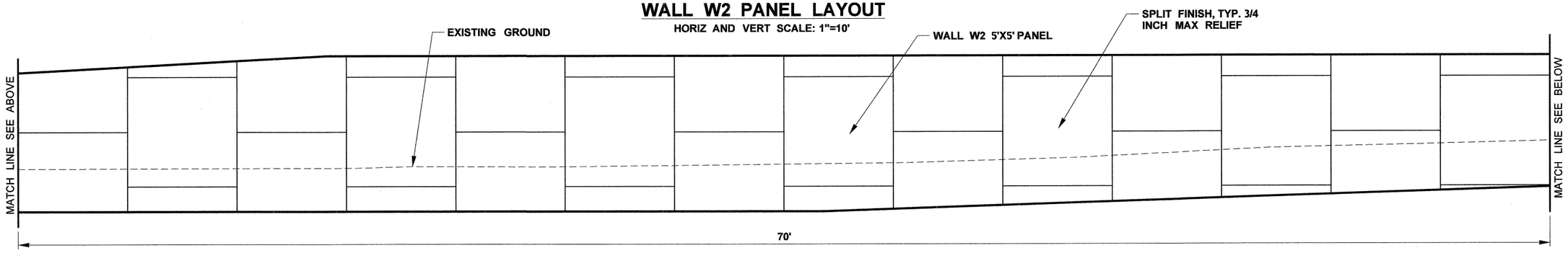

WALL W2 PANEL LAYOUT

HORIZ AND VERT SCALE: 1"=10'

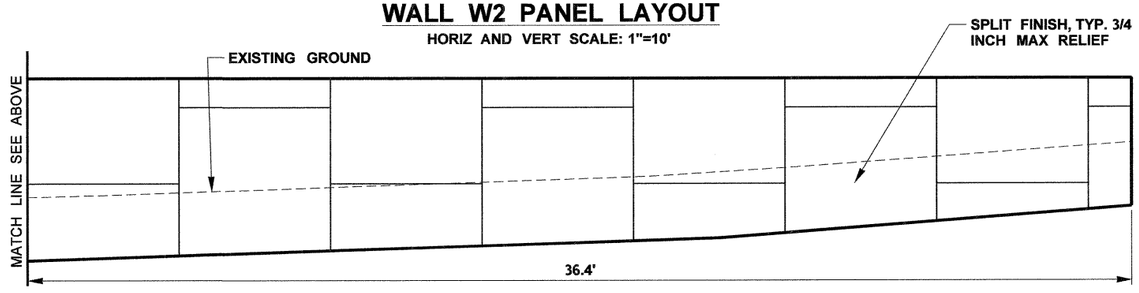

WALL W2 PANEL LAYOUT

HORIZ AND VERT SCALE: 1"=10'

FILE NAME	U:\PSO\Projects\Clients\1598-TulalipTribes\554-1598-095 116th-Ph4-PSE\99Svcs\CADD\DGN\PS&ESheets\BL1598033_DE_WD7.dgn
TIME	10:07:15 AM
DATE	8/30/2017
PLOTTED BY	purgabut
DESIGNED BY	M. TSUN
ENTERED BY	B. PURGANAN
CHECKED BY	J. MERTH
APPROVED BY	H. LONGFELLOW

REVISION	DATE	BY

REGION NO.	STATE	FED.AID PROJ.NO.
10	WASH	
JOB NUMBER		
CONTRACT NO.		LOCATION NO.

P.E. STAMP BOX — DATE

JOSEPH R. MERTH — STATE OF WASHINGTON — 33224 — REGISTERED PROFESSIONAL ENGINEER

8/30/17 DATE

P.E. STAMP BOX

TULALIP TRIBES — Parametrix

I-5 / 116TH STREET NE INTERCHANGE IMPROVEMENTS PHASE 4 RAMPS

WALL DETAILS

Plot 5

PLAN REF NO **WD9**

SHEET 161 OF 238 SHEETS

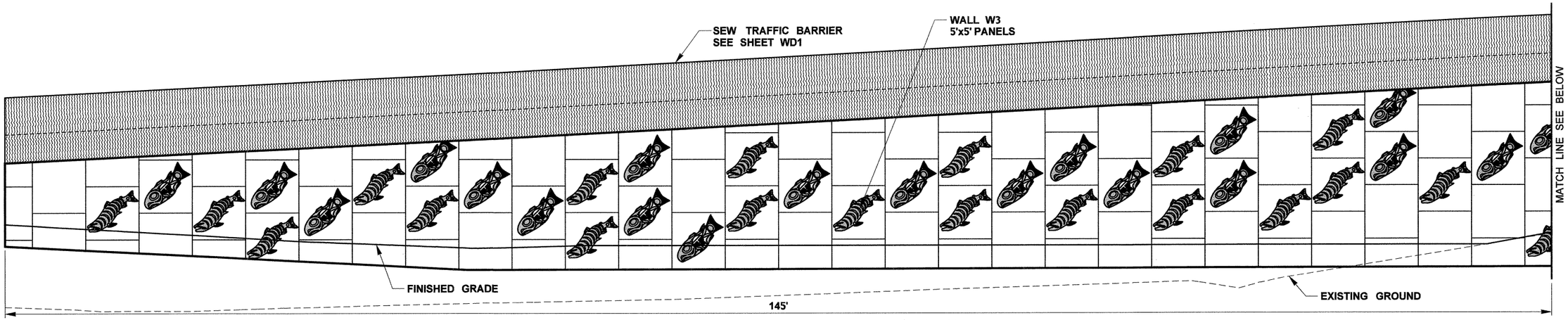

WALL W3 PANEL LAYOUT

HORIZ AND VERT SCALE: 1"=10'

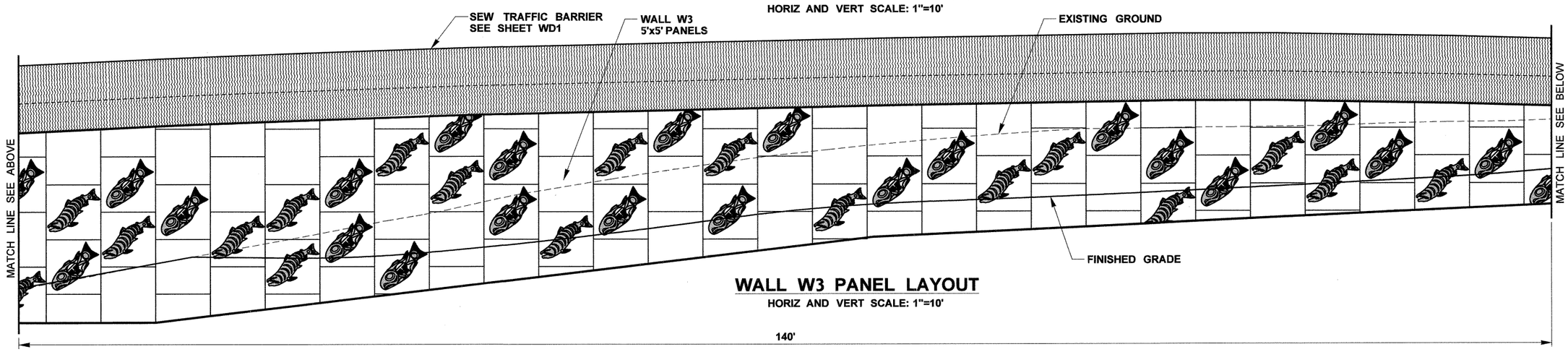

WALL W3 PANEL LAYOUT

HORIZ AND VERT SCALE: 1"=10'

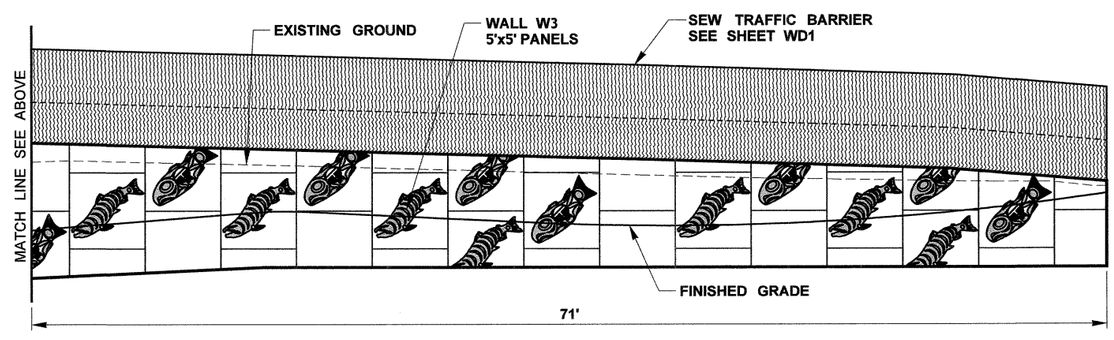

WALL W3 PANEL LAYOUT

HORIZ AND VERT SCALE: 1"=10'

FILE NAME	U:\PSO\Projects\Clients\1598-TulalipTribes\554-1598-095 116th-Ph4-PSE\99Svcs\CADD\DGN\PS&ESheets\BL1598033_DE_WD10.dgn
TIME	10:08:27 AM
DATE	8/30/2017
PLOTTED BY	purgabut
DESIGNED BY	M. TSUN
ENTERED BY	B. PURGANAN
CHECKED BY	J. MERTH
APPROVED BY	H. LONGFELLOW

REVISION	DATE	BY

REGION NO.	STATE	FED.AID PROJ.NO.
10	WASH	
JOB NUMBER		
CONTRACT NO.		LOCATION NO.

DATE
P.E. STAMP BOX

JOSEPH R. MERTH
STATE OF WASHINGTON
33224
REGISTERED PROFESSIONAL ENGINEER
8/30/17
DATE
P.E. STAMP BOX

TULALIP TRIBES
Parametrix

I-5 / 116TH STREET NE
INTERCHANGE IMPROVEMENTS
PHASE 4 RAMPS

WALL DETAILS

Plot 10
PLAN REF NO
WD10
SHEET 162 OF 238 SHEETS

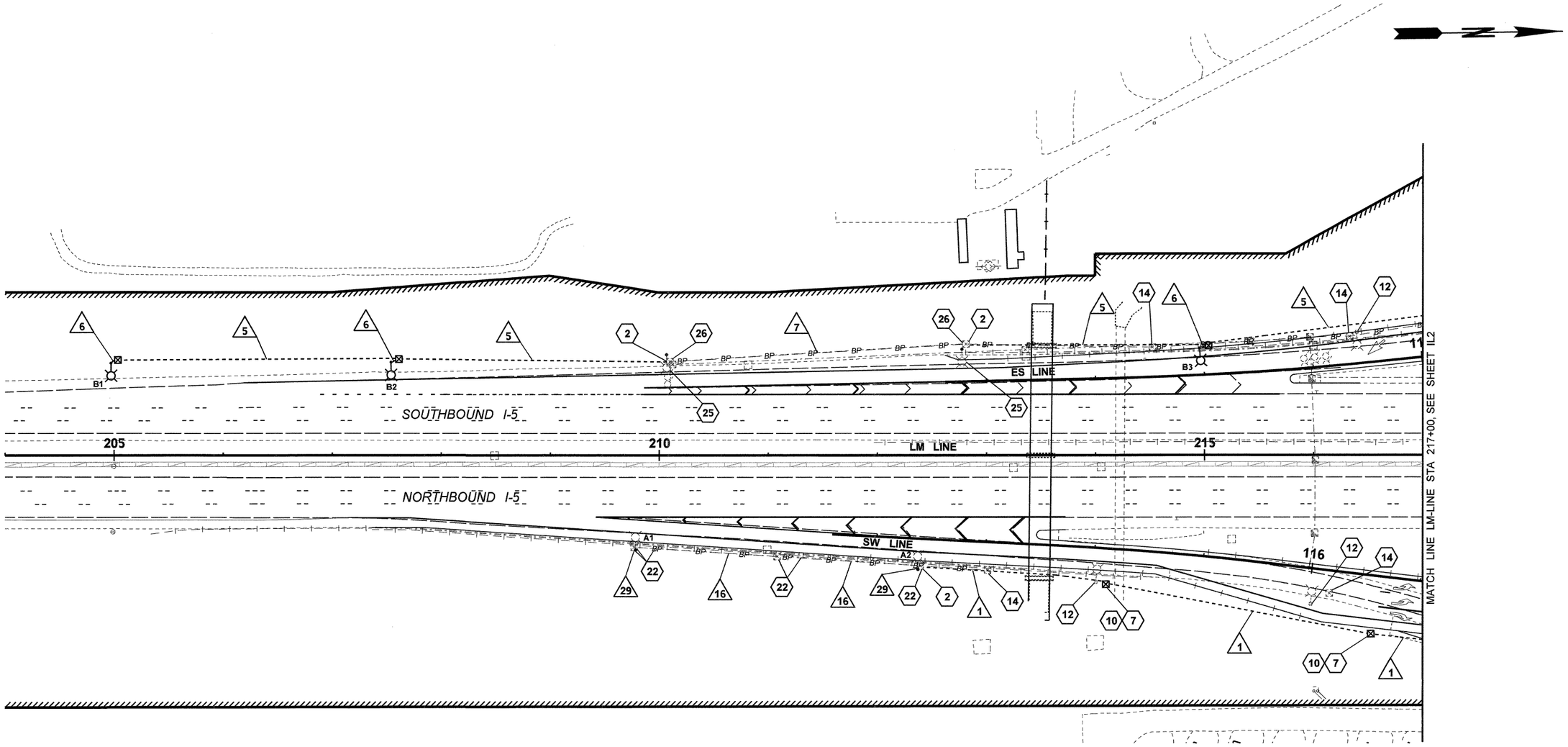

ILLUMINATION LEGEND

STREET LIGHT	TYPE 1 JUNCTION BOX
EXISTING STREET LIGHT	EXISTING TYPE 1 OR TYPE 4 JUNCTION BOX
EXISTING TIMBER STREET LIGHT	TYPE 2 JUNCTION BOX
CONDUIT	EXISTING TYPE 2 JUNCTION BOX
EXISTING CONDUIT	EXISTING TYPE 8 JUNCTION BOX
CONDUIT/WIRE NOTE	NEMA S.S. JUNCTION BOX (IN SEW TRAFFIC BARRIER)
CONSTRUCTION NOTE	EXISTING SERVICE CABINET

0 50 100
SCALE IN FEET

GENERAL NOTES:

1. FOR CONSTRUCTION NOTES, AND SCHEDULES, SEE SHEETS IL4 AND IL5.
2. FOR ILLUMINATION SCHEMATIC, SEE SHEET IL4.
3. EXCEPT AS SPECIFICALLY NOTED OTHERWISE, THE CONDUIT AND JUNCTION BOX LOCATIONS SHOWN ON THIS PLAN ARE SCHEMATIC AND SHALL BE ADJUSTED, WITH THE ENGINEER'S APPROVAL, AS REQUIRED TO ACCOMODATE EXISTING CONDITIONS AND OTHER NEW ELEMENTS OF THE PROJECT.

FILE NAME	U:\PSO\Projects\Clients\1598-TulalipTribes\554-1598-095 116th-Ph4-PSE\99Svcs\CADD\DGN\PS&ESheets\BL1598033_PS_IL.dgn
TIME	2:57:54 PM
DATE	8/13/2017
PLOTTED BY	purgabut
DESIGNED BY	M. KENDALL
ENTERED BY	M. KENDALL
CHECKED BY	E. SCHOTT
APPROVED BY	H. LONGFELLOW

REVISION	DATE	BY

REGION NO.	STATE	FED.AID PROJ.NO.
10	WASH	
JOB NUMBER		
CONTRACT NO.		LOCATION NO.

P.E. STAMP BOX — DATE

MARC EDWIN KENDALL, STATE OF WASHINGTON, 52658, REGISTERED PROFESSIONAL ENGINEER — 8-25-17 — DATE — P.E. STAMP BOX

TULALIP TRIBES — Parametrix

I-5 / 116TH STREET NE INTERCHANGE IMPROVEMENTS PHASE 4 RAMPS

ILLUMINATION PLAN

Plot 1

PLAN REF NO IL1

SHEET 163 OF 238 SHEETS

GENERAL NOTES:

1. FOR CONSTRUCTION NOTES, AND SCHEDULES, SEE SHEETS IL4 AND IL5.
2. FOR ILLUMINATION SCHEMATIC, SEE SHEET IL4.
3. EXCEPT AS SPECIFICALLY NOTED OTHERWISE, THE CONDUIT AND JUNCTION BOX LOCATIONS SHOWN ON THIS PLAN ARE SCHEMATIC AND SHALL BE ADJUSTED, WITH THE ENGINEER'S APPROVAL, AS REQUIRED TO ACCOMODATE EXISTING CONDITIONS AND OTHER NEW ELEMENTS OF THE PROJECT.

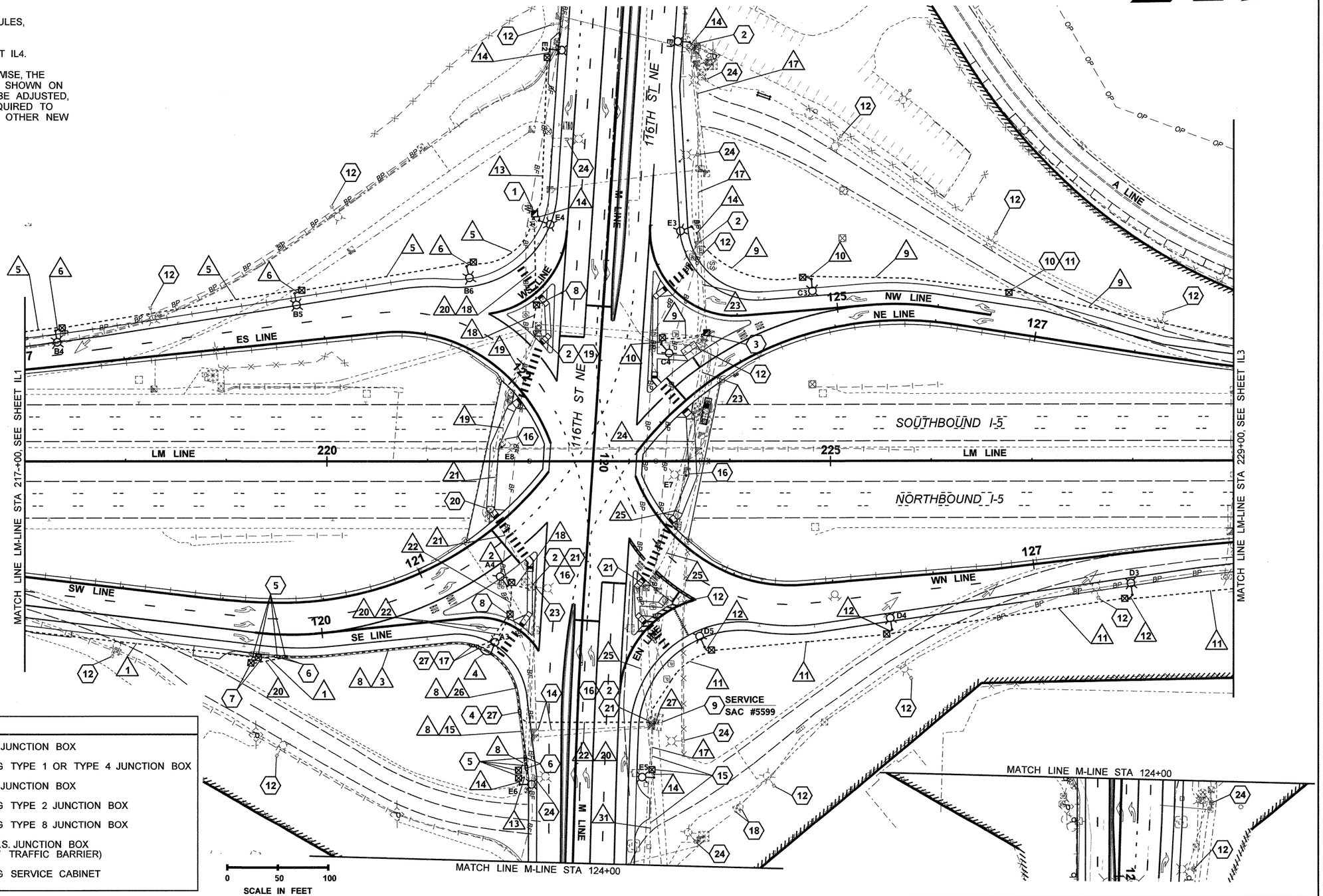

ILLUMINATION LEGEND

STREET LIGHT	TYPE 1 JUNCTION BOX
EXISTING STREET LIGHT	EXISTING TYPE 1 OR TYPE 4 JUNCTION BOX
EXISTING TIMBER STREET LIGHT	TYPE 2 JUNCTION BOX
CONDUIT	EXISTING TYPE 2 JUNCTION BOX
EXISTING CONDUIT	EXISTING TYPE 8 JUNCTION BOX
CONDUIT/WIRE NOTE	NEMA S.S. JUNCTION BOX (IN SEW TRAFFIC BARRIER)
CONSTRUCTION NOTE	EXISTING SERVICE CABINET

FILE NAME	U:\PSO\Projects\Clients\1598-TulalipTribes\554-1598-095 116th-Ph4-PSE\99Svcs\CADD\DGN\PS&ESheets\BL1598033_PS_IL.dgn
TIME	2:58:07 PM
DATE	8/13/2017
PLOTTED BY	purgabut
DESIGNED BY	M. KENDALL
ENTERED BY	M. KENDALL
CHECKED BY	E. SCHOTT
APPROVED BY	H. LONGFELLOW

REVISION	DATE	BY

REGION NO.	STATE	FED.AID PROJ.NO.
10	WASH	
JOB NUMBER		
CONTRACT NO.		LOCATION NO.

P.E. STAMP BOX — DATE

MARC EDWIN KENDALL, STATE OF WASHINGTON, 52668, REGISTERED PROFESSIONAL ENGINEER — 8-25-17 — DATE — P.E. STAMP BOX

TULALIP TRIBES — Parametrix

I-5 / 116TH STREET NE INTERCHANGE IMPROVEMENTS PHASE 4 RAMPS

ILLUMINATION PLAN

Plot 2

PLAN REF NO IL2

SHEET 164 OF 238 SHEETS

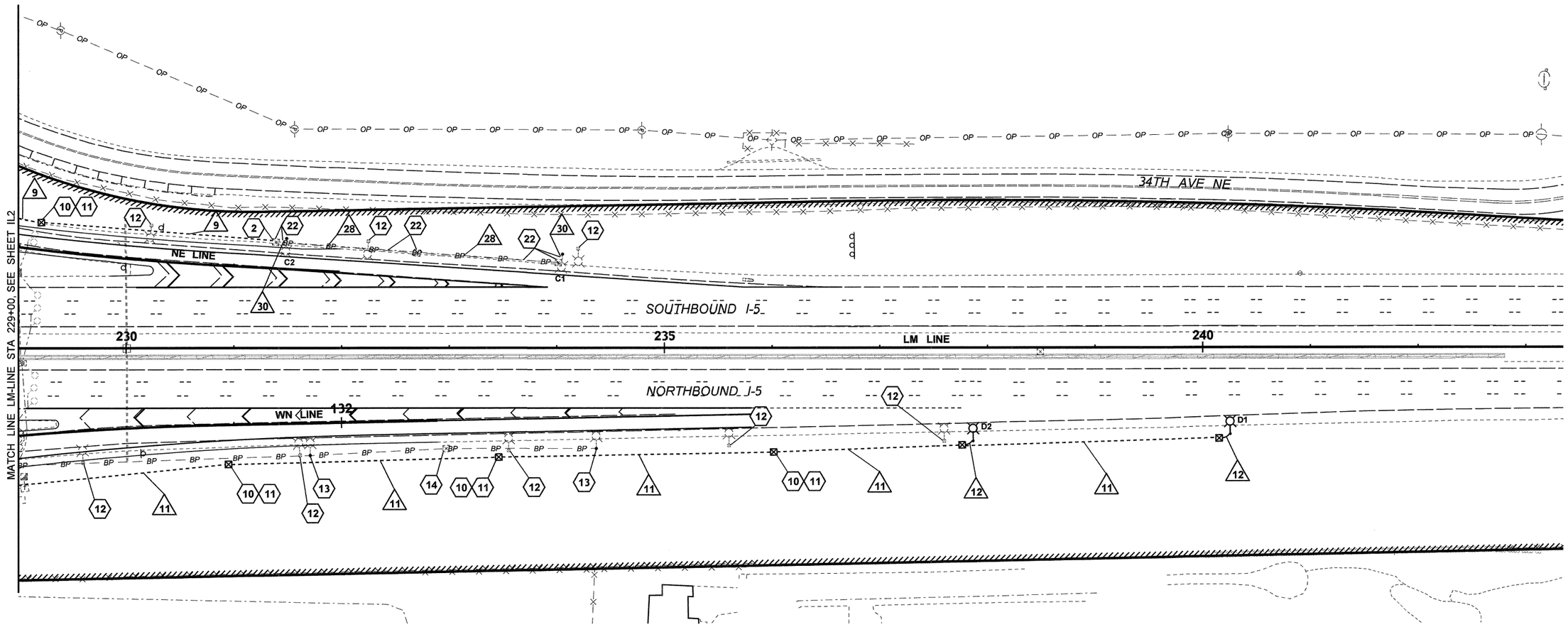

ILLUMINATION LEGEND

STREET LIGHT	TYPE 1 JUNCTION BOX
EXISTING STREET LIGHT	EXISTING TYPE 1 OR TYPE 4 JUNCTION BOX
EXISTING TIMBER STREET LIGHT	TYPE 2 JUNCTION BOX
CONDUIT	EXISTING TYPE 2 JUNCTION BOX
EXISTING CONDUIT	EXISTING TYPE 8 JUNCTION BOX
CONDUIT/WIRE NOTE	NEMA S.S. JUNCTION BOX (IN SEW TRAFFIC BARRIER)
CONSTRUCTION NOTE	EXISTING SERVICE CABINET

0 50 100
SCALE IN FEET

GENERAL NOTES:

1. FOR CONSTRUCTION NOTES, AND SCHEDULES, SEE SHEETS IL4 AND IL5.
2. FOR ILLUMINATION SCHEMATIC, SEE SHEET IL4.
3. EXCEPT AS SPECIFICALLY NOTED OTHERWISE, THE CONDUIT AND JUNCTION BOX LOCATIONS SHOWN ON THIS PLAN ARE SCHEMATIC AND SHALL BE ADJUSTED, WITH THE ENGINEER'S APPROVAL, AS REQUIRED TO ACCOMODATE EXISTING CONDITIONS AND OTHER NEW ELEMENTS OF THE PROJECT.

FILE NAME	U:\PSO\Projects\Clients\1598-TulalipTribes\554-1598-095 116th-Ph4-PSE\99Svcs\CADD\DGN\PS&ESheets\BL1598033_PS_IL.dgn
TIME	2:58:19 PM
DATE	8/13/2017
PLOTTED BY	purgabut
DESIGNED BY	M. KENDALL
ENTERED BY	M. KENDALL
CHECKED BY	E. SCHOTT
APPROVED BY	H. LONGFELLOW

REVISION | DATE | BY

REGION NO. 10 | STATE WASH | FED.AID PROJ.NO.

JOB NUMBER

CONTRACT NO. | LOCATION NO.

P.E. STAMP BOX — DATE

MARC EDWIN KENDALL, STATE OF WASHINGTON, 52488, REGISTERED PROFESSIONAL ENGINEER — 8-25-17 DATE

TULALIP TRIBES — Parametrix

I-5 / 116TH STREET NE INTERCHANGE IMPROVEMENTS PHASE 4 RAMPS

ILLUMINATION PLAN

Plot 3

PLAN REF NO IL3

SHEET 165 OF 238 SHEETS

ILLUMINATION CONSTRUCTION NOTES:

1. INSTALL WSDOT TYPE 2 JUNCTION BOX ADJACENT TO LIGHT POLE IN PLACE OF TYPE 1 UNIT.
2. ROUTE NEW CONDUIT INTO EXSITING JUNCTION BOX.
3. REMOVE EXISTING TYPE 1 JUNCTION BOX AND REPLACE WITH TYPE 2 JUNCTION BOX AT FINISHED GRADE. ROUTE NEW AND EXISTING CONDUIT INTO NEW TYPE 2 JUNCTION BOX.
4. INSTALL NEMA 4X NON-ADJUSTABLE S.S. JUNCTION BOX IN SEW TRAFFIC BARRIER AT LOCATION SHOWN.
5. ROUTE CONDUITS FROM GROUND INTO JUNCTION BOXES IN SEW TRAFFIC BARRIER. SEE DETAIL ON WSDOT STANDARD PLAN J-60.11-00 FOR CONDUIT TRANSITIONS AND DEFLECTION FITTINGS.
6. INSTALL TWO NEMA 4X NON-ADJUSTABLE S.S. JUNCTION BOXES IN SEW TRAFFIC BARRIER AT END OF BARRIER WALL PER WSDOT STANDARD PLAN J-60.11-00.
7. INSTALL TYPE 1 JUNCTION BOX AT BACK OF SHOULDER PER STD. PLAN J-10. COORDIANTE LOCATION WITH GUARDRAIL POST PLACEMENT (WHERE APPLICABLE).
8. INSTALL JUNCTION BOX WITHIN 10 FT OF EDGE OF ROADWAY.
9. TERMINATE NEW ILLUMINATION CIRCUITS IN EXISTING WSDOT SERVICE CABINET.
10. INSTALL TYPE 1 JUNCTION BOX AT 300' MAXIMUM SPACING.
11. INSTALL JUNCTION BOX AT TOP OF SLOPE, NOT STEEPER THAN 3:1.
12. REMOVE AND SALVAGE EXISTING LUMINAIRE ARM AND LUMINAIRE. REMOVE WIRE AND WOOD POLE. BACKFILL THE VOID.
13. REMOVE AND SALVAGE EXISTING LIGHT STANDARD AND LUMINAIRE. COMPLETELY REMOVE EXISTING LIGHT STANDARD FOUNDATION, WIRE FROM ABANDONED CONDUIT AND ADJACENT JUNCTION BOX. BACKFILL THE VOIDS.
14. REMOVE EXISTING JUNCTION BOX AND EXISTING ILLUMINATION CIRCUIT WIRE (IF PRESENT) AND ABANDON CONDUIT.
15. INTERCEPT EXISTING CONDUIT AND EXTEND INTO NEW JUNCTION BOX.
16. SPLICE NEW CIRCUIT E WIRES TO EXISTING CIRCUIT E WIRES IN EXISTING JUNCTION BOX.
17. INSTALL TWO PIGGY-BACKED NEMA 4X NON-ADJUSTABLE S.S. JUNCTION BOXES IN SEW TRAFFIC BARRIER AT THE LOCATION SHOWN IN THE PLANS. ROUTE ONE (1) 2" CONDUIT TO GROUND FROM EACH BOX AND ONE (1) 2" CONDUIT FROM EACH END OF THE PAIR OF PIGGY-BACKED JUNCTION BOXES INTO THE SEW BARRIER. FIELD ADJUST LOCATIONS TO PREVENT INSTALLATION AT JOINTS.
18. COMPLETELY REMOVE EXISTING LIGHT STANDARD FOUNDATION, ADJACENT JUNCTION BOX AND ASSOCIATED CONDUIT.
19. RELOCATE EXISTING JUNCTION BOX BEHIND BACK OF CURB, OUTSIDE OF SIDEWALK. REINSTALL AT FINISHED GRADE. REROUTE EXISTING CONDUIT TO NEW JUNCTION BOX LOCATION.
20. REMOVE EXISTING JUNCTION BOX. RECONNECT EX CONDUIT UNDER BRIDGE DECK AND RESTORE WIRING. FILL AND SEAL VOIDS CREATED IN BRIDGE DECK BY REMOVAL OF CONDUIT AND JUNCTION BOX. FILL VOIDS WITH GROUT.
21. ADJUST EXISTING JUNCTION BOX TO FINISHED GRADE.
22. REMOVE EXISTING ILLUMINATION CIRCUIT WIRE. UTILIZE EXISTING CONDUIT AND JUNCTION BOX FOR NEW ILLUMINATION CIRCUIT WIRE AND CONNECTION OF EXISTING LIGHT STANDARDS TO NEW CIRCUIT. SPLICE NEW CIRCUIT WIRES TO EXISTING IN HANDHOLE OF EX. LIGHT STANDARD.
23. REMOVE AND SALVAGE EXISTING LIGHT STANDARD AND LUMINAIRE FOR REUSE ON THIS PROJECT. COMPLETELY REMOVE EXISTING LIGHT STANDARD FOUNDATION, WIRE FROM ABANDONED CONDUIT AND ADJACENT JUNCTION BOX. BACKFILL THE VOIDS.
24. REMOVE AND SALVAGE EXISTING LUMINAIRE AND ARM.
25. REMOVE AND SALVAGE EXISTING LIGHT STANDARD AND LUMINAIRE. COMPLETELY REMOVE EXISTING LIGHT STANDARD FOUNDATION AND WIRE FROM ABANDONED CONDUIT. PRESERVE ADJACENT JUNCTION BOX FOR USE ON THIS PROJECT. BACKFILL THE VOIDS.
26. REMOVE EXISTING ILLUMINATION CIRCUIT WIRE. UTILIZE EXISTING CONDUIT AND JUNCTION BOX FOR NEW ILLUMINATION CIRCUIT WIRE. REMOVE CONDUIT AND WIRING TO EXISTING LIGHT STANDARD TO BE REMOVED.
27. ROUTE CONDUITS FROM GROUND INTO ENDS OF NEMA JUNCTION BOXES IN SEW TRAFFIC BARRIER. SEE DETAIL 1, SHEET IL5 AND WSDOT STANDARD PLAN J-60.11-00 FOR CONDUIT TRANSITIONS AND DEFLECTION FITTINGS.

ILLUMINATION GENERAL NOTES:

1. INSTALL A BONDING CABLE IN ALL EXISTING CONDUITS TO REMAIN THAT ARE PART OF THE ELECTRICAL SYSTEM MODIFIED OR ALTERED BY THIS CONTRACT. THE BONDING CABLE SHALL BE INSTALLED PER NEC REQUIREMENTS AND WSDOT SPECIAL PROVISIONS.
2. ALL EXISTING JUNCTION BOXES TO REMAIN THAT ARE A PART OF THE ELECTRICAL SYSTEM MODIFIED OR ALTERED BY THIS CONTRACT SHALL BE UPDATED TO CURRENT BONDING AND GROUNDING REQUIREMENTS OF THE NEC AND WSDOT SPECIAL PROVISIONS AND SHALL BE ADJUSTED TO NEW FINISHED GRADE.

ILLUMINATION CONDUIT / WIRE SCHEDULE

RUN NO. △	CONDUIT SIZE	ILLUMINATION CIRCUITS						NOTES
		A	B	C	D	E	F(3)	
1	2"	2-#8						
2	1"	2-#8						
3	2"	2-#8						(1)
4	1"	2-#8						(1)
5	2"		2-#8					
6	1"		2-#8					
7	EX 2"		2-#8					
8	2"							SPARE (1)
9	2"			2-#8				
10	1"			2-#8				
11	2"				2-#8			
12	1"				2-#8			
13	2"					2-#8		
14	1"					2-#8		
15	2"					2-#8		(1)
16	EX 2"	2-#8						
17	EX 2"					2-#8		
18	2"		2-#8			2-#8		
19	EX 2"		2-#8			2-#8		
20	2"							SPARE
21	EX 2"		2-#8			EX 2-#8		(2)
22	2"	2-#8	2-#8			2-#8		
23	EX 2"			2-#8		2-#8		
24	EX 2"			2-#8		2-#8	EX 2-#6	
25	EX 2"			2-#8		EX 2-#8	EX 2-#6	
26	2"	2-#8	2-#8			2-#8		(1)
27	EX 2-2"	2-#8	2-#8	2-#8	2-#8	EX 2-#8	EX 2-#6	
28	EX 2"			2-#8				
29	EX 1"	2-#8						
30	EX 1"			2-#8				
31	EX 2"							SPARE

ILLUMINATION CONDUIT/WIRE SCHEDULE NOTES:

(1) CONDUIT IN SEW TRAFFIC BARRIER. SEE WSDOT STANDARD PLAN J-60.11-00.

(2) REMOVE AND REPLACE EX. CIRCUIT E WIRING AFTER REMOVAL OF JUNCTION BOX AND RESTORATION OF EX. CONDUIT UNDER BRIDGE DECK PER CONSTRUCTION NOTE 20.

(3) EXISTING UNDERDECK FIXTURES, NOT SHOWN ON PLANS.

ILLUMINATION CONDUIT/WIRE SCHEDULE GENERAL NOTES:

1. ALL CONDUITS INSTALLED ABOVE GROUND SHALL BE RGS.
2. ALL CONDUITS INSTALLED IN FORMED CONCRETE AND IN TRENCH SHALL BE PVC.
3. ALL PVC CONDUIT SHALL BE SCHEDULE 80.
4. GROUND WIRES FOR ILLUMINATION CIRCUITS NOT SHOWN. INSTALL PER STANDARD SPECIFICATIONS.

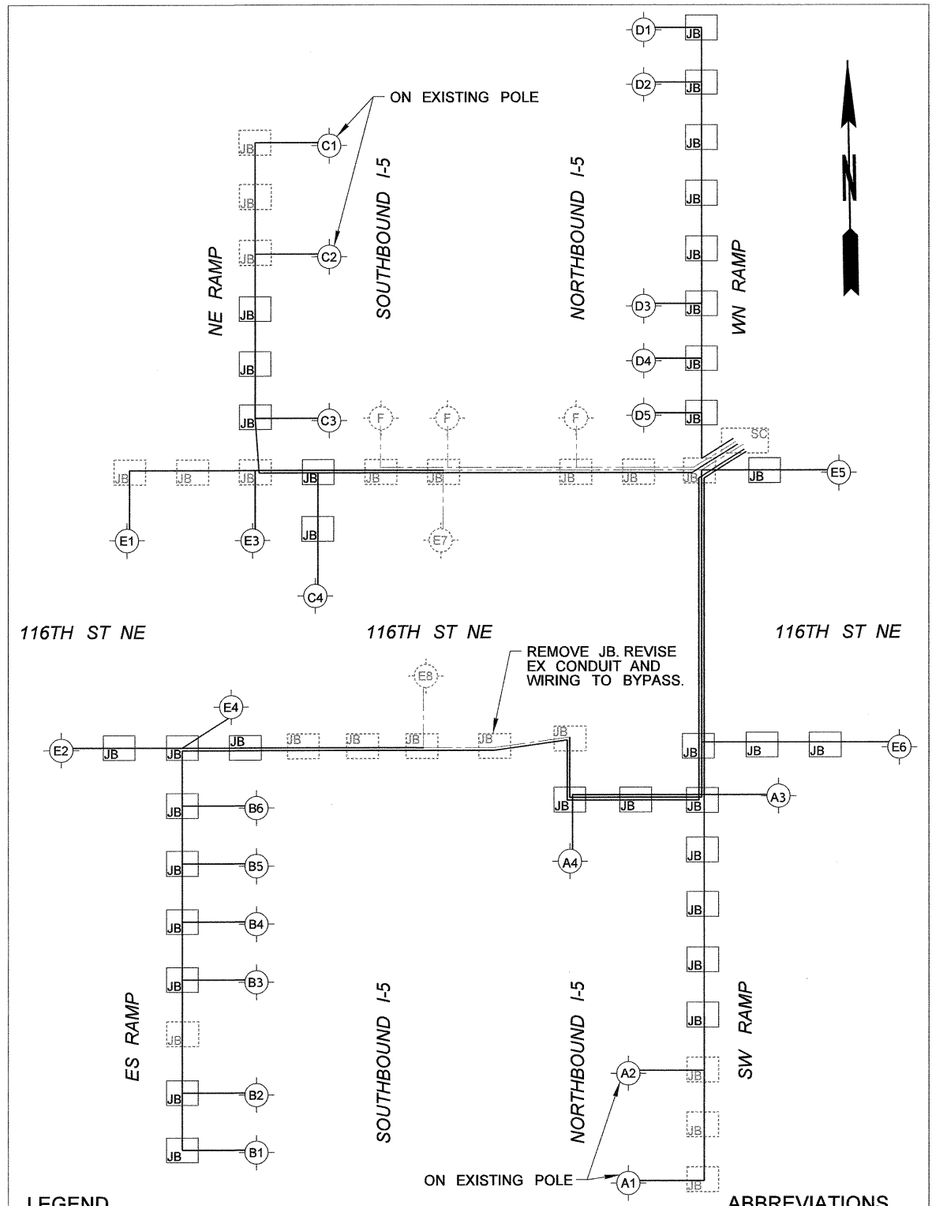

LEGEND

EXISTING — PROPOSED

ILLUMINATION WIRE, 2-#8 TYP SEE CONDUIT / WIRE SCHEDULE.

EQUIPMENT

ABBREVIATIONS

JB JUNCTION BOX
SC SERVCE CABINET

ILLUMINATION SCHEMATIC DIAGRAM

FILE NAME	U:\PSO\Projects\Clients\1598-TulalipTribes\554-1598-095 116th-Ph4-PSE\99Svcs\CADD\DGN\PS&ESheets\BL1598033_PS_IL.dgn
TIME	2:58:32 PM
DATE	8/13/2017
PLOTTED BY	purgabut
DESIGNED BY	M. KENDALL
ENTERED BY	M. KENDALL
CHECKED BY	E. SCHOTT
APPROVED BY	H. LONGFELLOW

REVISION | DATE | BY

REGION NO. 10 | STATE WASH | FED.AID PROJ.NO.

JOB NUMBER

CONTRACT NO. | LOCATION NO.

P.E. STAMP BOX — DATE

MARC EDWIN KENDALL, STATE OF WASHINGTON, 52658, REGISTERED PROFESSIONAL ENGINEER — 8-25-17 DATE

P.E. STAMP BOX

TULALIP TRIBES — Parametrix

I-5 / 116TH STREET NE INTERCHANGE IMPROVEMENTS PHASE 4 RAMPS

ILLUMINATION SCHEDULES, NOTES AND DETAILS

Plot 4

PLAN REF NO IL4

SHEET 166 OF 238 SHEETS

LUMINAIRE SCHEDULE — SERVICE NO. SAC 5599

POLE NO.	CIRCUIT	LOCATION STATION	LOCATION OFFSET	TYPE-DISTRIBUTION-WATTAGE(3)	MAST ARM LENGTH	ORIENTATION ANGLE	H1 HEIGHT	BASE TYPE	FOUNDATION STD PLAN AND CASE	FOUNDATION TYPE (J-28.30-03)	COMMENTS
A1	A	LM 209+78	86.0 RT	TYPE 3-MEDIUM-310 LED	EXIST	EXIST	EXIST	EXIST	EXIST	EXIST	(5)
A2	A	SW 112+39	28.0 RT	TYPE 3-MEDIUM-310 LED	EXIST	EXIST	EXIST	EXIST	EXIST	EXIST	(5)
A3	A	SE 121+80	RT (1)	TYPE 3-MEDIUM-250 LED	8'	0°	48'	(1)	(1)	(1)	
A4	A	SW 121+64	54.5 RT	TYPE 3-MEDIUM-250 LED	8'	0°	50'	SLIP	(4)	A	
B1	B	LM 204+97	85.0 LT	TYPE 3-MEDIUM-310 LED	12'	0°	50'	SLIP	J-28.22-00 CASE B	A	
B2	B	LM 207+54	86.0 LT	TYPE 3-MEDIUM-310 LED	12'	0°	50'	SLIP	J-28.22-00 CASE C	A	
B3	B	ES 114+97	25.0 LT (2)	TYPE 3-MEDIUM-310 LED	8'	0°	50'	FIXED	J-28.24-01 CASE E	A	
B4	B	ES 117+35	35.5 LT (2)	TYPE 3-MEDIUM-310 LED	8'	0°	50'	FIXED	J-28.24-01 CASE E	A	
B5	B	ES 119+75	48.0 LT (2)	TYPE 3-MEDIUM-250 LED	8'	0°	50'	FIXED	J-28.24-01 CASE E	A	
B6	B	ES 121+20	76.0 LT	TYPE 3-MEDIUM-250 LED	8'	330°	50'	SLIP	J-28.22-00 CASE B	A	
C1	C	M 234+05	86.0 LT	TYPE 3-MEDIUM-310 LED	EXIST	EXIST	EXIST	EXIST	EXIST	EXIST	(5)
C2	C	NE 131+48	28.0 LT	TYPE 3-MEDIUM-310 LED	EXIST	EXIST	EXIST	EXIST	EXIST	EXIST	(5)
C3	C	NW 124+77	30.5 LT	TYPE 3-MEDIUM-250 LED	16'	0°	50'	SLIP	J-28.22-00 CASE B	A	
C4	C	NE 123+48	58.5 LT	TYPE 3-MEDIUM-250 LED	8'	355°	50'	SLIP	(4)	A	
D1	D	LM 240+26	86.0 RT	TYPE 3-MEDIUM-310 LED	16'	0°	50'	SLIP	J-28.22-00 CASE B	A	
D2	D	LM 237+87	87.0 RT	TYPE 3-MEDIUM-310 LED	16'	0°	50'	SLIP	J-28.22-00 CASE B	A	
D3	D	WN 127+94	42.0 RT	TYPE 3-MEDIUM-310 LED	16'	0°	50'	SLIP	J-28.22-00 CASE B	A	
D4	D	WN 125+55	52.0 RT	TYPE 3-MEDIUM-250 LED	16'	0°	50'	SLIP	J-28.22-00 CASE B	A	
D5	D	EN 123+75	47.0 RT	TYPE 3-MEDIUM-250 LED	16'	0°	50'	SLIP	J-28.22-00 CASE B	A	
E1	E	M 115+79	LT (2)	TYPE 3-MEDIUM-250 LED	12'	0°	50'	FIXED	J-28.24-01 CASE E	A	
E2	E	M 115+96	70.0 RT	TYPE 3-MEDIUM-250 LED	12'	0°	50'	SLIP	J-28.22-00 CASE B	A	
E3	E	M 117+61	82.5 LT	TYPE 3-MEDIUM-250 LED	8'	323°	50'	SLIP	J-28.22-00 CASE B	A	
E4	E	M 117+65	69.5 RT	TYPE 3-MEDIUM-250 LED	8'	2°	50'	SLIP	J-28.22-00 CASE B	A	
E5	E	M 123+12	78.0 LT	TYPE 3-MEDIUM-250 LED	16'	0°	50'	SLIP	J-28.22-00 CASE B	A	
E6	E	M 123+22	55.0 RT	TYPE 3-MEDIUM-250 LED	16'	0°	50'	FIXED	J-28.24-01 CASE E	A	
E7	E	M 120+08	93.5 LT	EXIST	EXIST	EXIST	EXIST	EXIST	EXIST	EXIST	
E8	E	M 119+92	91.5 RT	EXIST	EXIST	EXIST	EXIST	EXIST	EXIST	EXIST	

LUMINAIRE SCHEDULE NOTES:

(1) INSTALL ON SEW TRAFFIC BARRIER PER WSDOT STANDARD PLAN J-28.45-03 AND DETAILS ON SHEET WD2.

(2) INSTALL STREET LIGHT STANDARD BEHIND TRAFFIC BARRIER PER WSDOT STD PLAN J-28.24-01, CASE E.

(3) DUE TO VARIATIONS IN LED OUTPUT, LED WATTAGE IS LISTED IN EQUIVALENT HPS WATTS.

(4) TOP OF FOUNDATION SHALL BE FLUSH WITH FINISHED GRADE OF RAISED TRAFFIC ISLAND.

(5) REPLACE EXISTING HPS COBRA HEAD LUMINARE WITH LED COBRA HEAD AS NOTED IN LUMINAIRE SCHEDULE.

GENERAL LUMINAIRE SCHEDULE NOTES:

1. CONSTRUCT FOUNDATION AT LOCATION NOTED ON LUMINAIRE SCHEDULE. FURNISH AND INSTALL POLE AND LUMINAIRE.
2. FURNISH AND INSTALL WSDOT TYPE 1 JUNCTION BOX WITH LOCKING LID WITHIN 5' OF LIGHT STANDARD UNLESS SPECIFIED OTHERWISE ON THE PLANS. INSTALL BOX OUT OF ROADWAY OR SHOULDER AREA UNLESS NOTED OTHERWISE ON THE PLANS. ALL JUNCTION BOXES SHALL BE INSTALLED ON SLOPES OF 3:1 OR LESS.
3. ALL POLES ARE STANDARD WSDOT GALVANIZED STEEL WITH TYPE 1 DAVIT ARM.
4. ORIENTATION ANGLE IS THE ROTATION OF THE LUMINAIRE ARM IN RELATION TO THE ALIGNMENT, MEASURED CLOCKWISE IN DEGREES. PERPENDICULAR TO THE ALIGNMENT IS 0 DEGREES.
5. AGENCY SUPPLIED ILLUMINATION EQUIPMENT IS AVAILABLE FOR USE ON THE PROJECT. SEE SPECIAL PROVISIONS FOR FULL LIST OF AVAILABLE EQUIPMENT.

SERVICE CABINET BREAKER SCHEDULE(1) — SAC 5599

TYPE E SERVICE 240V/480V

CIRCUIT	DESCRIPTION	BREAKER RATING	CONTACTOR RATING	VOLTAGE	LOAD (KVA)
----	MAIN	200 AMP	N/A	240/480	----
A	ILLUMINATION A	15 AMP	30 AMP	480	1.10
B	ILLUMINATION B	15 AMP	30 AMP	480	2.36
C	ILLUMINATION C	15 AMP	30 AMP	480	1.10
D	ILLUMINATION D	15 AMP	30 AMP	480	1.41
E	ILLUMINATION E	15 AMP	30 AMP	480	1.86
F	ILLUMINATION F	25 AMP	30 AMP	480	7.00
G	DATA STATION - 005es20234	20 AMP	N/A	480	7.50
H	CCTV CABINET - 005vc20249	20 AMP	N/A	480	7.50
I	NB DATA STATION (2)	20 AMP	N/A	480	7.50
J	SPARE	20 AMP	N/A	480	----
KK	INTERNAL TRANSFORMER	15 AMP	N/A	480	3.0
K-1	GFCI	15 AMP	N/A	120/240	1.80
K-2	HEAT STRIP	15 AMP	N/A	120/240	0.10
K-3	PHOTOCELL	15 AMP	N/A	120/240	0.001

NOTES:

(1) EXCEPT AS NOTED OTHERWISE, ALL EQUIPMENT SHOWN IS EXISTING PER RECORD DRAWINGS. CONTRACTOR SHALL VERIFY AND ADVISE THE ENGINEER IF ACTUAL EXISTING CONDITIONS DIFFER.

(2) NEW CIRCUIT FOR EX. DATA STATION TRANSFORMER. SEE ITS PLANS.

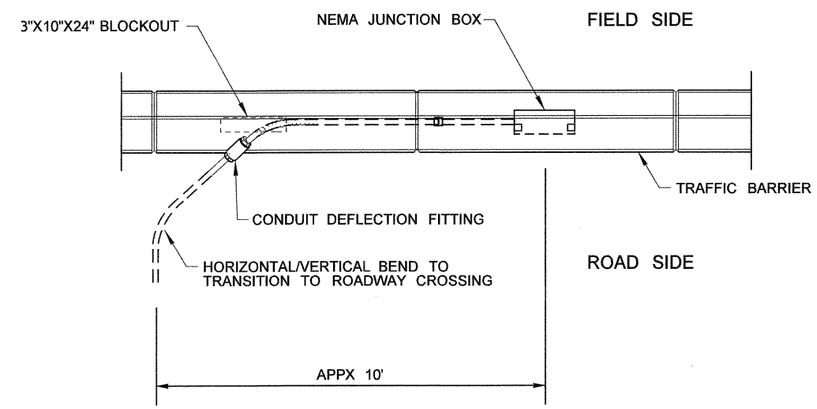

NOTES:

(1) NOT ALL DETAILS ARE SHOWN. SEE WSDOT STD PLAN J-60.11-00 FOR ADDITIONAL DETAILS.

TYPICAL PERPENDICULAR CONDUIT BARRIER ENTRY DETAIL 1 / -

FILE NAME	U:\PSO\Projects\Clients\1598-TulalipTribes\554-1598-095 116th-Ph4-PSE\99Svcs\CADD\DGN\PS&ESheets\BL1598033_PS_IL.dgn
TIME	2:58:45 PM
DATE	8/13/2017
PLOTTED BY	purgabut
DESIGNED BY	M. KENDALL
ENTERED BY	M. KENDALL
CHECKED BY	E. SCHOTT
APPROVED BY	H. LONGFELLOW

REVISION | DATE | BY

REGION NO. 10 | STATE WASH | FED.AID PROJ.NO.

JOB NUMBER

CONTRACT NO. | LOCATION NO.

P.E. STAMP BOX — DATE

MARC EDWIN KENDALL, STATE OF WASHINGTON, 52668, REGISTERED PROFESSIONAL ENGINEER — 8-25-17 DATE — P.E. STAMP BOX

TULALIP TRIBES — Parametrix

I-5 / 116TH STREET NE INTERCHANGE IMPROVEMENTS PHASE 4 RAMPS

ILLUMINATION SCHEDULES AND NOTES

Plot 5 | PLAN REF NO IL5 | SHEET 167 OF 238 SHEETS

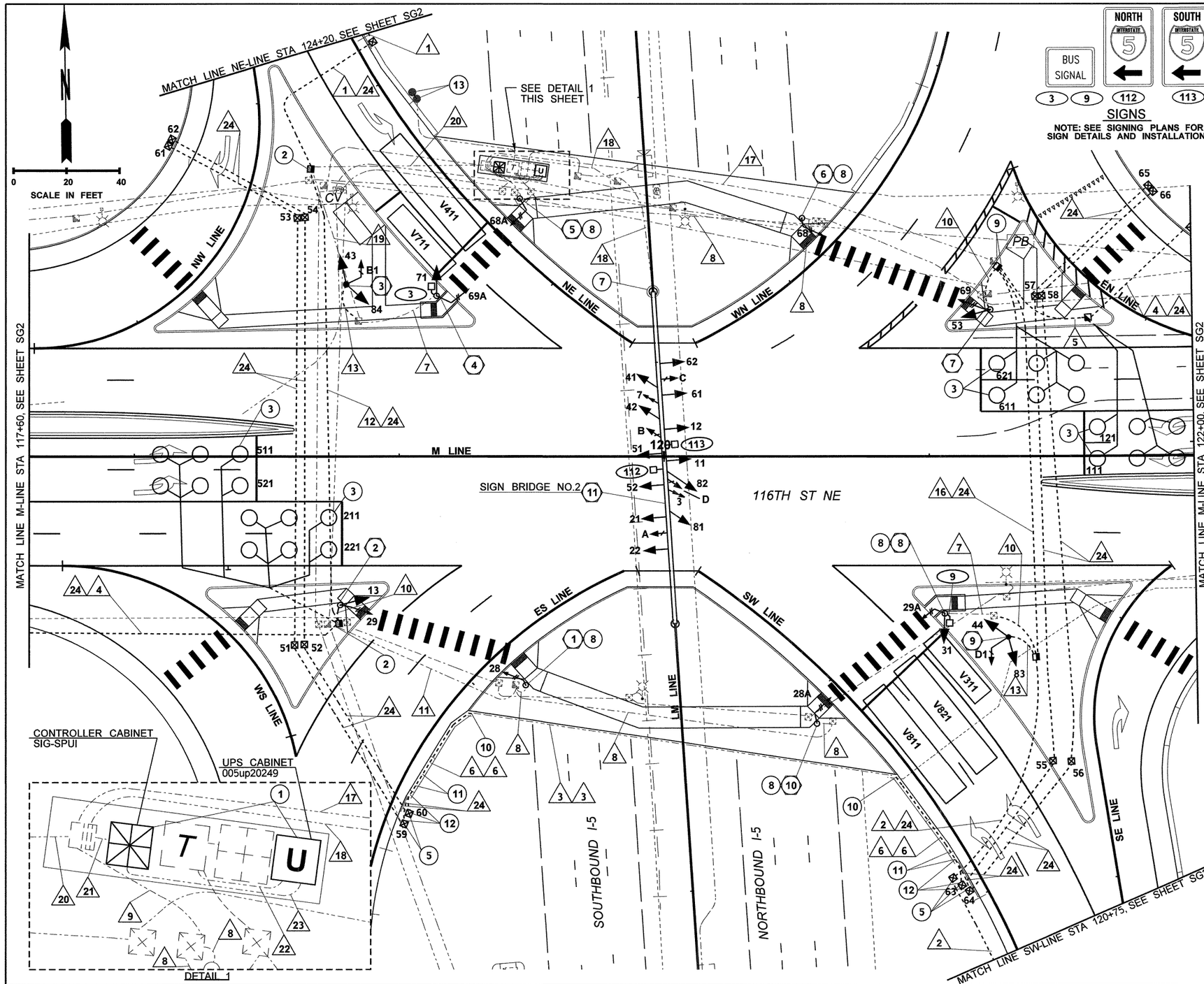

SIGNS

NOTE: SEE SIGNING PLANS FOR SIGN DETAILS AND INSTALLATIONS

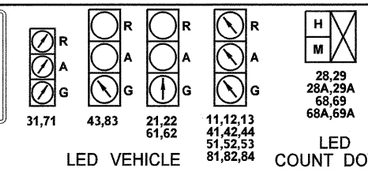

LED VEHICLE SIGNAL HEADS

LED COUNT DOWN PEDESTRIAN

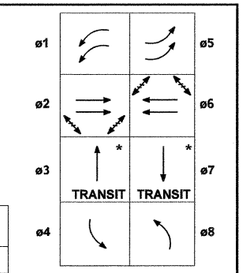

← VEHICLE MOVEMENT

←-→ PEDESTRIAN MOVEMENT

* CONDITIONALLY SERVICED TO LEAD AND/OR LAG OPPOSING LEFT TURNS

PHASE DIAGRAM

EMERGENCY VEHICLE PRE-EMPTION		
DETECTOR NUMBER	RIGHT OF WAY	
	PHASE	HEAD NO.
A	2,5	21,22,51,52,53
B,B1	4	41,42,43,44
C	1,6	11,12,13,61,62
D, D1	8	81,82,83,84

GENERAL NOTES:

1. FOR CONSTRUCTION NOTES, SIGNAL STANDARD NOTES, AND SCHEDULES, SEE SHEET SG3.
2. ALL APS PUSHBUTTONS SHALL BE MOUNTED 3'-6" ABOVE WALKWAY SURFACE.
3. EXCEPT AS SPECIFICALLY NOTED OTHERWISE, THE CONDUIT AND JUNCTION BOX LOCATIONS SHOWN ON THIS PLAN ARE SCHEMATIC AND SHALL BE ADJUSTED, WITH THE ENGINEER'S APPROVAL, AS REQUIRED TO ACCOMMODATE EXISTING CONDITIONS AND OTHER PROPOSED ELEMENTS OF THE PROJECT.

SIGNAL HEAD DISPLAY NOTES:

1. VEHICLE SIGNAL HEADS 31 AND 71 SHALL HAVE 8" LENSES. ALL OTHER VEHICLE SIGNAL HEADS SHALL HAVE 12" LENSES. ALL VEHICLE SIGNAL HEADS SHALL HAVE LED LIGHT SOURCES.
2. ALL SIGN BRIDGE MOUNTED VEHICLE SIGNAL HEADS SHALL HAVE TYPE "LE" MOUNTING HARDWARE, UNLESS SPECIFIED OTHERWISE.
3. VEHICLE SIGNAL HEADS 43 & 84 AND 44 & 83 SHALL HAVE TYPE "H" MOUNTING HARDWARE. HEADS 13 AND 53 SHALL HAVE TYPE "D".
4. VEHICLE SIGNAL HEADS 31 AND 71 AND PEDESTRIAN SIGNAL HEADS 29A AND 69A SHALL HAVE TYPE "C"/"F" HYBRID POST TOP MOUNTING HARDWARE WITH HEADS MOUNTED AT 8' ABOVE TOP OF SIDEWALK.
5. PEDESTRIAN SIGNAL HEADS 29 AND 69 SHALL HAVE TYPE "E" MOUNTING HARDWARE. HEADS 28, 28A, 68 AND 68A SHALL HAVE TYPE "D".
6. ALL VEHICLE SIGNAL HEADS SHALL HAVE 5" VANED BACKPLATES AND POLYCARBONATE TUNNEL VISORS. BACKPLATES AND VISORS SHALL BE PAINTED FLAT BLACK.
7. INSTALL DIRECTIONALLY LOUVERED VISORS ON VEHICLE SIGNAL HEADS 31, 43, 71 AND 83. OPTICALLY PROGRAMMED VEHICLE SIGNAL HEADS ARE NOT ALLOWED.
8. PEDESTRIAN SIGNAL HEADS SHALL BE COUNTDOWN TYPE WITH LED LIGHT SOURCES.
9. ALL VEHICLE SIGNALS MOUNTED ON THE BRIDGE STRUCTURE SHALL HAVE ADJUSTABLE LOUVERS.

SIGNAL LEGEND

◄	VEHICLE SIGNAL HEAD	PB	PULL BOX
	EMERGENCY VEH DETECTOR		TYPE 1 JUNCTION BOX
#-	PEDESTRIAN SIGNAL HEAD		TYPE 2 JUNCTION BOX
	VIDEO CAMERA		TYPE 8 JUNCTION BOX
	TRAFFIC SIGN	T	TRANSFORMER
	CONDUIT	U	UPS CABINET
	LOOP		SERVICE CABINET
	SIGN BRIDGE		CONTROLLER CABINET
	TYPE I OR PS POLE		TIMBER LIGHT STANDARD
	TYPE FB POLE	X	CONDUIT / WIRE NOTE
	TIMBER POLE	X	SIGNAL STANDARD NOTE
	TEMPORARY TIMBER PS POLE	X	CONSTRUCTION NOTE

FILE NAME	U:\PSO\Projects\Clients\1598-TulalipTribes\554-1598-095 116th-Ph4-PSE\99Svcs\CADD\DGN\PS&ESheets\BL1598033_PS_SG.dgn
TIME	3:35:17 PM
DATE	8/13/2017
PLOTTED BY	purgabut
DESIGNED BY	E. SCHOTT
ENTERED BY	M. KENDALL
CHECKED BY	C. CLARK
APPROVED BY	H. LONGFELLOW

REVISION	DATE	BY

REGION NO.	STATE	FED.AID PROJ.NO.
10	WASH	
JOB NUMBER		
CONTRACT NO.		LOCATION NO.

P.E. STAMP BOX — DATE

E. CHARLES SCHOTT, STATE OF WASHINGTON, 33242, REGISTERED PROFESSIONAL ENGINEER — 8-25-17 DATE — P.E. STAMP BOX

TULALIP TRIBES — Parametrix

I-5 / 116TH STREET NE INTERCHANGE IMPROVEMENTS PHASE 4 RAMPS

SIGNALIZATION PLAN

Plot 1

PLAN REF NO SG1

SHEET 168 OF 238 SHEETS

TEMPORARY SIGNAL SYSTEM REMOVAL NOTE:

1. TRAFFIC SIGNAL HEADS, SIGNS AND OTHER EQUIPMENT ON SPAN WIRE IS NOT SHOWN ON THE PLANS.

GENERAL NOTES:

1. FOR CONSTRUCTION NOTES, SIGNAL STANDARD NOTES, AND SCHEDULES, SEE SHEET SG3.
2. EXCEPT AS SPECIFICALLY NOTED OTHERWISE, THE CONDUIT AND JUNCTION BOX LOCATIONS SHOWN ON THIS PLAN ARE SCHEMATIC AND SHALL BE ADJUSTED, WITH THE ENGINEER'S APPROVAL, AS REQUIRED TO ACCOMMODATE EXISTING CONDITIONS AND OTHER PROPOSED ELEMENTS OF THE PROJECT.

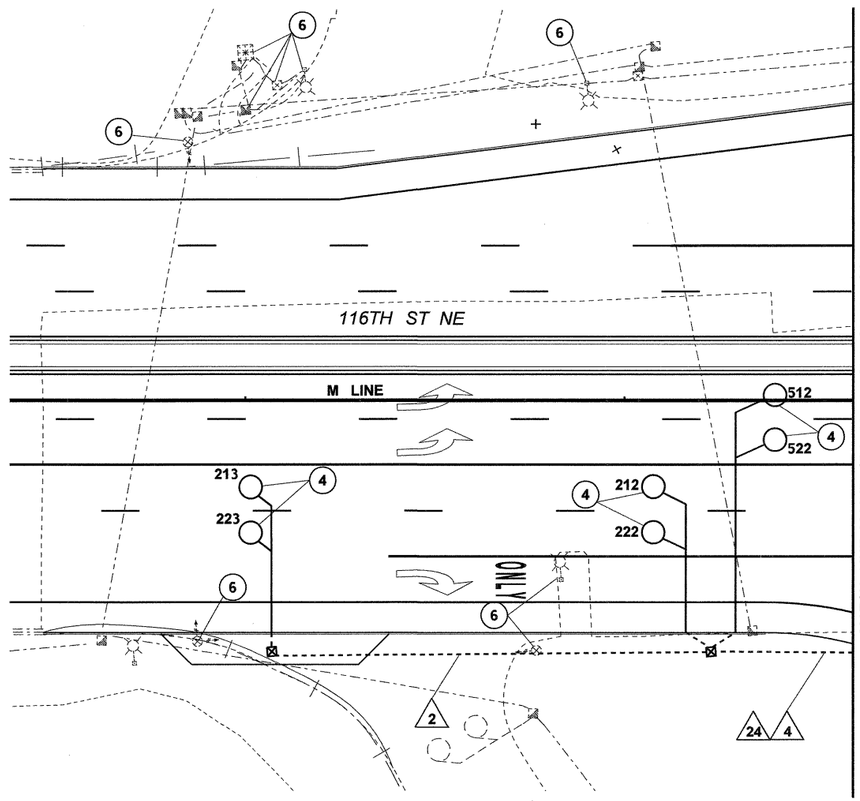

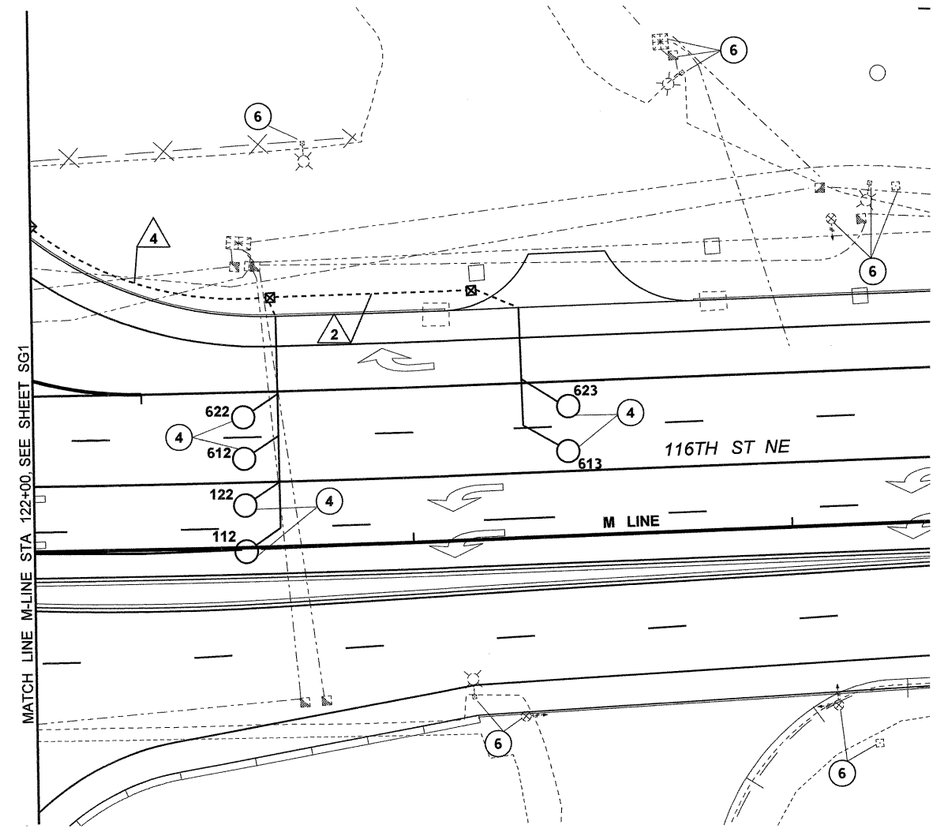

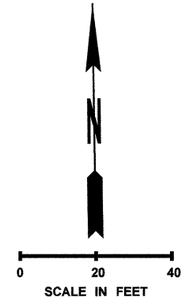

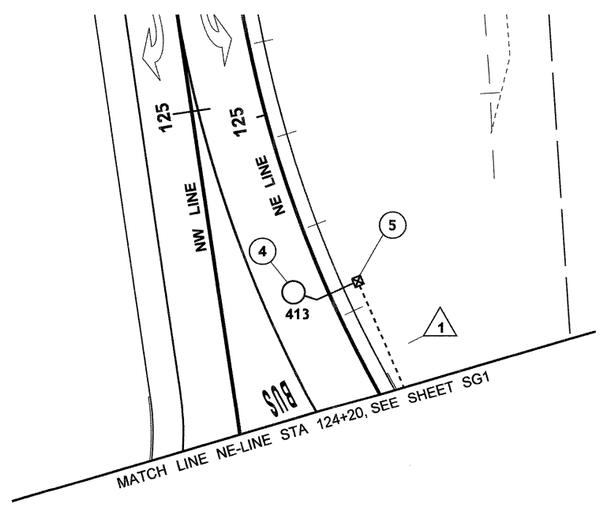

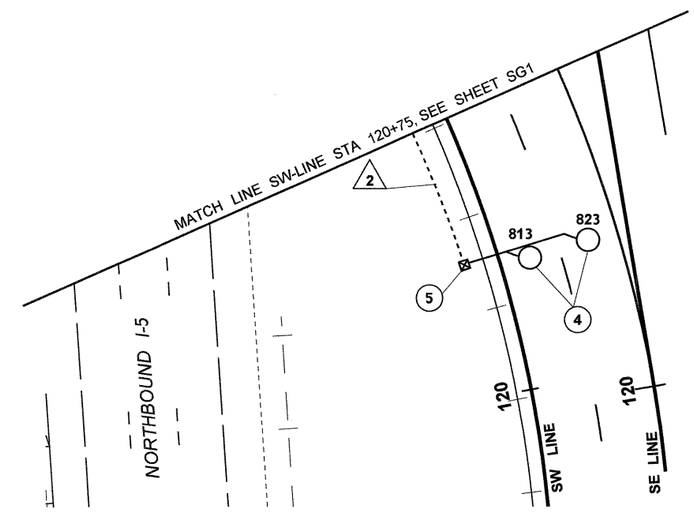

SIGNAL LEGEND

	VEHICLE SIGNAL HEAD	PB	PULL BOX
	EMERGENCY VEH DETECTOR		TYPE 1 JUNCTION BOX
	PEDESTRIAN SIGNAL HEAD		TYPE 2 JUNCTION BOX
	VIDEO CAMERA		TYPE 8 JUNCTION BOX
	TRAFFIC SIGN	T	TRANSFORMER
	CONDUIT	U	UPS CABINET
	LOOP		SERVICE CABINET
	SIGN BRIDGE		CONTROLLER CABINET
	TYPE I OR PS POLE		TIMBER LIGHT STANDARD
	TYPE FB POLE	X	CONDUIT / WIRE NOTE
	TIMBER POLE	X	SIGNAL STANDARD NOTE
	TEMPORARY TIMBER PS POLE	X	CONSTRUCTION NOTE

FILE NAME	U:\PSO\Projects\Clients\1598-TulalipTribes\554-1598-095 116th-Ph4-PSE\99Svcs\CADD\DGN\PS&ESheets\BL1598033_PS_SG.dgn					
TIME	3:35:29 PM				REGION NO. 10	STATE WASH	FED.AID PROJ.NO.
DATE	8/13/2017				JOB NUMBER		
PLOTTED BY	purgabut						
DESIGNED BY	E. SCHOTT				CONTRACT NO.	LOCATION NO.	
ENTERED BY	M. KENDALL						
CHECKED BY	C. CLARK						
APPROVED BY	H. LONGFELLOW						
REGIONAL ADM.		REVISION	DATE	BY			

P.E. STAMP BOX — DATE

E. CHARLES SCHOTT, STATE OF WASHINGTON, 33242, REGISTERED PROFESSIONAL ENGINEER — 8·25·17 DATE — P.E. STAMP BOX

TULALIP TRIBES — Parametrix

I-5 / 116TH STREET NE INTERCHANGE IMPROVEMENTS PHASE 4 RAMPS

SIGNALIZATION PLAN

Plot 2

PLAN REF NO SG2

SHEET 169 OF 238 SHEETS

SIGNAL STANDARD NOTES

1. INSTALL TYPE PS SIGNAL STANDARD ON EXISTING ANCHORAGE AND INSTALL PEDESTRIAN SIGNAL HEAD AND PUSH BUTTON ASSEMBLY 28.
2. CONSTRUCT SIGNAL STANDARD FOUNDATION AND INSTALL TYPE I SIGNAL STANDARD WITH VEHICLE SIGNAL HEAD 13, PEDESTRIAN SIGNAL HEAD AND PUSH BUTTON ASSEMBLY 29.
3. CONSTRUCT SIGNAL STANDARD FOUNDATION AND INSTALL TYPE FB SIGNAL STANDARD WITH 16 - FOOT POLE, VEHICLE SIGNAL HEADS 43 AND 84 AND ADVANCE EMERGENCY VEHICLE DETECTOR B1. INSTALL LOUVERS ON VEHICLE SIGNAL HEAD TO RESTRICT VISION FROM THE RIGHT TURN LANE. INSTALL DETECTOR 6 INCHES FROM THE TOP OF THE POLE.
4. INSTALL TYPE PS SIGNAL STANDARD WITH SPECIAL DESIGN ½" DIA. ANCHOR BOLTS TO UTILIZE EXISTING THREADED COUPLINGS IN EX. BRIDGE DECK AND INSTALL VEHICLE SIGNAL HEAD 71, PEDESTRIAN SIGNAL HEAD AND PUSH BUTTON ASSEMBLY 69A. UTILIZE ELECTRONIC LOCATING METHOD TO LOCATE EXISTING CONDUIT STUB AND CHIP AWAY SURFACE OF APPROACH SLAB (1" MAX THICKNESS) TO ACCESS EXISTING THREADED COUPLINGS. SEE SIGNING PLANS FOR SIGN 3 INSTALLATION.
5. INSTALL TYPE PS SIGNAL STANDARD ON EXISTING ANCHORAGE AND INSTALL PEDESTRIAN SIGNAL HEAD AND PUSH BUTTON ASSEMBLY 68A.
6. INSTALL TYPE PS SIGNAL STANDARD ON EXISTING ANCHORAGE AND INSTALL PEDESTRIAN SIGNAL HEAD AND PUSH BUTTON ASSEMBLY 68.
7. CONSTRUCT SIGNAL STANDARD FOUNDATION AND INSTALL TYPE I SIGNAL STANDARD WITH VEHICLE SIGNAL HEAD 53, PEDESTRIAN SIGNAL HEAD AND PUSH BUTTON ASSEMBLY 69.
8. INSTALL TYPE PS SIGNAL STANDARD WITH PEDESTRIAN SIGNAL HEAD ON EXISTING ANCHORAGE AND INSTALL VEHICLE SIGNAL HEAD 31, PEDESTRIAN SIGNAL HEAD AND PUSH BUTTON ASSEMBLY 29A.
9. CONSTRUCT SIGNAL STANDARD FOUNDATION AND INSTALL TYPE FB SIGNAL STANDARD WITH 16 - FOOT POLE, VEHICLE SIGNAL HEADS 44 AND 83 AND ADVANCE EMERGENCY VEHICLE DETECTOR D1. INSTALL LOUVERS ON VEHICLE SIGNAL HEAD TO RESTRICT VISION FROM THE RIGHT TURN LANE. INSTALL DETECTOR 6 INCHES FROM THE TOP OF THE POLE. SEE SIGNING PLANS FOR SIGN 9 INSTALLATION.
10. INSTALL TYPE PS SIGNAL STANDARD ON EXISTING ANCHORAGE AND INSTALL PEDESTRIAN SIGNAL HEAD AND PUSH BUTTON ASSEMBLY 28A.
11. INSTALL VEHICLE SIGNAL HEADS 11, 12, 21, 22, 41, 42, 51, 52, 61, 62, 81, AND 82, EMERGENCY DETECTORS A, B, C, AND D, VIDEO CAMERAS 3 & 7, AND TWO TRAFFIC SIGNS ON SIGN BRIDGE. SEE SB PLANS FOR SIGN BRIDGE CONSTRUCTION.

GENERAL SIGNAL NOTES

1. INSTALL A BONDING CABLE IN ALL EXISTING CONDUITS TO REMAIN THAT ARE PART OF THE ELECTRICAL SYSTEM MODIFIED OR ALTERED BY THIS CONTRACT. THE BONDING CABLE SHALL BE INSTALLED PER NEC REQUIREMENTS AND WSDOT SPECIAL PROVISIONS.
2. ALL EXISTING JUNCTION BOXES TO REMAIN THAT ARE A PART OF THE ELECTRICAL SYSTEM MODIFIED OR ALTERED BY THIS CONTRACT SHALL BE UPDATED TO CURRENT BONDING AND GROUNDING REQUIREMENTS OF THE NEC AND WSDOT SPECIAL PROVISIONS.
3. FURNISH AND INSTALL EXPANSION/DEFLECTION FITTINGS AT EVERY CONDUIT POINT THAT TRANSITIONS FROM STRUCTURE TO GRADE.
4. INSTALL A 4C PUSHBUTTON INTERCONNECT CABLE BETWEEN EACH APS PUSHBUTTON ASSEMBLEY AND CONTROL UNIT IN CORRESPONDING PEDESTRIAN SIGNAL HEADS.
5. ALL TYPE PS, I AND FB SIGNAL POLES SHALL BE INSTALLED WITH SLIP BASES PER STD PLAN J-21.10-04.

GENERAL SIGNAL EQUIPMENT REMOVAL NOTES

1. WHEN THE NEW SIGNAL SYSTEM IS INSTALLED AND FUNCTIONAL, THE CONTRACTOR SHALL REMOVE ALL EXISTING SIGNAL EQUIPMENT FROM BOTH RAMP TERMINAL INTERSECTIONS THAT IS NOT BEING UTILIZED BY THE PERMANENT SIGNAL SYSTEM OR AS A PART OF THE EXISTING ILLUMINATION SYSTEM DURING CONSTRUCTION. THIS INCLUDES, BUT IS NOT LIMITED TO, POLES WITH ATTACHED MESSENGER CABLES AND SIGNAL EQUIPMENT, FOUNDATIONS, JUNCTION BOXES, CONDUIT AND WIRE, CABINETS, SERVICE CONNECTIONS, AND OTHER MISCELLANEOUS EQUIPMENT. THE REMAINING EQUIPMENT SHALL BE REMOVED AS CONSTRUCTION PROGRESSES AND THE EQUIPMENT IS NO LONGER NEEDED.
2. REMOVE POLE AND CABINET FOUNDATIONS IN THEIR ENTIRETY. BACKFILL WITH CSBC AND COMPACT.
3. SEE SPECIAL PROVISIONS FOR REMOVAL REQUIREMENTS, RESTORATION, DISPOSAL, AND ITEMS TO BE SALVAGED.

SIGNAL CONSTRUCTION NOTES

1. FURNISH AND INSTALL TYPE 332D CONTROLLER CABINET WITH TYPE 2070L CONTROLLER, AND TYPE 332 CABINET WITH UNINTERUPTABLE POWER SUPPLY ON EXISTING FOUNDATION. SEE ITS PLANS FOR CAT6 COMMUNICATION CABLE CONNECTIONS. INSTALL CABINETS WITH FRONT CONTROLLER CABINET DOOR FACING NORTH AND DOOR FOR THE UPS CABINET, FACING SOUTH.
2. REPLACE EXISTING JUNCTION BOX WITH WSDOT TYPE 8 JUNCTION BOX.
3. INSTALL TYPE 3 STOP LINE LOOP PER STD. PLAN J-50.12-00. SEE DETAIL 1, SHEET SG5 FOR LOOP LOCATIONS.
4. INSTALL TYPE 3 ADVANCE LOOP PER STD. PLAN J-50.12-00. SEE DETAIL 1, SHEET SG5 FOR LOOP LOCATIONS.
5. INSTALL TYPE 1 JUNCTION BOX AT BACK OF SHOULDER PER STD. PLAN J-10. COORDIANTE WITH GUARDRAIL POST PLACEMENT (WHERE APPLICABLE).
6. REMOVE AND SALVAGE EX. SIGNAL SYSTEM COMPONENTS, INCLUDING BUT NOT LIMITED TO CONNECTED WIRE, CONDUIT, PUSH BUTTONS, SIGNAL HEADS, TIMBER POLES, MESSENGER CABLES, JUNCTION BOXES, CABINETS AND RELATED COMPONENTS. SEE GENERAL SIGNAL EQUIPMENT REMOVAL NOTES.
7. INSTALL TERMINAL CABINET ON SIGN BRIDGE SUPPORT.
8. REMOVE AND SALVAGE BOLLARD FROM EXISTING SIGNAL ANCHORAGE.
9. REPLACE EXISTING JUNCTION BOX WITH WSDOT TYPE 8 JUNCTION BOX AND RELOCATE BOX AND EXISTING CONDUIT SWEEPS TO BACK OF PROPOSED CURB.
10. CONNECT NEW CONDUIT TO EXISTING CONDUIT IN BARRIER ON BRIDGE WITH CONDUIT DEFLECTION FITTING TYPE "B" PER STANDARD PLAN J-60.11-00 WITH MODIFICATIONS AS INDICATED IN DETAILS ON TB SHEETS.
11. INSTALL TWO NEMA 4X NON-ADJUSTABLE S.S. JUNCTION BOXES IN TRAFFIC BARRIER AT END OF MOMENT SLAB PER WSDOT STANDARD PLAN J-60.11-00 WITH MODIFICATIONS AS INDICATED IN DETAILS ON TB SHEETS.
12. ROUTE CONDUITS FROM GROUND INTO JUNCTION BOXES IN TRAFFIC BARRIER. SEE DETAILS ON WSDOT STANDARD PLAN J-60.11-00 FOR CONDUIT TRANSITIONS AND DEFELCTION FITTINGS.
13. RELOCATE EX GROUND RODS AND ASSOICATED CONDUIT, CONDUCTORS, AND ENCLOSURES TO ACCOMODATE NEW BARRIER.

SPARE CONDUIT SYSTEM JUNCTION BOX LOCATIONS

BOX NO.	STATION	OFFSET	TYPE	NOTES
51	M 118+62	75' RT	1	
52	(1)	(1)	1	
53	M 118+62	90' LT	1	
54	(2)	(2)	1	
55	M 121+47	115' RT	1	
56	(3)	(3)	1	
57	M 121+40	60' LT	1	
58	(4)	(4)	1	
59-66	(5)	(5)	1	

(1) INSTALL ADJACENT TO BOX 51.
(2) INSTALL ADJACENT TO BOX 53.
(3) INSTALL ADJACENT TO BOX 55.
(4) INSTALL ADJACENT TO BOX 57.
(5) INSTALL AT BACK OF SHOULDER. (COORDINATE WITH GUARDRAIL POSTS WHERE APPLICABLE)

NOTE: SEE SIGNAL PLAN SHEETS FOR ADDITIONAL JUNCTION BOXES ON THIS SYSTEM.

SIGNAL CONDUIT/WIRE SCHEDULE

RUN NO. △	CONDUIT SIZE	VEH DET 2C/S	VIDEO CAMERA (1)	PPB 2C/S	EVP DET 3C/S	VEH HEAD 5C	PED HEAD 5C	SERVICE	NOTES
1	2"	1							
2	2"	2							
3	EX 2"								EX SPARE (4)
4	2"	6							
5	2"	8							
6	2"								SPARE (5)
7	EX 1¼"			1		1	1		
8	EX 1¼"			1			1		
9	EX 2"			2			2		
10	2"			1		1	1		
11	EX 2"			2			2		
	EX 2"								SPARE
12	2 - 3"	10		3		1	3		
13	2"				1	2			
14	NOT USED								NOT USED
15	NOT USED								NOT USED
16	2"	2		1	1	3	1		
17	EX 2 - 3"	12		2	1	4	2		
	EX 2"								SPARE
18	EX 3"		2		4	6			
	EX 3"								SPARE
19	EX 3"			1	1	3	1		
20	EX 2 - 3"	11		4	1	4	4		
	EX 3"								SPARE
21	EX 2 - 4"	23	2	8	6	14	8		
	EX 3"								SPARE
22	EX 2"							2-#6 (480V) CKT H-5	(2)
23	EX 2"							2-#6 (480V)	(3)
24	2"								SPARE

SIGNAL CONDUIT/WIRE SCHEDULE NOTES

(1) PER MANUFACTURER'S SPECIFICATIONS
(2) POWER SUPPLY TO UPS.
(3) POWER SUPPLY TO CONTROLLER CABINET
(4) CONDUIT IN EX BRIDGE BARRIER
(5) CONDUIT IN TRAFFIC BARRIER. SEE WSDOT STANDARD PLAN J-60.11-00.

CONDUIT/WIRE GENERAL NOTES

1. ALL CONDUITS INSTALLED ABOVE GROUND SHALL BE RGS.
2. ALL CONDUITS INSTALLED IN FORMED CONCRETE OR IN TRENCH SHALL BE PVC SCHEDULE 80.
3. ALL PVC CONDUITS INSTALLED IN THE TRAVELED WAY OR PAVED SHOULDERS SHALL BE SCHEDULE 80.
4. INSTALL GROUNDING SYSTEM PER STANDARD SPECIFICATIONS.

FILE NAME	U:\PSO\Projects\Clients\1598-TulalipTribes\554-1598-095 116th-Ph4-PSE\99Svcs\CADD\DGN\PS&ESheets\BL1598033_PS_SG.dgn
TIME	3:35:47 PM
DATE	8/13/2017
PLOTTED BY	purgabut
DESIGNED BY	E. SCHOTT
ENTERED BY	M. KENDALL
CHECKED BY	C. CLARK
APPROVED BY	H. LONGFELLOW
REGIONAL ADM.	

REVISION	DATE	BY

REGION NO.	STATE	FED.AID PROJ.NO.
10	WASH	
JOB NUMBER		
CONTRACT NO.		LOCATION NO.

P.E. STAMP BOX — DATE

E. CHARLES SCHOTT — STATE OF WASHINGTON — 33242 — REGISTERED PROFESSIONAL ENGINEER
8-25-17 DATE
P.E. STAMP BOX

TULALIP TRIBES — Parametrix

I-5 / 116TH STREET NE INTERCHANGE IMPROVEMENTS PHASE 4 RAMPS

SIGNALIZATION NOTES

Plot 3
PLAN REF NO SG3
SHEET 170 OF 238 SHEETS

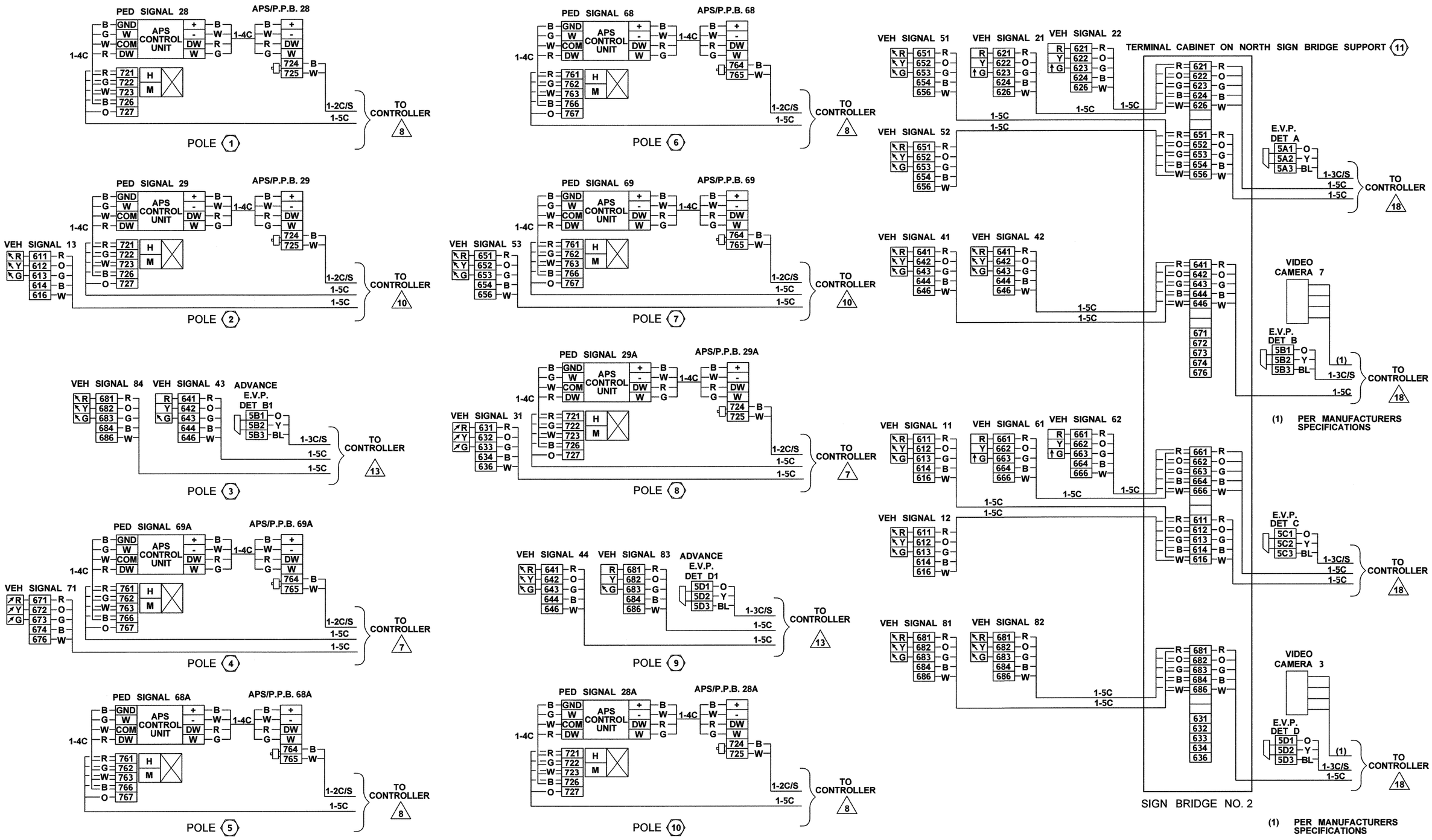

FILE NAME	U:\PSO\Projects\Clients\1598-TulalipTribes\554-1598-095 116th-Ph4-PSE\99Svcs\CADD\DGN\PS&ESheets\BL1598033_PS_SG.dgn						
TIME	3:35:58 PM				REGION NO. 10	STATE WASH	FED.AID PROJ.NO.
DATE	8/13/2017				JOB NUMBER		
PLOTTED BY	purgabut						
DESIGNED BY	E. SCHOTT				CONTRACT NO.		LOCATION NO.
ENTERED BY	M. KENDALL						
CHECKED BY	C. CLARK						
APPROVED BY	H. LONGFELLOW						
REGIONAL ADM.		REVISION	DATE	BY			

DATE
P.E. STAMP BOX

E. CHARLES SCHOTT STATE OF WASHINGTON 33242 REGISTERED PROFESSIONAL ENGINEER
8-25-17
DATE
P.E. STAMP BOX

TULALIP TRIBES
Parametrix

I-5 / 116TH STREET NE INTERCHANGE IMPROVEMENTS PHASE 4 RAMPS

SIGNALIZATION NOTES AND DETAILS

Plot 4

PLAN REF NO SG4

SHEET 171 OF 238 SHEETS

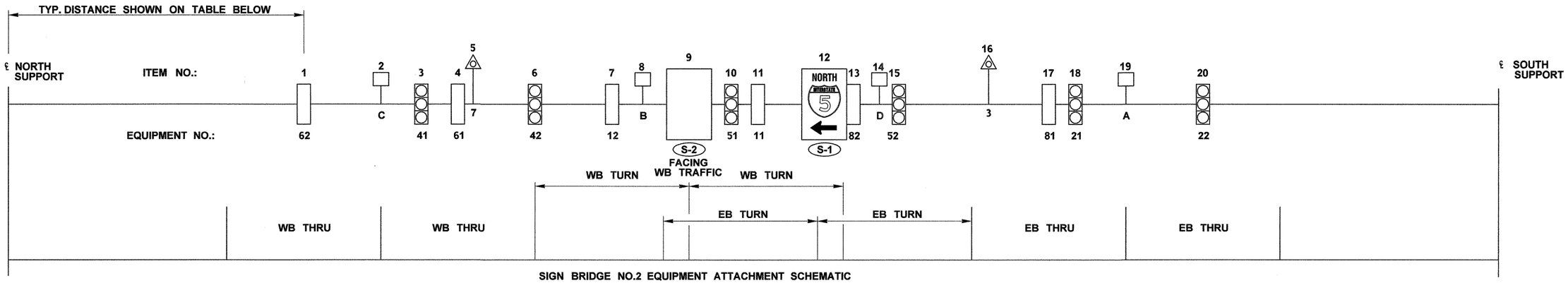

SIGN BRIDGE NO.2 EQUIPMENT ATTACHMENT SCHEMATIC
(LOOKING EAST)

SIGN BRIDGE EQUIPMENT ATTACHMENT LOCATIONS AND LOADING TABLE

ITEM NO.	DISTANCE FROM ℄ OF NORTH SUPPORT	ATTACHMENT ORIENTATION (2)		EQUIPMENT DESCRIPTION AND NO.	WIND LOAD AREA (FT^2)	NOTES
		WEST SIDE	EAST SIDE			
1	27'	-	X	VEH SIG 62	9.2	(1)
2	33'	-	-	EVP DET C	N/A	(3)
3	36'	X	-	VEH SIG 41	9.2	(1)
4	39'	-	X	VEH SIG 61	9.2	(1)
5	42'	-	-	CAMERA 7	N/A	(4)
6	48'	X	-	VEH SIG 42	9.2	(1)
7	52'	-	X	VEH SIG 12	9.2	(1)
8	55'	-	-	EVP DET B	N/A	(3)
9	58'	-	X	SIGN 113	32.0	(5)
10	61'	X	-	VEH SIG 51	9.2	(1)
11	64'	-	X	VEH SIG 11	9.2	(1)
12	67'	X	-	SIGN 112	32.0	(5)
13	68'	-	X	VEH SIG 82	9.2	(1)
14	71'		-	EVP DET D	N/A	(3)
15	73'	X	-	VEH SIG 52	9.2	(1)
16	75'	-	-	CAMERA 3	N/A	(4)
17	83'	-	X	VEH SIG 81	9.2	(1)
18	85'	X	-	VEH SIG 21	9.2	(1)
19	91'	-	-	EVP DET A	N/A	(3)
20	97'	X	-	VEH SIG 22	9.2	(1)

(1) INSTALL 8" LONG PIPE TENON FOR VEHICLE SIGNAL HEAD W/ TYPE "LE" MOUNTING HARDWARE AT LOCATION NOTED.

(2) WHERE ORIENTATION IS NOT NOTED, EQUIPMENT SHALL BE INSTALLED ON THE TOP OF THE SIGN BRIDGE AND ORIENTED AS SHOWN ON THE PLANS.

(3) FIELD DRILL AND TAP FOR EVP DETECTOR AT APPROX. LOCATION SHOWN. FIELD ADJUST PRIOR TO DRILLING FOR MAXIMUM VISIBILITY.

(4) FIELD INSTALL PER MANUFACTURER'S RECOMMENDATIONS.

(5) SEE SIGNING PLANS FOR SIGN DETAILS AND INSTALLATIONS.

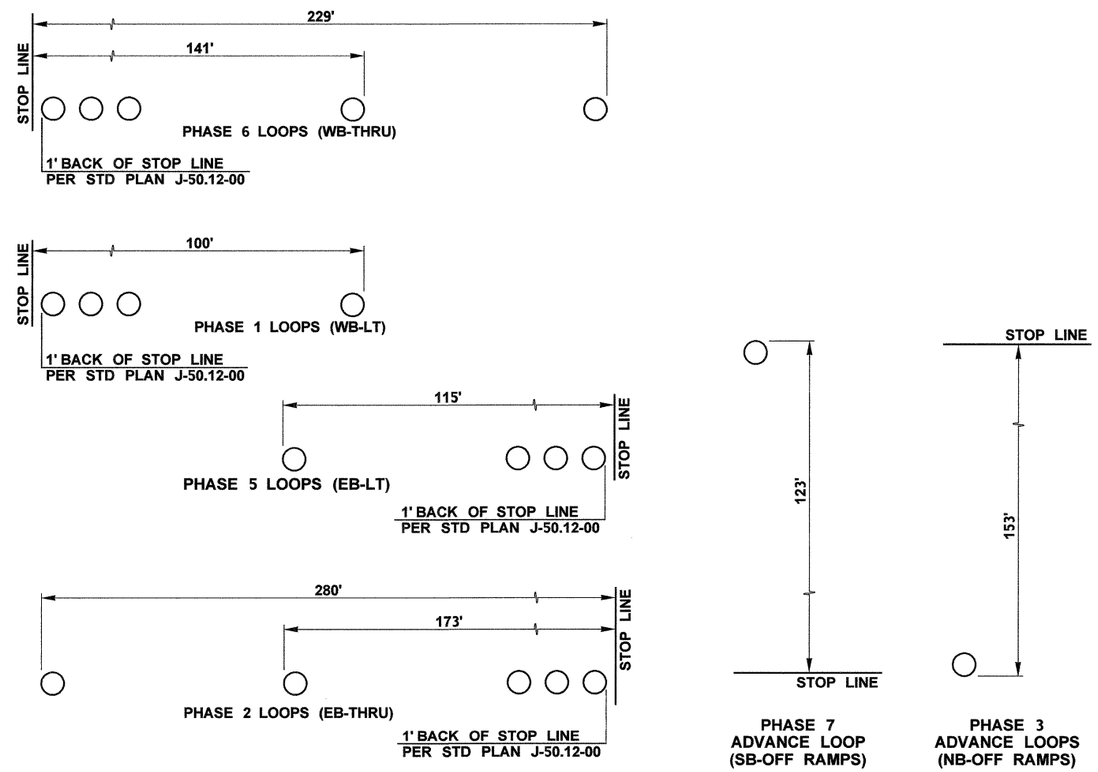

DETAIL 1
VEHICLE DETECTION LOOP LOCATIONS

FILE NAME	U:\PSO\Projects\Clients\1598-TulalipTribes\554-1598-095 116th-Ph4-PSE\99Svcs\CADD\DGN\PS&ESheets\BL1598033_PS_SG.dgn
TIME	4:23:50 PM
DATE	8/24/2017
PLOTTED BY	valenalv
DESIGNED BY	E. SCHOTT
ENTERED BY	M. KENDALL
CHECKED BY	C. CLARK
APPROVED BY	H. LONGFELLOW
REGIONAL ADM.	

REVISION | DATE | BY

REGION NO. 10 | STATE WASH | FED.AID PROJ.NO.

JOB NUMBER

CONTRACT NO. | LOCATION NO.

P.E. STAMP BOX — DATE

E. CHARLES SCHOTT — STATE OF WASHINGTON — 33242 — REGISTERED PROFESSIONAL ENGINEER — 8-25-17 — DATE — P.E. STAMP BOX

TULALIP TRIBES — Parametrix

I-5 / 116TH STREET NE
INTERCHANGE IMPROVEMENTS
PHASE 4 RAMPS

SIGNALIZATION NOTES AND DETAILS

Plot 5
PLAN REF NO SG5
SHEET 172 OF 238 SHEETS

CABINET WIRE TERMINATIONS

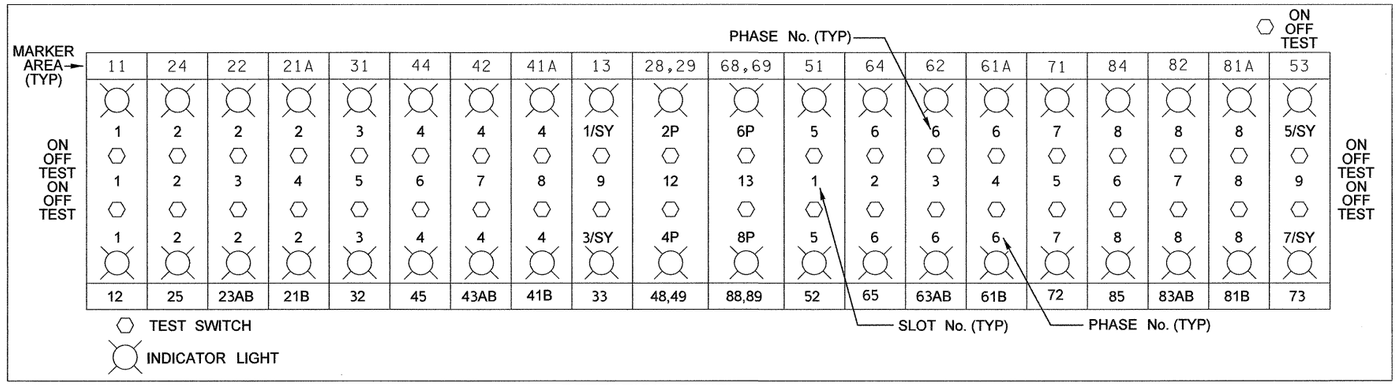

DETECTION PANEL
INSTALL ABOVE THE CONTROLLER

DETECTION INPUT TERMINALS

TB 2

111, 121	B/W	816	1	I1D	Φ1U
		817	2	I1E	
112, 122	B/W	818	3	I1J	Φ1L
		819	4	I1K	
213, 223	B/W	921	5	I2D	Φ2U
		922	6	I2E	
		923	7	I2J	Φ2L
		924	8	I2K	
		925	9	I3D	Φ2U
		926	10	I3E	
212, 222	B/W	927	11	I3J	Φ2L
		928	12	I3K	

TB 3

Φ5U	J1D	1	856	B	511, 521
	J1E	2	857	W	
Φ5L	J1J	3	858	B	512, 522
	J1K	4	859	W	
Φ6U	J2D	5	961	B	613, 623
	J2E	6	962	W	
Φ6L	J2J	7	963		
	J2K	8	964		
Φ6U	J3D	9	965		
	J3E	10	966		
Φ6L	J3J	11	967	B	612, 622
	J3K	12	968	W	

TB 4

211	B/W	826	1	I4D	Φ2U
		827	2	I4E	
221	B/W	828	3	I4J	Φ2L
		829	4	I4K	
		836	5	I5D	Φ3U
		837	6	I5E	
		838	7	I5J	Φ3L
		839	8	I5K	
413	B/W	941	9	I6D	Φ4U
		942	10	I6E	
		943	11	I6J	Φ4L
		944	12	I6K	

TB 5

Φ6U	J4D	1	866	B	611
	J4E	2	867	W	
Φ6L	J4J	3	868	B	621
	J4K	4	869	W	
Φ7U	J5D	5	876		
	J5E	6	877		
Φ7L	J5J	7	878		
	J5K	8	879		
Φ8U	J6D	9	981	B	813
	J6E	10	982	W	
Φ8L	J6J	11	983	B	823
	J6K	12	984	W	

TB 6

945	1	I7D	Φ4U
946	2	I7E	
947	3	I7J	Φ4L
948	4	I7K	
846	5	I8D	Φ4U
847	6	I8E	
848	7	I8J	Φ4L
849	8	I8K	
911	9	I9D	
912	10	I9E	
931	11	I9J	
932	12	I9K	

TB 7

Φ8U	J7D	1	985
	J7E	2	986
Φ8L	J7J	3	987
	J7K	4	988
Φ8U	J8D	5	886
	J8E	6	887
Φ8L	J8J	7	888
	J8K	8	889
	J9D	9	951
	J9E	10	952
	J9J	11	971
	J9K	12	972

SERVICE PANEL

TBS

B	501	1	AC+
GRD		2	CG
W	502	3	AC-
		4	
		5	

TB 8

		1		
		2		
		3		
PPB 28,28A,29,29A	B	724	4	I12D Φ2P
		744	5	I12J Φ4P
PPB 28,28A,29,29A	W	725	6	I12K COM
PPB 68,68A,69,69A	B	764	7	I13D Φ6P
		784	8	I13J Φ8P
PPB 68,68A,69,69A	W	765	9	I13K COM
			10	
			11	
			12	

TB 9

		1			
DC-		2	5AC3	BL	A&C
	J13K	3	5BD3	BL	B&D
EVA	J12D	4	5A2	Y	A
EVC	J12J	5	5C2	Y	C
DC+	J12E	6	5AC1	O	A&C
EVB	J13D	7	5B2	Y	B
EVD	J13J	8	5D2	Y	D
DC+	J13E	9	5BD1	O	B&D
RR1	J14D	10	516		
RR2	J14J	11	517		
COM	J14E	12	518		

INPUT FILE MARKING DETAIL

	1	2	3	4	5	6	7	8	9	10	11	12	13	14	
U	111,121	213,223		211	312,322	44		V411				28,29	68,69		MARKER AREA
I															
L	112,122		212,222	221				V412	V711						MARKER AREA
U	511,512	613,623		611	713			V811				EVA	EVB	RR1	
J															
L	512,522		612,622	621				V821	V311			EVC	EVD	RR2	MARKER AREA

AUXILIARY PREEMPTION (CONNECTED VIA 262W WIRE HARNESS TO M262 DISCRIMINATOR)

TB10

1	2	3	4	5	6	7	8	9	10	11	12
A&C AUX	A&C AUX	A AUX	A AUX	C AUX	C AUX	B&D AUX	B&D AUX	B AUX	B AUX	D AUX	D AUX
						O	BL	Y		Y	
						B1 D1	B1 D1	B1		D1	

INPUT FILE LAYOUT - PROGRAM MAXTIME

	1	2	3	4	5	6	7	8	9	10	11	12	13	14
U	Φ1E,C	Φ2E,C	Φ2E,C	Φ2C	Φ3E,C	Φ4E,C	Φ4E,C	Φ4C	Φ1E,C			Φ2P	Φ6P	FLH
	111,121	213,223		211		413		V411				28,29 28A,29A	68,69 68A,69A	
I	112,122 222	222	212,222 222	221 222	222	222	222	V412 4 CH VIDEO CARD	V711			242	242	
L	Φ1E,C	Φ2E,C	Φ2E	Φ2C	Φ3E,C	Φ4E,C	Φ4E	Φ4C	Φ7E,C**			Φ4P	Φ8P	ST
U	Φ5E,C	Φ6E,C	Φ6E,C	Φ6C	Φ7E,C	Φ8E,C	Φ8E,C	Φ8C	Φ5E,C			EVA	EVB	RR1
J	511,521	613,623		611		813		V811				A	B	
	512,522 222	222	612,622 222	621 222	222	823 222	222	V821 4 CH VIDEO CARD	V311			C *	D *	
L	Φ5E,C	Φ6E,C	Φ6E	Φ6C	Φ7E,C	Φ8E,C	Φ8E	Φ8C	Φ3E,C**			EVC	EVD	RR2

XX-XX INPUT NO.
XX-XX INPUT NO.
XXX MODEL TYPE

E = EXTENSION
C = CALL

* SEE SPECIAL PROVISIONS
** NON-STANDARD INPUT TO ACCOMMODATE VIDEO DETECTION CARD TO SERVE TWO PHASES.

DISPLAY OUTPUT TERMINALS

641	101	Φ4R	28 28A 29 29A	O	721	113	Φ2DW	11 12	R	611	125	Φ1R
642	102	Φ4Y			5A4	114	EVIA		O	612	126	Φ1Y
643	103	Φ4G		BL	722	115	Φ2W		G	613	127	Φ1G
741	104	Φ4DW	31 32 33 34	R	631	116	Φ3R	21 22	R	621	128	Φ2R
5B4	105	EVIB		O	632	117	Φ3Y		O	622	129	Φ2Y
742	106	Φ4W		G	633	118	Φ3G		G	623	130	Φ2G
681	107	Φ8R	68 68A 69 69A	O	761	119	Φ6DW	51 52	R	651	131	Φ5R
682	108	Φ8Y			5C4	120	EVIC		O	652	132	Φ5Y
683	109	Φ8G		BL	762	121	Φ6W		G	653	133	Φ5G
781	110	Φ8DW	71 72 73	R	671	122	Φ7R	61 62	R	661	134	Φ6R
5D4	111	EVID		O	672	123	Φ7Y		O	662	135	Φ6Y
782	112	Φ8W		G	673	124	Φ7G		G	663	136	Φ6G

NOTE:
TERMINATE ALL WIRING IDENTIFIED AS AC- (6*6 AND 7*3) AT THE AC- BUSS

COIL AND SEAL ALL SPARE CONDUCTORS AND STORE NEATLY IN THE PULL BOX IN FRONT OF THE CABINET.

FILE NAME	U:\PSO\Projects\Clients\1598-TulalipTribes\554-1598-095 116th-Ph4-PSE\99Svcs\CADD\DGN\PS&ESheets\BL1598033_PS_SG.dgn
TIME	9:07:24 AM
DATE	8/25/2017
PLOTTED BY	valenalv
DESIGNED BY	E. SCHOTT
ENTERED BY	M. KENDALL
CHECKED BY	C. CLARK
APPROVED BY	H. LONGFELLOW
REGIONAL ADM.	

REVISION | DATE | BY

REGION NO. 10 | STATE WASH | FED.AID PROJ.NO.
JOB NUMBER
CONTRACT NO. | LOCATION NO.

P.E. STAMP BOX — DATE

E. CHARLES SCHOTT — STATE OF WASHINGTON — 33242 — REGISTERED PROFESSIONAL ENGINEER — 8-25-17 DATE — P.E. STAMP BOX

TULALIP TRIBES — Parametrix

I-5 / 116TH STREET NE INTERCHANGE IMPROVEMENTS PHASE 4 RAMPS

SIGNALIZATION NOTES AND DETAILS

Plot 6
PLAN REF NO SG6
SHEET 173 OF 238 SHEETS

FOUNDATION DEPTH TABLE							
ALLOWABLE LATERAL BEARING PRESSURE (psf)	FOUNDATION TYPE	XYZ (CUBIC FEET) TYPE II,III AND SD MAST ARM STANDARDS					
		600	900	1,200	1,500	1,900	2,300
1,000	3' ROUND	10'	10'	11'	11'	13'	15'
	3' SQUARE	8'	8'	9'	9'	10'	11'
	4' ROUND	8'	8'	9'	9'	10'	11'
1,500	3' ROUND	8'	8'	9'	11'	13'	15'
	3' SQUARE	7'	7'	7'	8'	8'	9'
	4' ROUND	7'	7'	7'	8'	8'	9'
2,500	3' ROUND	6'	6'	7'	11'	13'	15'
	3' SQUARE	6'	6'	6'	6'	7'	7'
	4' ROUND	6'	6'	6'	6'	7'	7'

THIS TABLE BASED ON A ø VALUE OF 26°. FOR DOUBLE MAST ARM STANDARDS WITH 90° BETWEEN ARMS, USE THE LARGER XYZ VALUE FOR FOUNDATION DEPTH SELECTION. A SPECIAL FOUNDATION DESIGN IS REQUIRED FOR DOUBLE ARM STANDARDS IF THE ANGLE IS NOT 90°.

SIGNAL STANDARD IDENTIFICATION TAG DETAIL

STD. NO. XX	SIGNAL STANDARD NO.	STD. NO. 02
SRXXX, MP XXX.XX	STATE ROUTE AND MILE POST NO.	SR97, MP 069.09
MANUFACTURER APPROVED DWG. XXXXXX	APPROVED DRAWING NO.	MANUFACTURER APPROVED DWG. AB12345
FAB. X/XX/XXXX	FABRICATION DATE	FAB. 6/14/2002
		EXAMPLE

TAG NOTES:
CORROSION RESISTANT METAL TAG SECURED WITH (2) 0.125" RIVETS AS FOLLOWS:
- POLE SHAFT - LOCATED WITHIN 6" ABOVE HAND HOLE (TYPE II & III).
- SIGNAL AND LUMINAIRE MAST ARM (TYPE II & III) - LOCATED WITHIN 6" OF THE LUMINAIRE ARM AND THE POLE SHAFT CONNECTION POINT (TYPE III). TEXT SHALL BE A MINIMUM OF 3/16" HIGH, STAMPED OR EMBOSSED.

LUMINAIRE MAST ARM X Y Z (ft^3)	
MAST ARM LENGTH	X Y Z (ft^3)
6'	19.8
8'	26.4
10'	33.0
12'	39.6
14'	46.2
16'	52.8

STANDARD TYPE		STANDARD PLAN REFERENCES			
		POLE	FOUNDATION		ELECTRICAL
			STANDARD	CURB	
PPB	FIXED	J-20.10	J-20.10	J-20.11	J-20.10
	BREAKAWAY	J-20.15	J-20.15		J-20.15
PS		J-20.16	J-21.10		J-20.20
I		J-21.15	J-21.10		J-21.20
FB		J-21.16	J-21.10		J-21.20
II, III, SD		N/A	J-26.10, J-26.15	N/A	N/A

NOTES

(1) MOUNTING COUPLING INSTALLED AT OFFSET DISTANCE INDICATED IN CHART. FOR TYPE N MOUNTS ONLY, DRILL 1" DIA. HOLE IN MAST ARM AND INSTALL PLASTIC SPLIT BUSHING FOR CABLE ENTRANCE.

(2) FIELD INSTALLED. SIGN SIZES SHALL NOT EXCEED THE MAXIMUM VALUES LISTED HERE:

SIGN	HEIGHT	WIDTH	AREA
b	3.0 FT	N/A	7.5 SQ. FT.
c	3.0 FT	N/A	36.0 SQ. FT.
e	N/A	3.0 FT	15.0 SQ. FT.

(3) 1' - 0" MIN. TO 2' - 6" MAX. FROM POLE CENTERLINE TO SIGN EDGE

(4) FOR POST MOUNTED SIGNS THERE SHALL BE 2' - 0" MIN. FROM THE FACE OF THE CURB OR THE EDGE OF THE SHOULDER TO THE EDGE OF THE SIGN

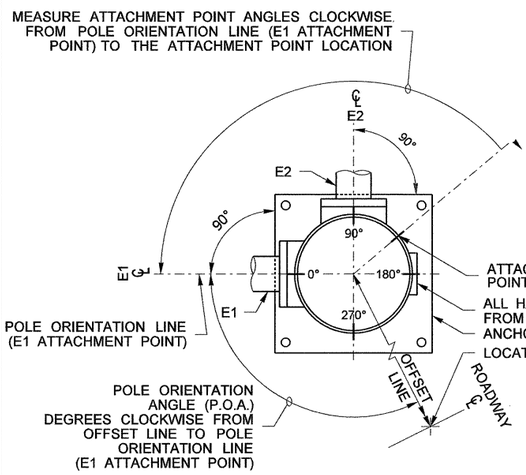

POLE ORIENTATION AND ATTACHMENT POINT DETAIL

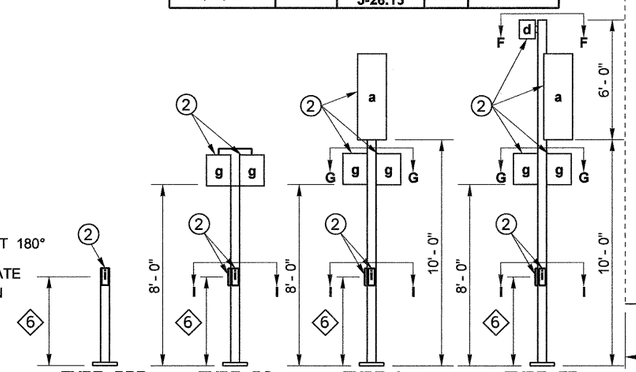

TYPE PPB PPB POST | TYPE PS PED. HEAD STANDARD | TYPE I VEHICLE HEAD STANDARD | TYPE FB VEHICLE HEAD STANDARD

(6) 3' - 6" MEASURED FROM SIDEWALK SURFACE TO CENTER OF PEDESTRIAN PUSH BUTTON

(7) DMS OR VMS IS NOT ALLOWED ON THESE POLES.

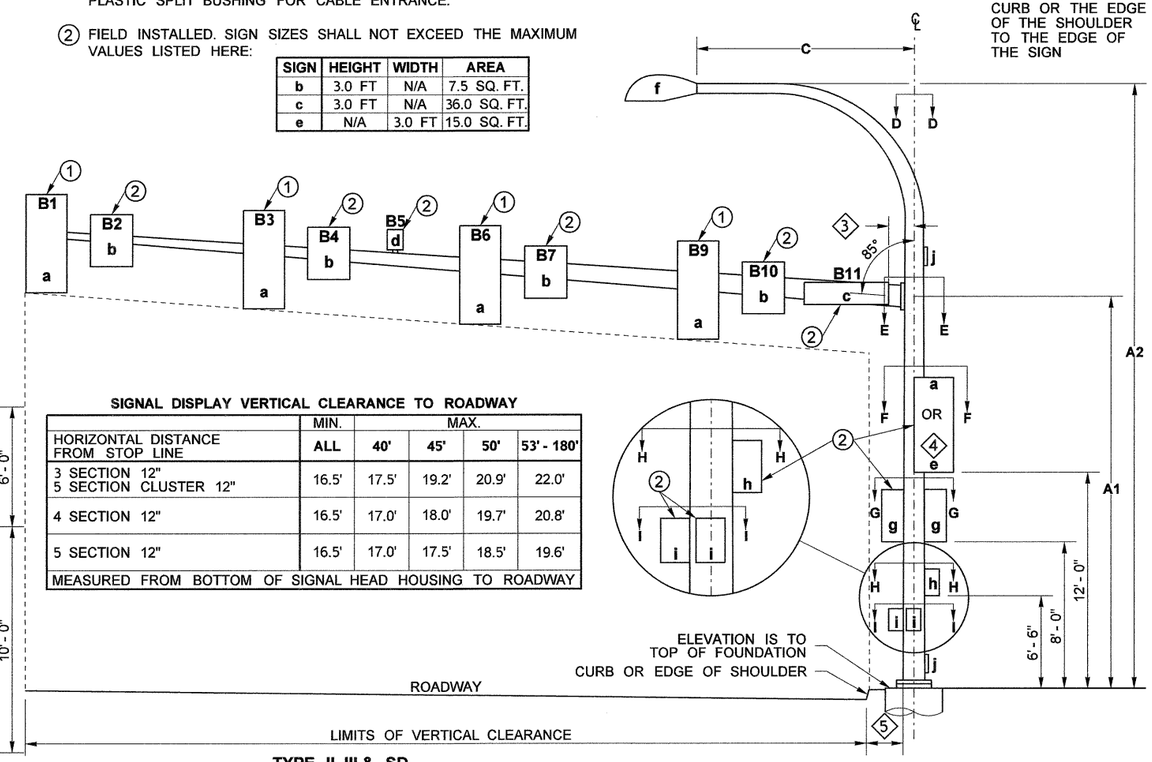

SIGNAL DISPLAY VERTICAL CLEARANCE TO ROADWAY

HORIZONTAL DISTANCE FROM STOP LINE	MIN.	MAX.			
	ALL	40'	45'	50'	53' - 180'
3 SECTION 12" 5 SECTION CLUSTER 12"	16.5'	17.5'	19.2'	20.9'	22.0'
4 SECTION 12"	16.5'	17.0'	18.0'	19.7'	20.8'
5 SECTION 12"	16.5'	17.0'	17.5'	18.5'	19.6'
MEASURED FROM BOTTOM OF SIGNAL HEAD HOUSING TO ROADWAY					

TYPE II, III & SD SIGNAL STANDARD

(5) PLACEMENT SHALL BE 2' - 0" MIN. FROM FACE OF CURB OR EDGE OF SHOULDER; 3' - 0" MIN. FROM FACE OF GUARDRAIL; 4' - 0" MIN. FROM CONC. BARRIER TYPE 2 (MEASURED FROM A POINT WHERE THE BARRIER BASE MEETS THE SHOULDER SURFACE (TOE). MEASUREMENT TAKEN FROM TRAFFIC SIDE OF BARRIER; TO FACE OF POLE)

SIGNAL STANDARD DETAIL CHART

STD. No.	SR No.	SR MILE POST	FIELD LOCATION STATION	OFFSET	LT.	RT.	P.O.A.	POLE TYPE	MOUNTING HEIGHT (FT) A1	A2	SIGNAL MAST ARM DATA OFFSETS (FT) (Z) (POLE ℄ TO ATTACHMENT POINT) B1	B2	B3	B4	B5	B6	B7	B8	B9	B10	B11	WINDLOAD AREAS (FT^2) (X)(Y) B1	B2	B3	B4	B5	B6	B7	B8	B9	B10	B11	LUMINAIRE ARM (FT) C	CALCULATED POLE XYZ (FT^3) **	POLE ATTACHMENT POINT ANGLES (deg.) D	E1	E2	F	G1	G2	H	I1	I2	FOUNDATION DESIGN XYZ (FT^3)	SOIL BEARING PRESSURE (PSF)	FOUNDATION DEPTH (FT) ALTERNATE 1 3' RD.	3' SQ.	4' RD.	ALTERNATE 2 3' RD.	4' RD.	REMARKS X
1			ES 122+15.5	17.0'		X	0(4)	PS																																													2
2			ES 121+92.3	56.1'	X		0	I																																													1
3			M 118+80.0	65.0'	X		0(4)	FB																																													1
4			NE 123+29.0	33.0'	X		0(4)	PS																																													2
5			NE 123+32.0	15.0'		X	0(4)	PS																																													2
6			WN 123+21.0	14.5'	X		0(4)	PS																																													2
7			WN 123+39.0	61.1'		X	0	I																																													1
8			SW 121+89.0	48.0'		X	0	PS																																													2
9			M 121+30.0	68'.0		X	0	FB																																													1
10			SW 121+92.0	16.0'	X		0(4)	PS																																													2
11			(3)	(3)				(3)																																													2

(1) FIELD ORIENT FOR MAX VISIBILITY FROM RAMP ON OPPOSITE SIDE OF ROADWAY.
(2) FIELD ORIENT TO SET BUTTON FACE TO BE PARALLEL WITH CROSSWALK AND FACING TOWARDS INTERSECTION.
(3) SIGN BRIDGE SUPPORT. SEE BRIDGE PLANS.
(4) POLE ORIENTATION ANGLE NOTED IS PER RECORD DRAWINGS AND DOES NOT NECESSARILY CORRESPOND WITH ORIENTATION OF EX. ANCHORAGE BOLTS. ATTACHMENT ANGLES SHALL BE MEASUREED USING THIS ASSUMED P.O.A.

****CALCULATED POLE XYZ (FT^3) IS THE SUM OF THE TOTAL XYZ (FT^3) FOR THE SIGNAL ARM AND THE XYZ (FT^3) FOR THE LUMINAIRE ARM (IF PRESENT).**

LEGEND

a. VEHICLE DISPLAY
b. MAST ARM MTD. SIGN
c. STREET NAME SIGN
d. PRE-EMPT DETECTOR
e. POST MTD. SIGN
f. LUMINAIRE
g. PEDESTRIAN DISPLAY
h. TERMINAL CABINET
i. APS PPB-M
j. HANDHOLE

NOTES:
1. SEE WSDOT STANDARD PLAN J-21.10-04 FOR FOUNDATION DETAILS.
2. INSTALL ON EXISTING FOUNDATION.

FILE NAME	U:\PSO\Projects\Clients\1598-TulalipTribes\554-1598-095 116th-Ph4-PSE\99Svcs\CADD\DGN\PS&ESheets\BL1598033_PS_SG.dgn
TIME	3:36:33 PM
DATE	8/13/2017
PLOTTED BY	purgabut
DESIGNED BY	E. SCHOTT
ENTERED BY	M. KENDALL
CHECKED BY	C. CLARK
APPROVED BY	H. LONGFELLOW
REGIONAL ADM.	

REVISION | DATE | BY

REGION NO. 10 | STATE WASH | FED.AID PROJ.NO.
JOB NUMBER
CONTRACT NO. | LOCATION NO.

P.E. STAMP BOX — DATE

E. CHARLES SCHOTT, STATE OF WASHINGTON, 33242, REGISTERED PROFESSIONAL ENGINEER — 8-25-17 DATE

TULALIP TRIBES — Parametrix

I-5 / 116TH STREET NE INTERCHANGE IMPROVEMENTS PHASE 4 RAMPS

SIGNALIZATION NOTES AND DETAILS

Plot 7
PLAN REF NO SG7
SHEET 174 OF 238 SHEETS

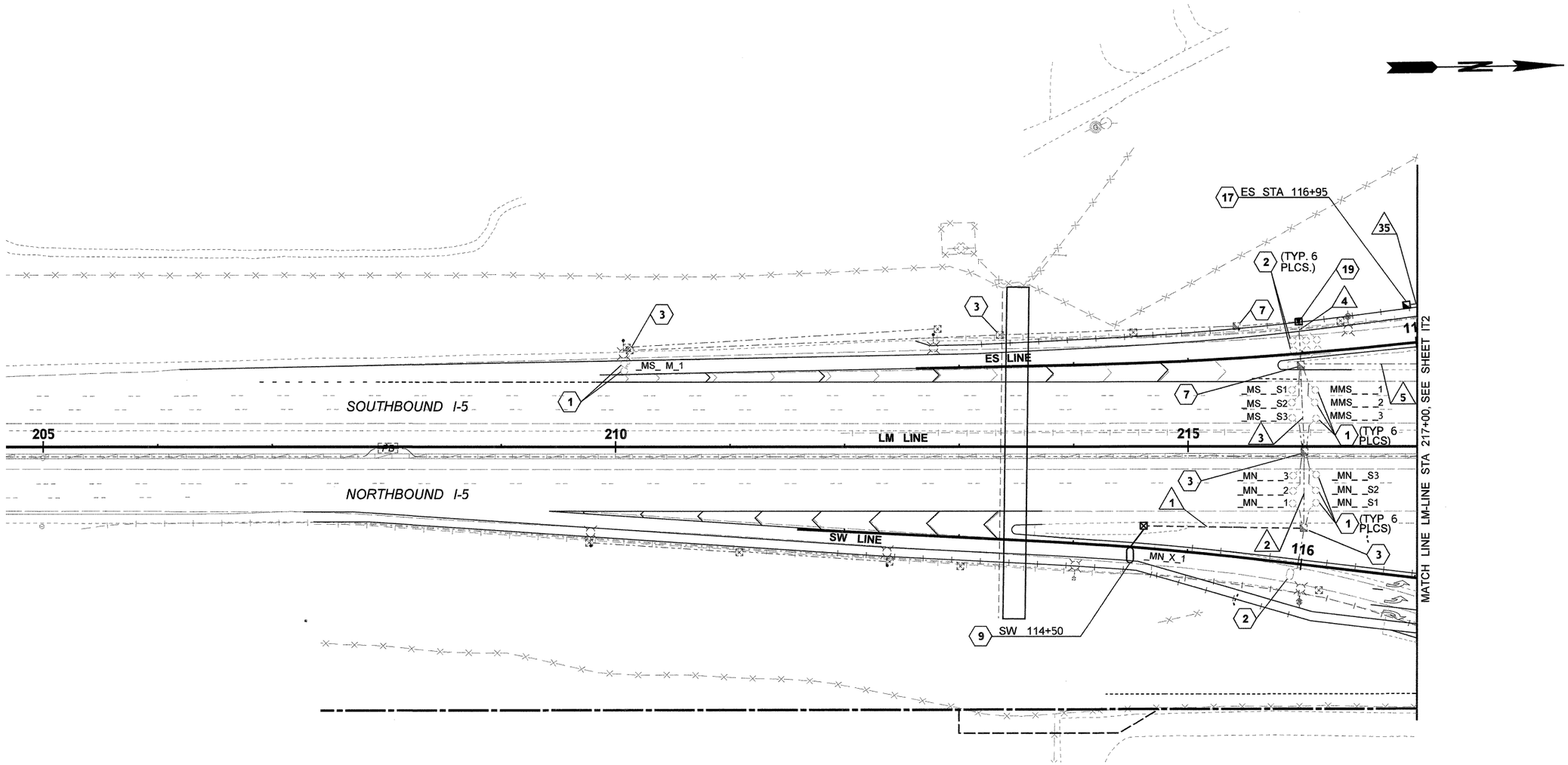

GENERAL NOTES:

1. SEE SHEET IT3 FOR LEGEND AND CONSTRUCTION NOTES.
2. SEE SHEET IT3 FOR ITS WIRE/CONDUIT SCHEDULE AND NOTES.
3. EXCEPT AS SPECIFICALLY NOTED OTHERWISE, THE CONDUIT AND JUNCTION BOX LOCATIONS SHOWN ON THIS PLAN ARE SCHEMATIC AND SHALL BE ADJUSTED, WITH THE ENGINEER'S APPROVAL, AS REQUIRED TO ACCOMODATE EXISTING CONDITIONS AND OTHER NEW ELEMENTS OF THE PROJECT.

0 50 100
SCALE IN FEET

FILE NAME	U:\PSO\Projects\Clients\1598-TulalipTribes\554-1598-095 116th-Ph4-PSE\99Svcs\CADD\DGN\PS&ESheets\BL1598033_PS_ITS.dgn						
TIME	3:07:21 PM				REGION NO. 10	STATE WASH	FED.AID PROJ.NO.
DATE	8/13/2017						
PLOTTED BY	purgabut						
DESIGNED BY	E. SCHOTT				JOB NUMBER		
ENTERED BY	C.D. CLARK						
CHECKED BY	M. YAND				CONTRACT NO.		LOCATION NO.
APPROVED BY	H. LONGFELLOW						
		REVISION	DATE	BY			

P.E. STAMP BOX — DATE

E. CHARLES SCHOTT — STATE OF WASHINGTON — 38542 — REGISTERED PROFESSIONAL ENGINEER — 8.25.17 — DATE — P.E. STAMP BOX

TULALIP TRIBES — Parametrix

I-5 / 116TH STREET NE INTERCHANGE IMPROVEMENTS PHASE 4 RAMPS

ITS PLANS

Plot 1

PLAN REF NO IT1

SHEET 175 OF 238 SHEETS

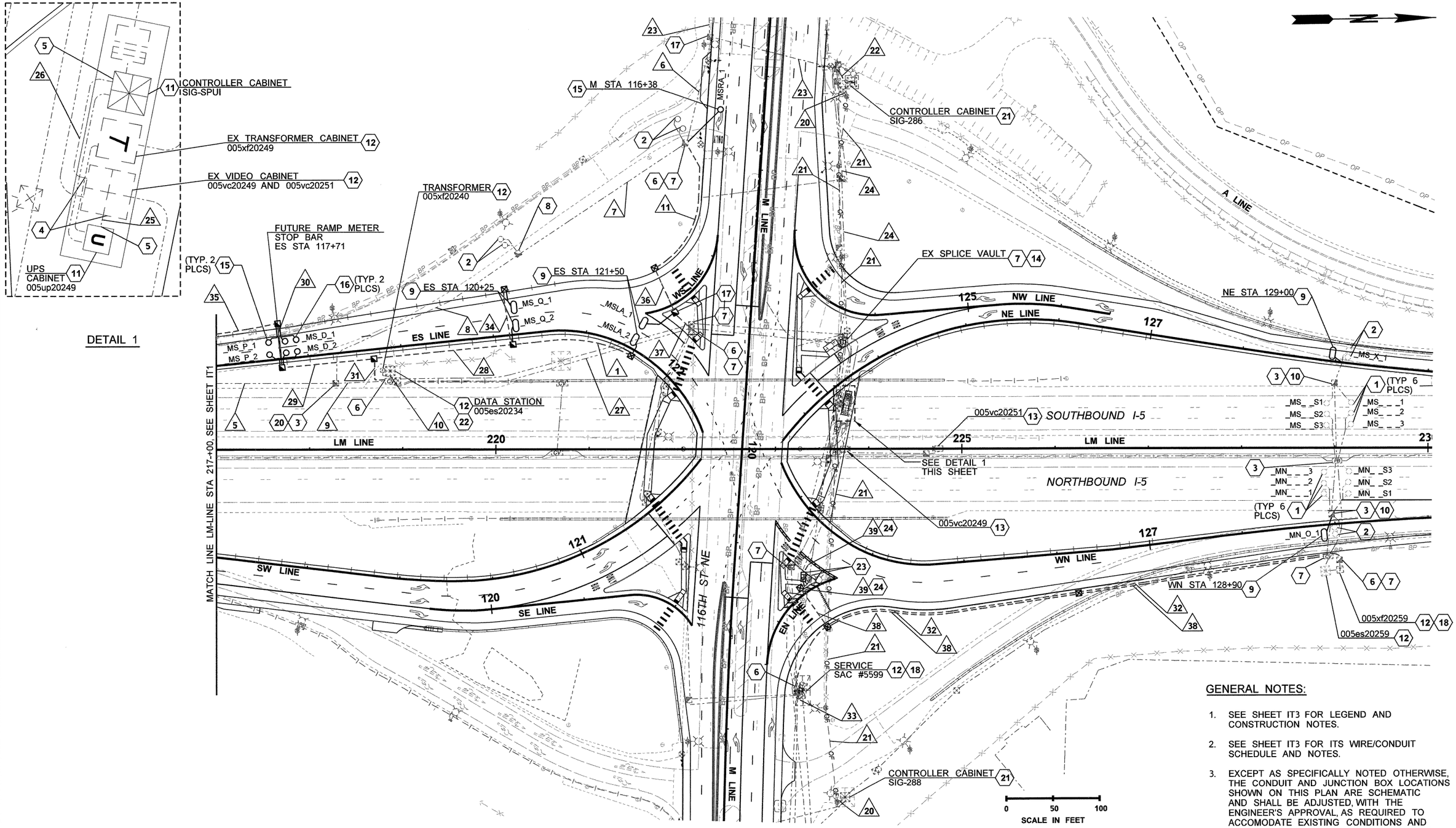

GENERAL NOTES:

1. SEE SHEET IT3 FOR LEGEND AND CONSTRUCTION NOTES.
2. SEE SHEET IT3 FOR ITS WIRE/CONDUIT SCHEDULE AND NOTES.
3. EXCEPT AS SPECIFICALLY NOTED OTHERWISE, THE CONDUIT AND JUNCTION BOX LOCATIONS SHOWN ON THIS PLAN ARE SCHEMATIC AND SHALL BE ADJUSTED, WITH THE ENGINEER'S APPROVAL, AS REQUIRED TO ACCOMODATE EXISTING CONDITIONS AND OTHER NEW ELEMENTS OF THE PROJECT.

FILE NAME	U:\PSO\Projects\Clients\1598-TulalipTribes\554-1598-095 116th-Ph4-PSE\99Svcs\CADD\DGN\PS&ESheets\BL1598033_PS_ITS.dgn
TIME	3:07:36 PM
DATE	8/13/2017
PLOTTED BY	purgabut
DESIGNED BY	E. SCHOTT
ENTERED BY	C.D. CLARK
CHECKED BY	M. YAND
APPROVED BY	H. LONGFELLOW

REVISION	DATE	BY

REGION NO.	STATE	FED.AID PROJ.NO.
10	WASH	
JOB NUMBER		
CONTRACT NO.		LOCATION NO.

P.E. STAMP BOX — DATE

E. CHARLES SCHOTT — STATE OF WASHINGTON — 33242 — REGISTERED PROFESSIONAL ENGINEER — 8-25-17 — DATE — P.E. STAMP BOX

TULALIP TRIBES — Parametrix

I-5 / 116TH STREET NE INTERCHANGE IMPROVEMENTS PHASE 4 RAMPS

ITS PLANS

Plot 2

PLAN REF NO IT2

SHEET 176 OF 238 SHEETS

ITS WIRE/CONDUIT SCHEDULE

RUN NO. △	CONDUIT EXISTING PROTECT	CONDUIT EXISTING ABANDON	CONDUIT PROPOSED NEW	CONDUCTORS EXISTING PROTECT	CONDUCTORS EXISTING REMOVE	PROPOSED CAT6	PROPOSED 2C/S	PROPOSED 3C	PROPOSED 5C	PROPOSED POWER	REMARKS
1			2"				1				
2	2"			2-2C/S, 1-2C/S(1)			1				
	2"										EX. SPARE
3	2"			8-2C/S, 1-2C/S(1)			1				
	2"										EX. SPARE
4	2"			1-2C/S, 2-2C/S(1)	2-5C						EX. MERGE LOOP AND FUTURE RAMP METER SIGNALS
	2"										EX. SPARE
5	3"			12-2C/S, 1-2C/S(1)			1				
	2"			1-2C/S, 4-2C/S(1)	2-5C						
6	2"				1-3C			1			FUTURE RAMP METER BEACON
	2"										EX. SPARE
7	2" (1)			1-2C/S (1)	1-3C						
8	2" (1)			3-2C/S (1)	1-3C						
9	3"			12-2C/S, 1-2C/S(1)	2-5C, 1-3C		1				
	3"			1-2C/S, 7-2C/S(1)							
10	3"			1-2C/S, 7-2C/S(1)			9				
	3"			12-2C/S, 1-2C/S(1)	2-5C, 1-3C		1	2	2		
	2"			1-24SMFO							EX. COMM. TO DATA STATION
	2"							1			EX. SPARE, FUTURE RAMP METER BEACON
11			2"				1	1			ADVANCE QUEUE LOOP, FUTURE RAMP METER BEACON
20	2"			1-6 SMFO(1)							EX. SIG-288 (1)
21	AERIAL(1)			1-6 SMFO(1)							EX. SIG-288 (1)
22	2"			1-6 SMFO(1)							EX. SIG-286/288 (1)
23	2"			1-6 SMFO, 1-24 SMFO							EX. SIG-QCB & WSP INTERCONNECTS
	2"										EX. SPARE
24	2"			1-6 SMFO, 1-24 SMFO, 1-6 SMFO (1)							EX. SIG-QCB & WSP INTERCONNECTS, EX. SIG-286/288 (1)
	2"										EX. SPARE
25	2"					1					COMM. TO UPS CABINET
26	2"					1					COMM. TO SIG-SPUI SIGNAL CABINET
27	2"			1-48 SMFO			2	2			
	2"										EX. SPARE
28			2"				3				
29			2"				4	2			
30			2"				2		2		RAMP METER LOOPS, FUTURE RAMP METER SIGNALS
			2"								SPARE
31			3"				7		2		RAMP METER LOOPS, FUTURE RAMP METER SIGNALS
32			2"							2-#6	NEW CIRCUIT "I" POWER TO EX. DATA STATION TRANSFORMER
33	2"			10-#8, 3-#6	2-#6					2-#6	NEW CIRCUIT "I" POWER TO EX. DATA STATION TRANSFORMER
34			2"				1				
			2"								SPARE
35			2"						2		FUTURE RAMP METER SIGNALS
36			2"				1	1			ADVANCE QUEUE LOOP, FUTURE RAMP METER BEACON
			2"								SPARE
37			2"				2	2			ADVANCE QUEUE LOOP, FUTURE RAMP METER BEACONS
38			2"								SPARE FOR FUTURE RAMP METER
39			2"								INTERCEPT AND EXTEND EX. SPARE TO NEW PULL BOX LOCATION
			2"								INTERCEPT AND EXTEND EX. SPARE TO NEW PULL BOX LOCATION

LEGEND:

SIG-286 = EX. SIGNAL AT 116TH ST NE AND I-5 SB

SIG-288 = EX. SIGNAL AT 116TH ST NE AND I-5 NB

SIG-QCB = EX. SIGNAL AT 116TH ST NE AND QUIL CEDA BLVD

SIG-SPUI = SIGNAL AT 116TH ST NE AND I-5 SPUI

WSP = WASHINGTON STATE PATROL

NOTES:

(1) REMOVE AFTER CUTOVER TO NEW SYSTEM.

ITS LEGEND

EXISTING	PROPOSED	
		TYPE 1, 2 & 5 JUNCTION BOXES
P	PB	PULL BOX
CV		CABLE VAULT
SCV		SMALL CABLE VAULT
		CCTV CAMERA
		CCTV CONTROLLER CABINET
		SIGNAL/ RAMP METER/ DATA STATION CABINET
		SERVICE CABINET
		TRANSFORMER CABINET
	U	UNINTERRUPTIBLE POWER SUPPLY CABINET
		SERVICE GROUND
		CONDUIT
		R1 INDUCTION LOOP
		WR INDUCTION LOOP

CONSTRUCTION NOTES

1. PROTECT EXISTING TRAFFIC LOOP TO REMAIN.
2. PROTECT EXISTING TRAFFIC LOOP DURING CONSTRUCTION. ABANDON LOOP AFTER CUTOVER TO NEW SYSTEM.
3. PROTECT EXISTING JUNCTION BOX / VAULT TO REMAIN.
4. CONNECT NEW CAT 6 CABLE TO EXISTING SWITCH IN EXISTING VIDEO CABINET. SEE VIDEO CABINET TERMINATION DETAILS ON SHEET ITD3.
5. CONNECT NEW CAT 6 CABLE TO NEW SIGNAL CONTROLLER/UPS MODULE. SEE SIGNAL PLAN SG1 FOR CONTROLLER/MODULE AND CABINET INSTALLATION.
6. CONNECT NEW CONDUIT INTO EXISTING JUNCTION BOX / VAULT.
7. ADJUST EXISTING JUNCTION BOX / VAULT TO REMAIN.
8. REMOVE JUNCTION BOX AND ABANDON EXISTING CONDUIT(S) AFTER CUTOVER TO NEW SYSTEM.
9. CONSTRUCT WIDE ROUND (WR) INDUCTION LOOP PER DETAIL ON SHEET ITD2.
10. SPLICE NEW INDUCTION LOOP WIRES TO EXISTING LEAD-IN CABLE(S) IN EXISTING JUNCTION BOX.
11. NEW CABINET TO BE INSTALLED ON EXISTING FOUNDATION AS PART OF SIG-SPUI SIGNAL SYSTEM. SEE SIGNAL PLAN SG1 FOR CABINET INSTALLATION.
12. PROTECT EXISTING CABINET TO REMAIN.
13. PROTECT AND MAINTAIN OPERATION OF EXISTING CCTV CAMERA AND ASSOCIATED ITS INFRASTRUCTURE TO REMAIN.
14. DISCONNECT EXISTING 6 SMFO SIG-286/288 INTERCONNECT FROM PRETERMINATED PATCH PANEL STUB CABLE IN EXISTING CABLE VAULT AFTER CUTOVER TO NEW SIG-SPUI SIGNAL. SEE SPLICE DETAILS ON SHEET ITD3 FOR CONFIGURATION OF EXISTING SPLICES.
15. CONSTRUCT ROUND PASSAGE / ADVANCE LOOP (R1) PER DETAIL ON ITD2.
16. CONSTRUCT ROUND DEMAND/SAMPLING LOOPS (R2) PER DETAIL ON ITD2.
17. COIL 25 FEET OF 3C/5C CABLE IN JUNCTION BOX.
18. TERMINATE NEW POWER CABLES IN EXISTING TRANSFORMER/SERVICE CABINET.
19. REMOVE EXISTING JUNCTION BOX AND REPLACE WITH TYPE 5 JUNCTION BOX. ADJUST TO FINISHED GRADE.
20. REMOVE CONDUIT ELBOW(S) OF CONDUIT(S) TO BE ABANDONED. SEE WIRE NOTES.
21. EXISTING CABINET AND FOUNDATION TO BE REMOVED AS PART OF SIG-SPUI SIGNAL SYSTEM WORK AFTER CUTOVER TO NEW SIGNAL SYSTEM. SEE SIGNAL PLAN SHEET SG2.
22. TERMINATE NEW LOOP WIRES IN EXISTING CABINET IN ACCORDANCE WITH THE LOOP TERMINATION SCHEDULE.
23. RELOCATE EXISTING PULL BOX TO AVOID CONFLICT WITH PROPOSED BUS PAD.
24. INTERCEPT AND EXTEND EXISTING SPARE CONDUITS TO REVISED PULL BOX LOCATION. MATCH EXISTING CONDUIT TYPE AND SIZE.

FILE NAME	U:\PSO\Projects\Clients\1598-TulalipTribes\554-1598-095 116th-Ph4-PSE\99Svcs\CADD\DGN\PS&ESheets\BL1598033_PS_ITS.dgn
TIME	3:08:27 PM
DATE	8/13/2017
PLOTTED BY	purgabut
DESIGNED BY	E. SCHOTT
ENTERED BY	C.D. CLARK
CHECKED BY	M. YAND
APPROVED BY	H. LONGFELLOW

REVISION | DATE | BY

REGION NO. 10 | STATE WASH | FED.AID PROJ.NO.

JOB NUMBER

CONTRACT NO. | LOCATION NO.

DATE — P.E. STAMP BOX

E. CHARLES SCHOTT, STATE OF WASHINGTON, 33242, REGISTERED PROFESSIONAL ENGINEER — 8-25-17 DATE — P.E. STAMP BOX

TULALIP TRIBES — Parametrix

I-5 / 116TH STREET NE
INTERCHANGE IMPROVEMENTS
PHASE 4 RAMPS

ITS PLANS

Plot 3

PLAN REF NO IT3

SHEET 177 OF 238 SHEETS

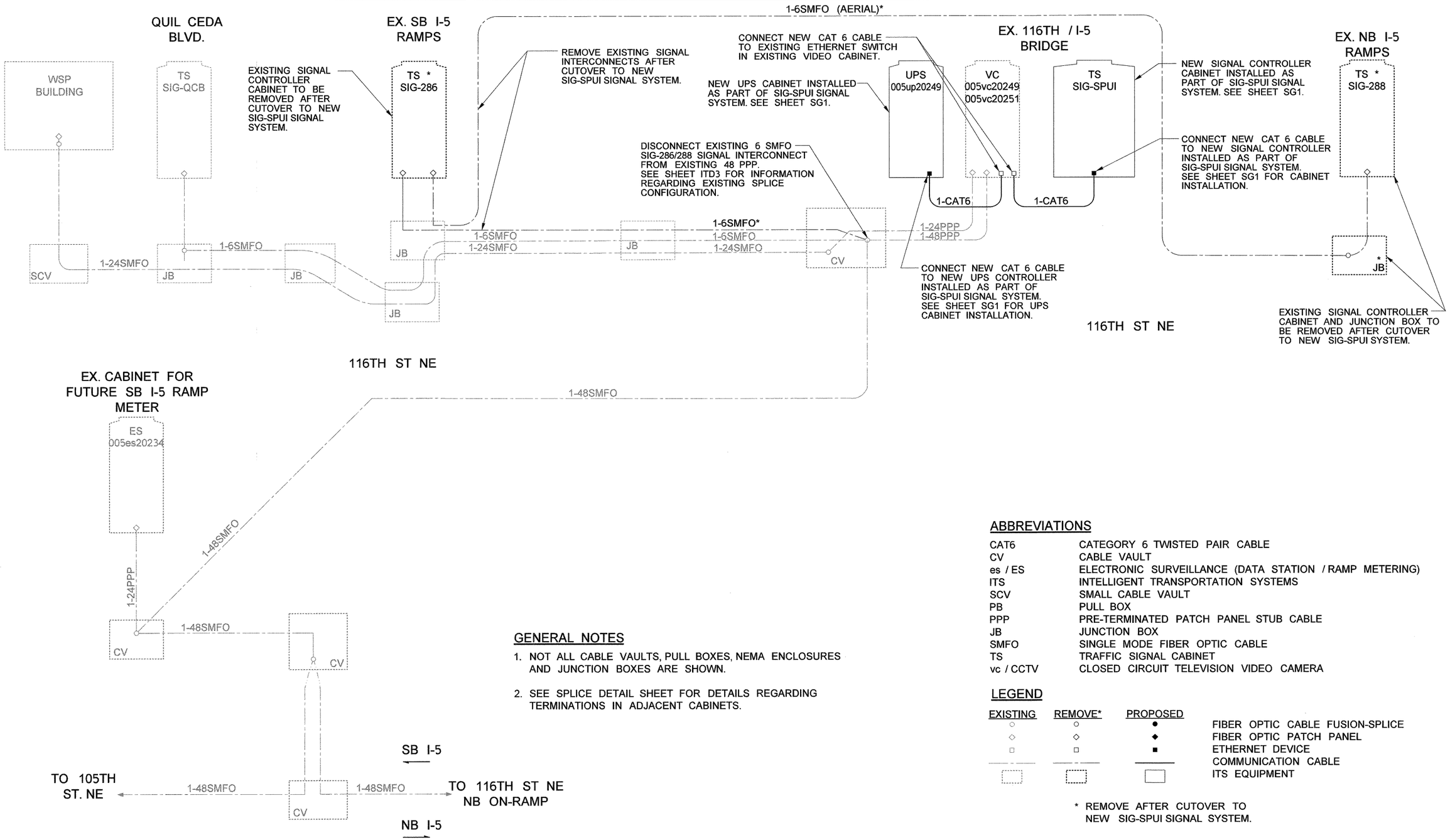

ITS DISTRIBUTION DIAGRAM

GENERAL NOTES

1. NOT ALL CABLE VAULTS, PULL BOXES, NEMA ENCLOSURES AND JUNCTION BOXES ARE SHOWN.
2. SEE SPLICE DETAIL SHEET FOR DETAILS REGARDING TERMINATIONS IN ADJACENT CABINETS.

ABBREVIATIONS

CAT6	CATEGORY 6 TWISTED PAIR CABLE
CV	CABLE VAULT
es / ES	ELECTRONIC SURVEILLANCE (DATA STATION / RAMP METERING)
ITS	INTELLIGENT TRANSPORTATION SYSTEMS
SCV	SMALL CABLE VAULT
PB	PULL BOX
PPP	PRE-TERMINATED PATCH PANEL STUB CABLE
JB	JUNCTION BOX
SMFO	SINGLE MODE FIBER OPTIC CABLE
TS	TRAFFIC SIGNAL CABINET
vc / CCTV	CLOSED CIRCUIT TELEVISION VIDEO CAMERA

LEGEND

EXISTING	REMOVE*	PROPOSED	
○	○	●	FIBER OPTIC CABLE FUSION-SPLICE
◇	◇	◆	FIBER OPTIC PATCH PANEL
□	□	■	ETHERNET DEVICE
			COMMUNICATION CABLE
			ITS EQUIPMENT

* REMOVE AFTER CUTOVER TO NEW SIG-SPUI SIGNAL SYSTEM.

FILE NAME	U:\PSO\Projects\Clients\1598-TulalipTribes\554-1598-095 116th-Ph4-PSE\99Svcs\CADD\DGN\PS&ESheets\BL1598033_PS_ITD.dgn					
TIME	3:01:08 PM				REGION NO. 10	STATE WASH	FED.AID PROJ.NO.
DATE	8/13/2017					
PLOTTED BY	purgabut				JOB NUMBER	
DESIGNED BY	E. SCHOTT					
ENTERED BY	C.D. CLARK					
CHECKED BY	M. YAND				CONTRACT NO.	LOCATION NO.
APPROVED BY	H. LONGFELLOW					
		REVISION	DATE	BY		

DATE
P.E. STAMP BOX

E. CHARLES SCHOTT — STATE OF WASHINGTON — 33242 — REGISTERED PROFESSIONAL ENGINEER
8-25-17
DATE
P.E. STAMP BOX

TULALIP TRIBES
Parametrix

I-5 / 116TH STREET NE INTERCHANGE IMPROVEMENTS PHASE 4 RAMPS

ITS DETAILS

Plot 1
PLAN REF NO ITD1
SHEET 178 OF 238 SHEETS

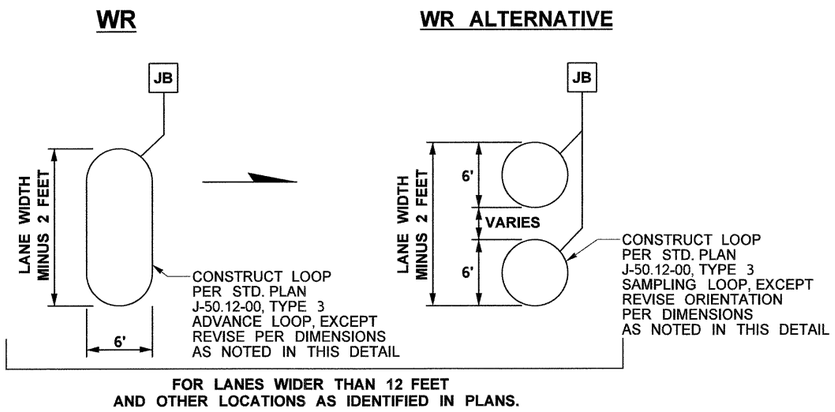

WR LOOP DETAIL

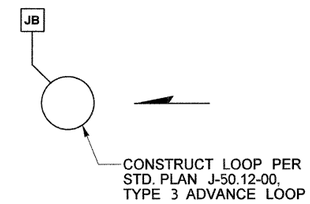

R1 LOOP DETAIL

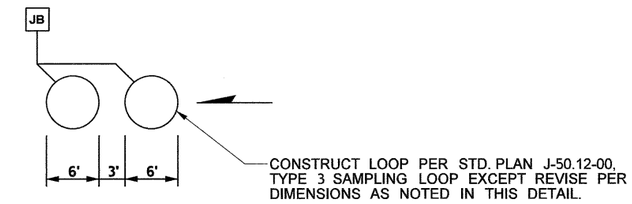

R2 LOOP DETAIL

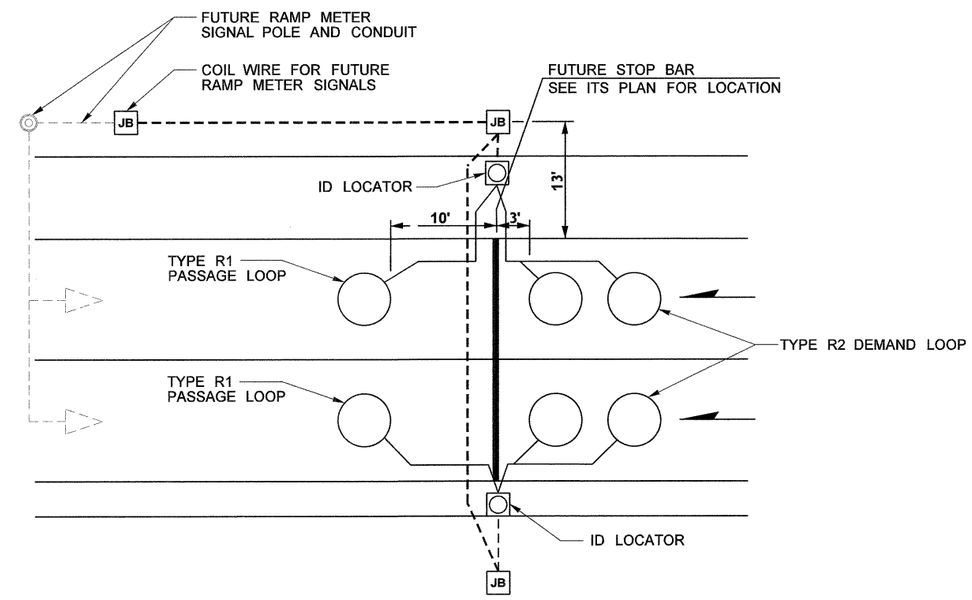

GENERAL NOTES:

1. CENTER INDUCTION LOOPS BETWEEN LANE LINES.
2. LOOP "ID LOCATOR" SHALL BE INSTALLED ON THE TOP OF EACH STUB-OUT CONDUIT.
3. JUNCTION BOXES SHALL BE SIZED AS SHOWN IN THE ITS PLAN SHEETS.

TYPE 2 SIGNAL - TWO LANE RAMP METER LOOP LAYOUT DETAIL

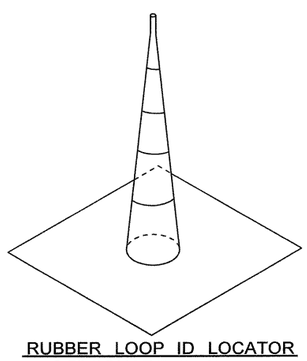

RUBBER LOOP ID LOCATOR
3.5" SQUARE X 4" TALL
GRAY COLOR

FILE NAME	U:\PSO\Projects\Clients\1598-TulalipTribes\554-1598-095 116th-Ph4-PSE\99Svcs\CADD\DGN\PS&ESheets\BL1598033_PS_ITD.dgn						
TIME	3:01:20 PM				REGION NO.	STATE	FED.AID PROJ.NO.
DATE	8/13/2017				10	WASH	
PLOTTED BY	purgabut				JOB NUMBER		
DESIGNED BY	E. SCHOTT						
ENTERED BY	C.D. CLARK						
CHECKED BY	M. YAND				CONTRACT NO.		LOCATION NO.
APPROVED BY	H. LONGFELLOW						
		REVISION	DATE	BY			

P.E. STAMP BOX — DATE

E. CHARLES SCHOTT, STATE OF WASHINGTON, 33242, REGISTERED PROFESSIONAL ENGINEER — 8.25.17 DATE — P.E. STAMP BOX

TULALIP TRIBES — Parametrix

I-5 / 116TH STREET NE INTERCHANGE IMPROVEMENTS PHASE 4 RAMPS

ITS DETAILS

Plot 2

PLAN REF NO: ITD2

SHEET 179 OF 238 SHEETS

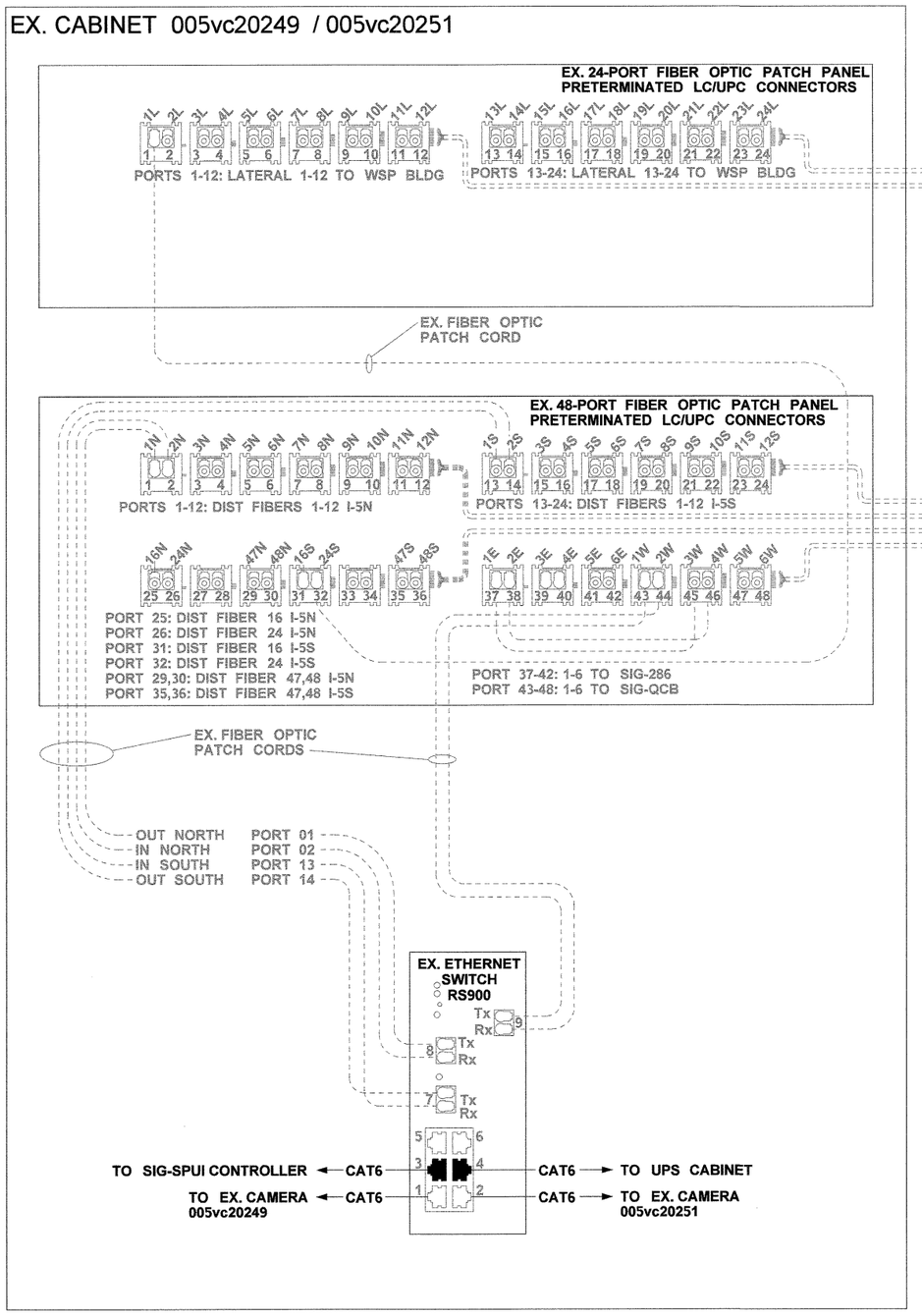

VIDEO CABINET TERMINATIONS DETAILS

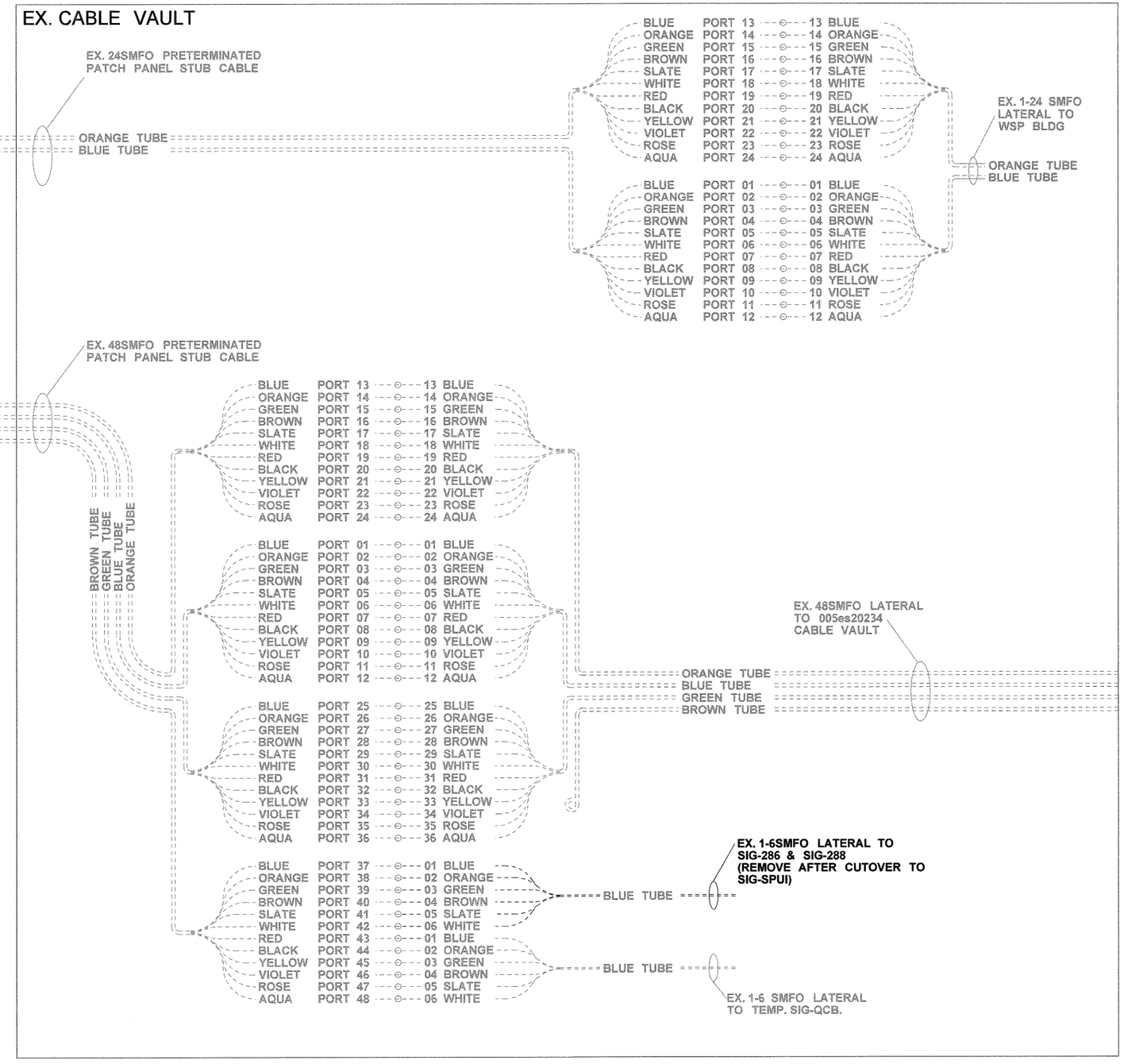

EX. SPLICE DETAILS

FILE NAME	U:\PSO\Projects\Clients\1598-TulalipTribes\554-1598-095 116th-Ph4-PSE\99Svcs\CADD\DGN\PS&ESheets\BL1598033_PS_ITD.dgn						
TIME	3:01:32 PM				REGION NO.	STATE	FED.AID PROJ.NO.
DATE	8/13/2017				10	WASH	
PLOTTED BY	purgabut				JOB NUMBER		
DESIGNED BY	E. SCHOTT						
ENTERED BY	C.D. CLARK						
CHECKED BY	M. YAND				CONTRACT NO.		LOCATION NO.
APPROVED BY	H. LONGFELLOW						
		REVISION	DATE	BY			

P.E. STAMP BOX — DATE

E. CHARLES SCHOTT — STATE OF WASHINGTON — 38248 — REGISTERED PROFESSIONAL ENGINEER — 8-25-17 — DATE — P.E. STAMP BOX

TULALIP TRIBES — Parametrix

I-5 / 116TH STREET NE
INTERCHANGE IMPROVEMENTS
PHASE 4 RAMPS

ITS DETAILS

Plot 3

PLAN REF NO ITD3

SHEET 180 OF 238 SHEETS

SIGN RELOCATION SPECIFICATIONS

SIGN NO.	SIGN CODE	SIGN DESCRIPTION	EXIST. STA. LOC. (or MP)	NEW STA. LOC. (or MP)	SIGN SIZE X	SIGN SIZE Y	POST MATERIAL	POST SIZE	POST LENGTH H1	POST LENGTH H2	POST LENGTH H3	POST LENGTH H4	CLEARANCE V	CLEARANCE W	REMARKS
8	W3-3	SIGNAL AHEAD (SYMBOL)	SW 116+74 RT	SW 117+02 RT	48"	48"	STEEL	2.5" SQ.	14.9'				7'	10.5'	On new steel post, support Type ST-4. Sign date: 7/2011
10	LG-R1	"FOOD" (RAMPS)	SW 119+24 RT	SW 113+14 RT	96"	72"	STEEL	2.5" SQ. 2.25" Ins	17.0'	17.1'			7'	15.5'	On new steel post, support Type SB-3. MIS sign, dated 6/2010
11	LG-R1	"GAS, FOOD" (RAMPS)	SE 120+13 RT	LM 210+09 RT	72"	96"	STEEL	2.5" SQ. 2.25" Ins	19.0'	18.9'			7'	15.5'	On new steel post, support Type SB-3. MIS sign, dated 12/2014
12	Special	"ADOPT A HIGHWAY (ALASKA)"	SW 112+83 RT	SW 112+39 RT	36"	36"	LUM POLE						7'	16'	Mount to existing luminaire pole. Sign date: 12/2015
13	Special	"ADOPT A HIGHWAY (ALASKA)"	NE 130+30 LT	LM 234+05 LT	30"	36"	LUM POLE						7'	19'	Mount to luminaire pole C1. Sign date: 12/2016
15	R3-7R	"RIGHT LANE MUST TURN RIGHT"	M 115+20 RT	M 115+25 RT	30"	30"	SIGN BRIDGE						7'	17.5'	Attached to pier of sign bridge. Sign date: 5/2008
16	R5-1	"DO NOT ENTER"	M 123+24 RT	SW 122+05 LT	48"	48"									Below sign 55 on same post, Sign facing northwest. Sign date: 2011
26	LG-R1	GAS, FOOD (RAMPS)	NW 124+68 LT	NE 131+61 LT	72"	84"	STEEL	2.5" SQ. 2.25" Ins	18.1'	18.7'			7'	15.5'	On new steel post, support Type SB-3. MIS sign, dated 6/2010
32	LG-R1	FOOD (RAMPS)	NW 125+85 LT	NE 128+47 LT	96"	72"	STEEL	3" SQ.	18.5'	19.6'			7'	15.5'	On new steel post, support Type SB-3.
45	W4-1R	"MERGING FROM RIGHT" (SYMBOL)	WN 125+88 LT	WN 129+00 LT	48"	48"	STEEL	2.5" SQ.	14.5'				7'	10.0'	On new steel post, support Type ST-4. Sign date: 5/2014

CONSTRUCTION NOTES:

POST LENGTHS SHOWN ARE APPROXIMATE. FINAL VALUES SHALL BE DETERMINED IN THE FIELD PRIOR TO FABRICATION.
FOR STRUCTURE AND MOUNTING DETAILS SEE STANDARD PLAN SHEET SERIES "G".
FOR CODE REFERENCES AND STANDARD DETAILS SEE WASHINGTON STATE SIGN FABRICATION MANUAL.

DESIGNED BY	J. JUN				
ENTERED BY	C. SHARMA				
CHECKED BY	D. PROCTOR				
PROJ. ENGR.	H. LONGFELLOW				
REGION ADM.					
			REVISION	DATE	BY

REGION NO.	STATE	FED. AID PROJ. NO.
10	WASH	
JOB NUMBER		
CONTRACT NO.		

TULALIP TRIBES
Parametrix

I-5 / 116TH STREET NE
INTERCHANGE IMPROVEMENTS
PHASE 4 RAMPS

SIGN RELOCATION SPECIFICATIONS

REL1

SHEET 181 OF 238 SHEETS

SIGN INSTALLATION SPECIFICATIONS

SIGN NO.	SIGN CODE	SIGN DESCRIPTION	STA. LOC. (or MP)	SIGN SIZE X	SIGN SIZE Y	NG TYPE	LETTER SIZE OR CODE	POST MATERIAL	POST SIZE	POST LENGTH H1	POST LENGTH H2	POST LENGTH H3	POST LENGTH H4	CLEARANCE V	CLEARANCE W	REMARKS
1	E5-1A (MOD)	EXIT GORE SIGN "EXIT 202"	SW 113+50 LT	78"	96"	III or IV	CODE B	STEEL	2.5" SQ. 2.25" Ins	18.1'	18.1'			7'	7.0'	Support Type SB-3
3	R10-19 (MOD)	BUS SIGNAL	NE 123+29 LT	24"	18"	III or IV	STANDARD	SIGNAL POLE						8.5'	4'	On signal pole 4
4	Special	"STATE PATROL"	SW 114+62 RT	54"	60"	III or IV	STANDARD	STEEL	2.5" SQ. 2.25" Ins	15.5'				7'	15.5'	Support Type SB-3
5	R5-1001	"PEDS. HITCH. PROHIBITED"	ES 121+70 RT	18"	18"	III or IV	STANDARD							7'	10.5'	Below sign 120 on same post
6	Special	"NAVY SUPPORT COMPLEX"	SW 111+62 RT	66"	66"	III or IV	STANDARD	STEEL	3" SQ.	16.8'				7'	17'	Support Type SB-3
7	R9-3A	NO PED. CROSSING SYMBOL	M 118+57 RT	18"	18"	III or IV	STANDARD	STEEL	2.5" SQ.	8.5'				7'	18.0'	Support Type ST-4
9	R10-19 (MOD)	BUS SIGNAL	SW 121+89 RT	24"	18"	III or IV	STANDARD	SIGNAL POLE						8.5'	4'	On signal pole 8
14	R1-2	"YIELD"	SE 121+73 RT	36"	36"	III or IV	STANDARD	STEEL	4" DIA	11'				7'	13.0'	Mount to Elbow Bracket on SEW Traffic Barrier on Wall W3, see detail on sheet SN6
17	R3-7R	"RIGHT LANE MUST TURN RIGHT"	M 124+59 LT	30"	30"	III or IV	STANDARD	SIGN BR						7'	17.5'	Mounted on pier of sign bridge
20	R5-1	"DO NOT ENTER"	SW 121+70 RT	48"	48"	III or IV	STANDARD									Below sign 58 on same post
21	NOT USED															
25	R5-1	"DO NOT ENTER"	NE 123+50 LT	48"	48"	III or IV	STANDARD									Below sign 59 on same post
29	R5-1	"DO NOT ENTER"	NE 123+14 RT	48"	48"	III or IV	STANDARD									Below sign 62 on same post
30	NOT USED															
40	R1-2	"YIELD"	EN 123+74 RT	36"	36"	III or IV	STANDARD	LIGHT POLE						7'	17.3'	On luminaire pole D5
42	W4-2L	DROP LANE	WN 125+54 RT	36"	36"	III or IV	STANDARD	LIGHT POLE						7'	16.5'	On luminaire pole D3
43	R3-8A (MOD)	LANE ASSIGNMENT ARROWS	SW 116+03 RT	48"	30"	III or IV	STANDARD	STEEL	2.5" SQ.	13.3'				7'	13.0'	Support Type ST-4
44	R5-1001	"PEDS. HITCH. PROHIBITED"	EN 123+47 LT	18"	18"	III or IV	STANDARD									Below sign 135 on same post
46	Special	"NO PARKING TOW AWAY ZONE"	WN 130+93 RT	24"	60"	III or IV	STANDARD	LIGHT POLE						7'	18.5'	Mounted on luminair pole
50	W4-2L	DROP LANE	ES 117+68 LT	36"	36"	III or IV	STANDARD	STEEL	2.5" SQ.	14.9'				7'	13.0'	Support Type ST-4
51	E6-101 (MOD)	"EXIT 202", "116TH ST NE"	LM 206+80 RT	228"	90"	III or IV	CODE E	STEEL	W6x12	23.0'	23.8'			7'	34.0'	W-beam, 2 posts
52	R9-3A	NO PED. CROSSING SYMBOL	M 121+30 RT	18"	18"	III or IV	STANDARD	SIGNAL POLE						6.5'	27.0'	On signal pole 9
53	R9-3A	NO PED. CROSSING SYMBOL	M 118+80 LT	18"	18"	III or IV	STANDARD	LIGHT POLE						7'	19.0'	On luminaire pole C4
54	R9-3A	NO PED. CROSSING SYMBOL	M 121+17 LT	18"	18"	III or IV	STANDARD	STEEL	2.5" SQ.	11.5'				7'	8.5'	Support Type ST-4
55	R6-1R	"ONE WAY" (RIGHT)"	SW 122+05 LT	54"	18"	III or IV	STANDARD	STEEL	2.5" SQ.	12.5'				7'	11.5	Support Type AS with breakaway feature, Sign facing northeast. Above sign 16 on same post.
57	R5-1001	"PEDS. HITCH. PROHIBITED"	M 117+00 RT	18"	18"	III or IV	STANDARD									Above sign 137 on same post.
58	R6-1L	"ONE WAY" (LEFT)	SW 121+70 RT	54"	18"	III or IV	STANDARD	STEEL	2.5" SQ	12.5'				7'	16.7'	Support Type AS with breakaway feature, Sign facing southeast
59	R6-1L	"ONE WAY" (LEFT)	NE 123+50 LT	54"	18"	III or IV	STANDARD	STEEL	2.5" SQ	12.5'				7'	16.7'	Support Type AS with breakaway feature, Sign facing northeast
60	R1-2	"YIELD"	WS 121+93 LT	36"	36"	III or IV	STANDARD	STEEL	2.5" SQ.	15.5'				7'	15.5'	Support Type ST-4
62	R6-1R	"ONE WAY" (RIGHT)"	NE 123+14 RT	54"	18"	III or IV	STANDARD	STEEL	2.5" SQ.	12.5'				7'	12.0'	Support Type AS with breakaway feature, Sign facing southwest
67	Special	"STATE PATROL"	NW 126+01 LT	54"	60"	III or IV	STANDARD	STEEL	2.5" SQ. 2.25" Ins	16.9'				7'	16.5'	Support Type SB-3
75	Special	"NAVY SUPPORT COMPLEX"	NE 130+08 LT	66"	66"	III or IV	STANDARD	STEEL	3" SQ.	16.9'				7'	17'	Support Type SB-3.
77	E5-1A (MOD)	EXIT GORE SIGN, "EXIT 202"	NE 130+20 RT	78"	96"	III or IV	CODE B	STEEL	2.5" SQ. 2.25" Ins	18.1'	18.0'			7'	7.0'	Support Type SB-3
78	E6-101(MOD)	"EXIT 202", "116TH ST NE"	LM 238+20 LT	228"	90"	III or IV	CODE E	STEEL	W6x12	23.7'	24.5'			7'	34.0'	W-beam, 2 posts
97	W4-3R	ADDED LANE SYMBOL RIGHT	M 118+80 LT	36"	36"	III or IV	STANDARD	LIGHT POLE						7'	19.0'	On luminaire pole C4

CONSTRUCTION NOTES:

POST LENGTHS SHOWN ARE APPROXIMATE. FINAL VALUES SHALL BE DETERMINED IN THE FIELD PRIOR TO FABRICATION.
FOR STRUCTURE AND MOUNTING DETAILS SEE STANDARD PLAN SHEET SERIES "G".
FOR CODE REFERENCES AND STANDARD DETAILS SEE WASHINGTON STATE SIGN FABRICATION MANUAL.

DESIGNED BY	J. JUN
ENTERED BY	C. SHARMA
CHECKED BY	D. PROCTOR
PROJ. ENGR.	H. LONGFELLOW
REGION ADM.	

REVISION | DATE | BY

REGION NO.	STATE	FED. AID PROJ. NO.
10	WASH	

JOB NUMBER

CONTRACT NO.

TULALIP TRIBES Parametrix

I-5 / 116TH STREET NE
INTERCHANGE IMPROVEMENTS
PHASE 4 RAMPS

SIGN INSTALLATION SPECIFICATIONS

INS1

SHEET 182 OF 238 SHEETS

SIGN INSTALLATION SPECIFICATIONS

SIGN NO.	SIGN CODE	SIGN DESCRIPTION	STA. LOC. (or MP)	SIGN SIZE X	SIGN SIZE Y	NG TYPE	LETTER SIZE OR CODE	POST MATERIAL	POST SIZE	POST LENGTH H1	POST LENGTH H2	POST LENGTH H3	POST LENGTH H4	CLEARANCE V	CLEARANCE W	REMARKS
98	D1-501 (MOD)	"I-5 NORTH" "VANCOUVER B.C." "LEFT LANES"	M 115+25 RT	192"	114"	See Remark	CODE C	SIGN BR	OVERHEAD							Mount on Sign Bridge No.1 Sheeting type IV for background Sheeting type XI for legend and border
99	D1-701 (MOD)	"I-5 SOUTH" "SEATTLE"	M 115+25 RT	132"	114"	See Remark	CODE C	SIGN BR	OVERHEAD							Mount on Sign Bridge No.1 Sheeting type IV for green background, XI for white legend and border
100	W3-3	SIGNAL AHEAD (SYMBOL)	NE 127+00 LT	48"	48"	III or IV	STANDARD	STEEL	2.5" SQ.	15.6'				7'	16'	Support Type SB-3
112	M8-101	"NORTH", I-5 SHIELD, LT ARROW	M 120+00 RT	36"	60"	See Remark	CODE C	SIGN BR	OVERHEAD							Mount on Sign Bridge No.2 Sheeting type IV for background Sheeting type XI for legend and border
113	M8-101	"SOUTH", I-5 SHIELD, LT ARROW	M 120+00 LT	36"	60"	See Remark	CODE C	SIGN BR	OVERHEAD							Mount on Sign Bridge No.2 Sheeting type IV for background Sheeting type XI for legend and border
115	D13-3	"FREEWAY ENTRANCE"	M 122+34 LT	48"	30"	III or IV	STANDARD	STEEL	2.5" SQ.	14.6'				7'	16.0'	Support Type ST-4
116	D1-501 (MOD)	"I-5 SOUTH" "SEATTLE" "LEFT LANES"	M 124+59 LT	144"	114"	See Remark	CODE C	SIGN BR	OVERHEAD							Mount on Sign Bridge No.3 Sheeting type IV for background Sheeting type XI for legend and border
117	D1-701 (MOD)	"I-5 NORTH" "VANCOUVER B.C."	M 124+59 LT	186"	114"	See Remark	CODE C	SIGN BR	OVERHEAD							Mount on Sign Bridge No.3 Sheeting type IV for background Sheeting type XI for legend and border
118	D13-3	"FREEWAY ENTRANCE"	WN 123+52 LT	48"	30"	III or IV	STANDARD	STEEL	2.5" SQ.	14.3'				7'	11'	Support Type ST-4
120	D13-3	"FREEWAY ENTRANCE"	ES 121+70 RT	48"	30"	III or IV	STANDARD	STEEL	2.5" SQ. 2.25" Ins	15.8'				7'	10.5'	Support Type ST-4
135	D13-3	"FREEWAY ENTRANCE"	EN 123+47 LT	48"	30"	III or IV	STANDARD	STEEL	2.5" SQ.	14'				7'	16.5	Support Type ST-4
136	D13-3	"FREEWAY ENTRANCE"	ES 122+00 LT	48"	30"	III or IV	STANDARD	STEEL	2.5" SQ.	9.5'				7'	13.5	Support Type AS with breakaway feature
137	D13-3	"FREEWAY ENTRANCE"	M 117+00 RT	48"	30"	III or IV	STANDARD	STEEL	2.5" SQ.	14.9'				7'	16.0'	Support Type ST-4
138	R5-1001	"PEDS. HITCH. PROHIBITED"	M 122+34 LT	18"	18"	III or IV	STANDARD									Below sign 115 on same post
156	W4-1R	"MERGING FROM RIGHT" (SYMBOL)	ES 115+82 RT	48"	48"	III or IV	STANDARD	STEEL	2.5" SQ.	14.8'				7'	9.0'	Support Type ST-4
157	R5-1	"DO NOT ENTER"	SE 121+73 RT	48"	48"	III or IV	STANDARD									On same post as sign 14
158	R6-1L	"ONE WAY" (LEFT)	SE 121+80 RT	54"	18"	III or IV	STANDARD							7'	9.1'	On luminaire pole A3.
159	R5-1	"DO NOT ENTER"	SE 121+78 LT	48"	48"	III or IV	STANDARD	STEEL	2.5" SQ.	15.5'				7'	8.5'	Support Type ST-4
160	R6-1R	"ONE WAY" (RIGHT)	SE 121+78 LT	54"	18"	III or IV	STANDARD									Above sign 159 on same post
161	R5-1	"DO NOT ENTER"	NW 123+38 RT	48"	48"	III or IV	STANDARD	STEEL	2.5" SQ.	15.5'				7'	8.5'	Support Type ST-4
162	R6-1L	"ONE WAY" (LEFT)	NW 123+38 RT	54"	18"	III or IV	STANDARD									Above sign 161 on same post
163	R5-1	"DO NOT ENTER"	NW 123+47 LT	48"	48"	III or IV	STANDARD									On back of sign 165 on same post.
164	R6-1R	"ONE WAY" (RIGHT)	NW 123+47 LT	54"	18"	III or IV	STANDARD									Above sign 163 on same post
165	R1-2	YIELD	NW 123+47 LT	36"	36"	III or IV	STANDARD	STEEL	2.5" SQ. 2.25" Ins	15.7'				7'	12'	Support Type ST-4

CONSTRUCTION NOTES:

POST LENGTHS SHOWN ARE APPROXIMATE. FINAL VALUES SHALL BE DETERMINED IN THE FIELD PRIOR TO FABRICATION.
FOR STRUCTURE AND MOUNTING DETAILS SEE STANDARD PLAN SHEET SERIES "G".
FOR CODE REFERENCES AND STANDARD DETAILS SEE WASHINGTON STATE SIGN FABRICATION MANUAL.

						REGION NO.	STATE	FED. AID PROJ. NO.
DESIGNED BY	J. JUN					10	WASH	
ENTERED BY	C. SHARMA							
CHECKED BY	D. PROCTOR					JOB NUMBER		
PROJ. ENGR.	H. LONGFELLOW							
REGION ADM.						CONTRACT NO.		
			REVISION	DATE	BY			

TULALIP TRIBES
Parametrix

I-5 / 116TH STREET NE
INTERCHANGE IMPROVEMENTS
PHASE 4 RAMPS

SIGN INSTALLATION SPECIFICATIONS

INS2

SHEET 183 OF 238 SHEETS

SIGN REMOVAL SPECIFICATIONS

SIGN NO.	SIGN CODE	SIGN DESCRIPTION	STA. LOC. (or MP)	SIGN SIZE X	SIGN SIZE Y	POST MATERIAL	POST SIZE	# OF POSTS	REMARKS
R-18	R6-1L	"ONE WAY" (LEFT)	M 123+24 RT	54"	18"	STEEL	2.5" SQ.	1	
R-19	SPECIAL	"NO LOITERING"	M 123+24 RT	18"	12"				Sign currently is on same post as Sign R-18
R-27	R6-1L	"ONE WAY" (LEFT)	M 116+84 LT	54"	18"	STEEL	2.5" SQ.	1	
R-28	R6-1R	"ONE WAY" (RIGHT)	M 116+84 LT	54"	18"				Sign currently is on same post as Sign R-27
R-31	D1-801 (MOD)	"I-5 SOUTH" "SEATTLE", STRAIGHT ARROW	M125+00 LT	96"	120"	I-beam	4"x6"	2	I-beam
		"I-5 NORTH" "VANCOUVER, B.C.," RIGHT ARROW							
R-33	E12-201	"FREEWAY ENTRANCE"	M 123+97 LT	36"	24"	STEEL	2.5" SQ.	1	
R-34	SPECIAL	"BUS STOP"	M 122+99 LT	18"	26"	STEEL	2.0" SQ	1	Community Transit sign
R-36	R9-3A (MOD)	NO PED. CROSSING SYMBOL	M 123+05 LT	18"	18"	STEEL	2.5" SQ.	1	
R-37	R9-3BR (MOD)	"USE CROSSWALK"	M 123+05 LT	18"	12"				Same post as Sign R-36
R-38	D4-301 (MOD)	"PARK AND RIDE"	M 122+40 LT	18"	24"	STEEL	2.5" SQ	1	
R-39	E12-201	"FREEWAY ENTRANCE"	M 123+09 LT	36"	24"	STEEL	2.5" SQ.	1	
R-49	W4-1R	"MERGING FROM RIGHT" (SYMBOL)	ES 116+85 RT	30"	30"	STEEL	2.5" SQ.	1	
R-61	E12-201	"FREEWAY ENTRANCE"	M 116+82 RT	36"	24"	WOOD	4"x4"	1	
R-63	E12-201	"FREEWAY ENTRANCE"	M 116+14 RT	36"	24"	STEEL	2.5" SQ.	1	
R-64	R9-4A	"NO HITCHHIKING" (SYMBOL)	M 116+53 RT	18"	18"	WOOD	4"x4"	1	
R-65	Special	"STATE PATROL"	SW 119+38 RT	36"	30"	STEEL	2.5" SQ.	1	
R-66	R5-1	"DO NOT ENTER"	M 116+20 LT	48"	48"	STEEL	2.5" SQ.	1	
R-68	D1-801 (MOD)	"I-5 SOUTH" "SEATTLE", RIGHT ARROW	M 113+80 RT	168"	120"	I-beam	4"x6"	2	
		I-5 NORTH VANCOUVER, B.C., STRAIGHT ARROW							
R-76	W3-3	SIGNAL AHEAD (SYMBOL)	NE 127+78 LT	36"	36"	WOOD	4"x6"	1	
R-87	R6-1L	"ONE WAY"	M 116+20 LT	54"	18"				On same post as sign R-66

CONSTRUCTION NOTES:

POST LENGTHS SHOWN ARE APPROXIMATE. FINAL VALUES SHALL BE DETERMINED IN THE FIELD PRIOR TO FABRICATION.
FOR STRUCTURE AND MOUNTING DETAILS SEE STANDARD PLAN SHEET SERIES "G".
FOR CODE REFERENCES AND STANDARD DETAILS SEE WASHINGTON STATE SIGN FABRICATION MANUAL.

						REGION NO.	STATE	FED. AID PROJ. NO.
DESIGNED BY	J. JUN					10	WASH	
ENTERED BY	C. SHARMA							
CHECKED BY	D. PROCTOR					JOB NUMBER		
PROJ. ENGR.	H. LONGFELLOW							
REGION ADM.						CONTRACT NO.		
			REVISION	DATE	BY			

TULALIP TRIBES
Parametrix

I-5 / 116TH STREET NE
INTERCHANGE IMPROVEMENTS
PHASE 4 RAMPS

SIGN REMOVAL SPECIFICATIONS

REM1

SIGN REMOVAL SPECIFICATIONS

SIGN NO.	SIGN CODE	SIGN DESCRIPTION	STA. LOC. (or MP)	SIGN SIZE X	SIGN SIZE Y	POST MATERIAL	POST SIZE	# OF POSTS	REMARKS
R-88	R6-1R	"ONE WAY" (RIGHT)	M 116+20 LT	54"	18"				On same post as sign R-66
R-90	E5-1A	"EXIT 202"	SW 113+74 LT	48"	60"	STEEL	2.5" SQ.	1	
R-96	D1-901	I-5 SOUTH SEATTLE	M 117+85 LT	96"	48"	WOOD	4"x6"	2	
R-102	R5-1A	"WRONG WAY"	M 116+81 RT	42"	30"	STEEL	2.5" SQ	1	
R-104	E6-101 (MOD)	"EXIT 202", "116TH ST NE"	LM 213+35 RT	220"	108"				Mounted on existing Bridge No. 005/655, facing NB I-5 lanes
R-107	R5-1A	"WRONG WAY"	M 116+42 LT	36"	30"	STEEL	2.5" SQ	1	
R-129	R9-3A	NO PED. CROSSING SYMBOL	M116+93 LT	18"	18"	STEEL	2.5" SQ.	1	
R-130	R9-3BL	"USE CROSSWALK"	M116+93 LT	18"	12"				On same post as sign R-129
R-131	R9-3A	NO PED. CROSSING SYMBOL	M116+95 RT	18"	18"	STEEL	2.5" SQ.	1	
R-132	R9-3BL	"USE CROSSWALK"	M116+95 RT	18"	12"				On same post as sign R-131
R-133	R9-3A	NO PED. CROSSING SYMBOL	M123+18 RT	18"	18"	STEEL	2.5" SQ.	1	
R-134	R9-3BL	"USE CROSSWALK"	M123+18 RT	18"	12"				On same post as sign R-133
R-139	E6-101(MOD)	"EXIT 202", "116TH ST NE"	LM 236+75 LT	220"	108"	STEEL	W6x12	3	
R-140	Special	"NAVY SUPPORT COMPLEX"	SW 115+03 RT	36"	48"	STEEL	2.5" SQ.	1	
R-141	R5-1	"DO NOT ENTER"	M 116+84 LT	48"	48"				On same post as R-27
R-142	Special	"NO LOITERING"	M 116+84 LT	18"	12"				On same post as R-27
R-143	Special	"NO PARKING TOW AWAY ZONE"	WN 130+15 RT	24"	60"				Removed from existing luminair.
R-144	Special	"NAVY SUPPORT COMPLEX"	NE 126+81 LT	36"	48"	WOOD	4x4	1	
R-145	E5-1A	EXIT GORE SIGN, "EXIT 202"	NE 129+98 RT	48"	96"	STEEL	2.5" SQ.	1	
R-146	R3-8 MOD	LANE ASSIGNMENT	SW 118+29 RT	36"	36"	STEEL	2.25" SQ.	1	
R-147	R3-7R	"RIGHT LANE MUST TURN RIGHT"	M 124+69 LT	30"	30"	STEEL	2.5" SQ.	1	
R-148	R3-8 MOD	LANE ASSIGNMENT	NW 126+06 RT	24"	30"	STEEL	2.0" SQ	1	
R-149	R7-101	NO PARKING ANY TIME	M 116+40 RT	12"	18"	STEEL	2.0" SQ	1	
R-150	SPECIAL	PARK AND RIDE INFORMATION SIGN	M 116+30						Community Transit sign
R-151	SPECIAL	BUS STOP SIGN	M 116+28	18"	26"	STEEL	2.0" SQ	1	Community Transit sign
R-152	R5-1A	"WRONG WAY"	SE 120+23 RT	48"	30"	STEEL	2.5" SQ	1	
R-153	R5-1A	"WRONG WAY"	SW 119+38 RT	42"	30"	WOOD	4"x6"	1	
R-154	D1-901	I-5 NORTH VANCOUVER BC	M 122+24 RT	120"	48"	WOOD	4"x6"	2	
R-155	R6-1R	"ONE WAY" (RIGHT)	M 123+24 RT	54"	18"				Sign currently on the same post as sign R-18
R-166	SPECIAL	"NO LOITERING"	M 125+00 LT	24"	18"				On the same post as sign R-31
R-167	SPECIAL	"STATE PATROL"	NW 125+40 LT	36"	30"	STEEL	2.5" SQ.	1	

CONSTRUCTION NOTES:

POST LENGTHS SHOWN ARE APPROXIMATE. FINAL VALUES SHALL BE DETERMINED IN THE FIELD PRIOR TO FABRICATION.
FOR STRUCTURE AND MOUNTING DETAILS SEE STANDARD PLAN SHEET SERIES "G".
FOR CODE REFERENCES AND STANDARD DETAILS SEE WASHINGTON STATE SIGN FABRICATION MANUAL.

						REGION NO.	STATE	FED. AID PROJ. NO.
DESIGNED BY	J. JUN					10	WASH	
ENTERED BY	C. SHARMA					JOB NUMBER		
CHECKED BY	D. PROCTOR							
PROJ. ENGR.	H. LONGFELLOW					CONTRACT NO.		
REGION ADM.								
			REVISION	DATE	BY			

TULALIP TRIBES ©
Parametrix

I-5 / 116TH STREET NE
INTERCHANGE IMPROVEMENTS
PHASE 4 RAMPS

SIGN REMOVAL SPECIFICATIONS

REM2

SHEET 185 OF 238 SHEETS

CONSTRUCTION NOTES:

1. MAINTAIN AND PROTECT EXISTING SIGN. NOTIFY ENGINEER IF CONSTRUCTION RESULTS IN CONFLICT.
2. FOR SIGN POST ANCHORAGE SEE SHEET SN7.
3. MOUNT ON SIGN BRIDGE NO. 2.
4. MOUNT TO ELBOW BRACKET ON SEW TRAFFIC BARRIER.
5. MAINTAIN AND PROTECT EXISTING UTILITY CONDUIT WHILE INSTALLING SIGN POST. NOTIFY ENGINEER IF CONSTRUCTION RESULTS IN CONFLICT.

GENERAL NOTES:

1. WHEN RELOCATING SIGNS: RETAIN SIGN PANEL, REPLACE EXISTING WOOD POSTS WITH STEEL (IF APPLICABLE). SEE SIGN SPECIFICATIONS FOR TYPE, SIZE, AND LENGTH OF POST(S).
2. ALL MOTORISTS INFORMATION SIGNS SHALL BE RELOCATED TO THEIR PERMANENT LOCATION WITHIN 24 HOURS OF REMOVAL

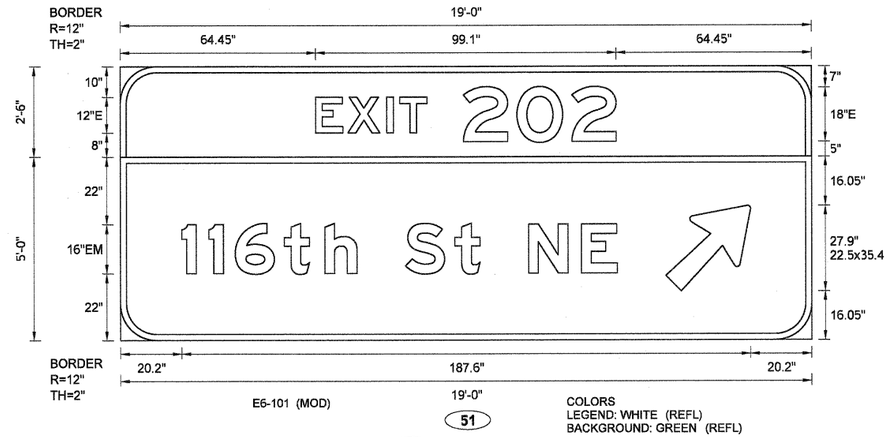

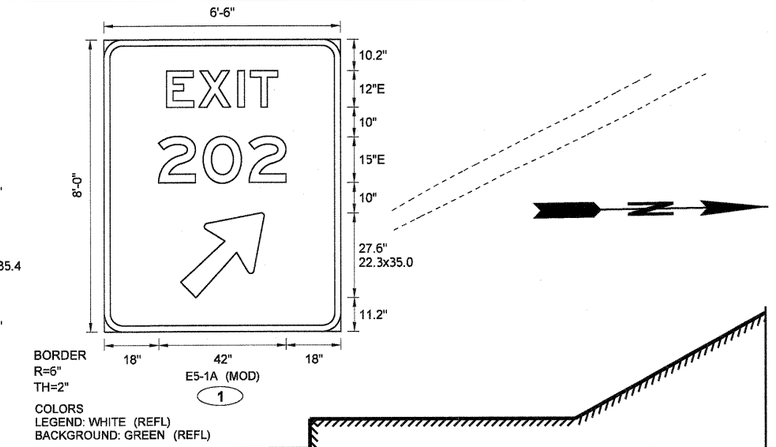

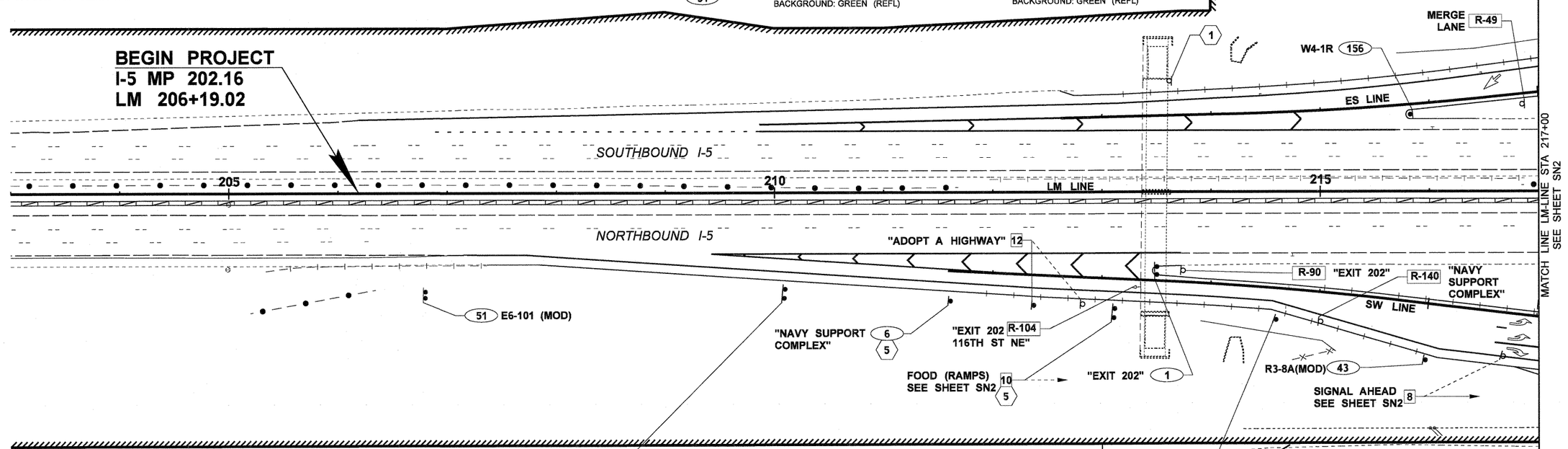

LEGEND

?	SIGN NO.		OVERHEAD SIGN
R-___	SIGN REMOVAL NO.		EXISTING OVERHEAD SIGN
?	NEW LOCATION SIGN RELOCATION NO. EXISTING LOCATION		EXISTING STRUCTURE MOUNTED SIGN
			STRUCTURE MOUNTED SIGN
	EXISTING SIGN(S) AND POST(S)		EXISTING CANTILEVER
	SIGN(S) & POST(S) OR RELOCATED SIGN(S) W/ NEW POST(S)		CANTILEVER
		?	CONSTRUCTION NOTE (SEE SHEET SN1 FOR CONSTRUCTION NOTES)
	SIGN ON PROPOSED LIGHT STANDARD		SIGN BRIDGE

GAS, FOOD (RAMPS) SEE SHEET SN2 11 5

"STATE PATROL" 4

0 50 100
SCALE IN FEET

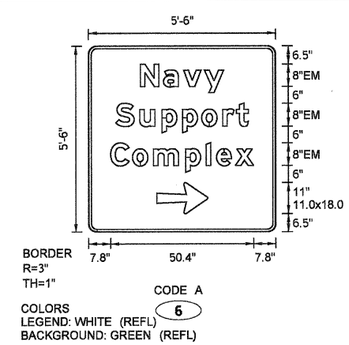

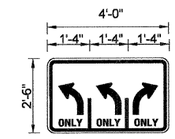

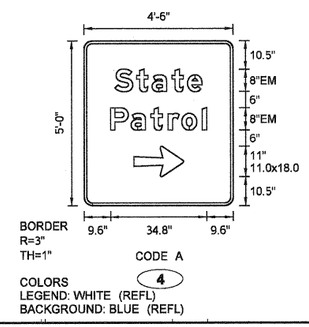

FILE NAME	U:\PSO\Projects\Clients\1598-TulalipTribes\554-1598-095 116th-Ph4-PSE\99Svcs\CADD\DGN\PS&ESheets\BL1598033_PS_SN.dgn
TIME	11:52:26 AM
DATE	8/25/2017
PLOTTED BY	purgabut
DESIGNED BY	J. JUN
ENTERED BY	B. PURGANAN
CHECKED BY	S. OLLING
APPROVED BY	H. LONGFELLOW

REVISION	DATE	BY

REGION NO.	STATE	FED.AID PROJ.NO.
10	WASH	
JOB NUMBER		
CONTRACT NO.		LOCATION NO.

P.E. STAMP BOX DATE

HARRY DAVID LONGFELLOW STATE OF WASHINGTON 38317902 REGISTERED PROFESSIONAL ENGINEER

P.E. STAMP BOX DATE

TULALIP TRIBES
Parametrix

I-5 / 116TH STREET NE INTERCHANGE IMPROVEMENTS PHASE 4 RAMPS

SIGNING PLAN

Plot 2

PLAN REF NO SN1

SHEET 186 OF 238 SHEETS

LEGEND

? SIGN NO.	OVERHEAD SIGN
R-___ SIGN REMOVAL NO.	EXISTING OVERHEAD SIGN
NEW LOCATION	EXISTING STRUCTURE MOUNTED SIGN
? SIGN RELOCATION NO.	STRUCTURE MOUNTED SIGN
EXISTING LOCATION	
EXISTING SIGN(S) AND POST(S)	EXISTING CANTILEVER
SIGN(S) & POST(S) OR RELOCATED SIGN(S) W/ NEW POST(S)	CANTILEVER
	? CONSTRUCTION NOTE (SEE SHEET SN1 FOR CONSTRUCTION NOTES)
SIGN ON PROPOSED LIGHT STANDARD	SIGN BRIDGE

CONSTRUCTION NOTES:

1. MAINTAIN AND PROTECT EXISTING SIGN. NOTIFY ENGINEER IF CONSTRUCTION RESULTS IN CONFLICT.
2. FOR SIGN POST ANCHORAGE SEE SHEET SN7.
3. MOUNT ON SIGN BRIDGE NO. 2.
4. MOUNT TO ELBOW BRACKET ON SEW TRAFFIC BARRIER.
5. MAINTAIN AND PROTECT EXISTING UTILITY CONDUIT WHILE INSTALLING SIGN POST. NOTIFY ENGINEER IF CONSTRUCTION RESULTS IN CONFLICT.

GENERAL NOTES:

1. WHEN RELOCATING SIGNS: RETAIN SIGN PANEL, REPLACE EXISTING WOOD POSTS WITH STEEL (IF APPLICABLE). SEE SIGN SPECIFICATIONS FOR TYPE, SIZE, AND LENGTH OF POST(S).
2. ALL MOTORISTS INFORMATION SIGNS SHALL BE RELOCATED TO THEIR PERMANENT LOCATION WITHIN 24 HOURS OF REMOVAL

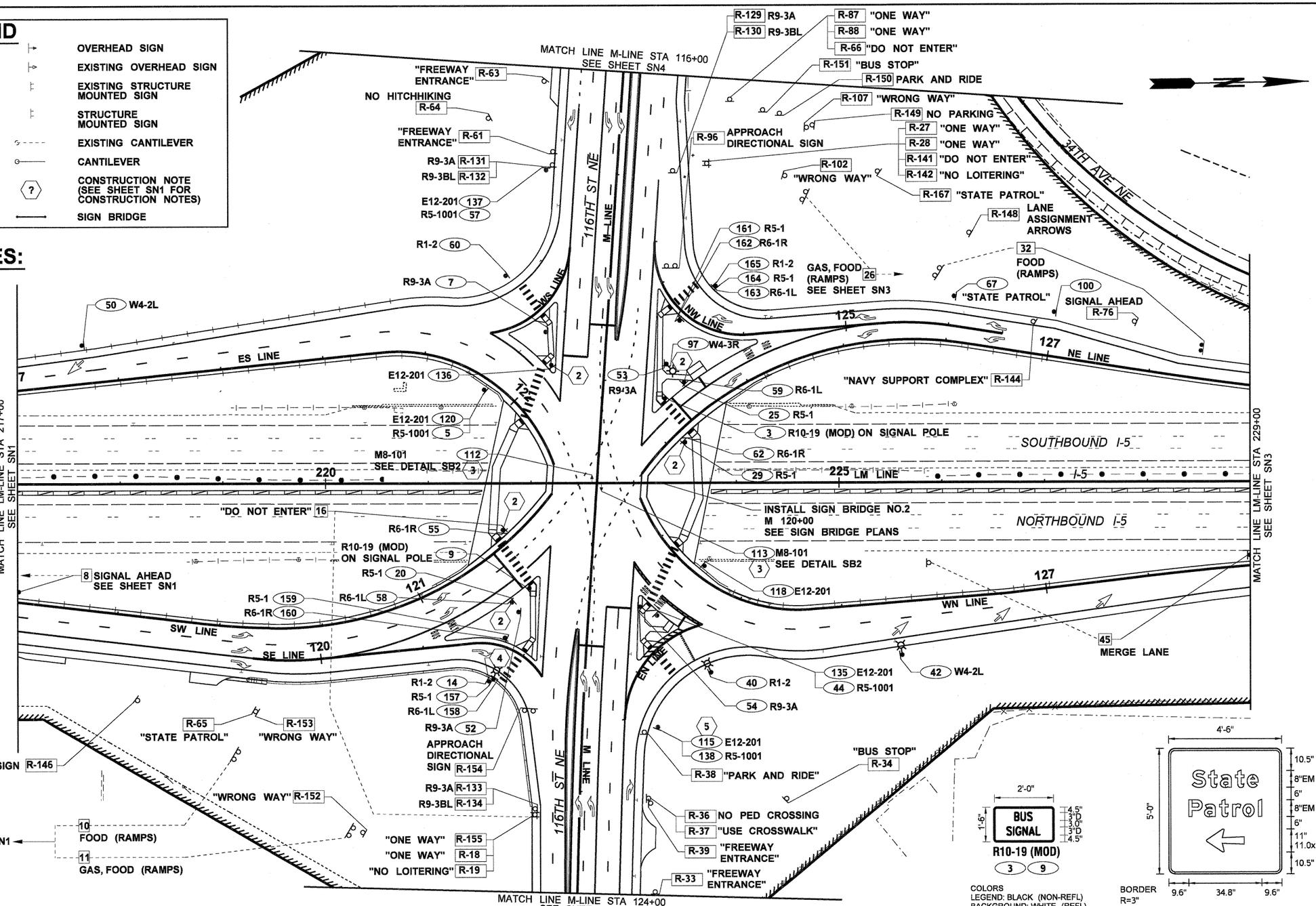

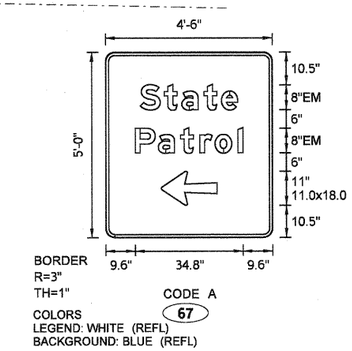

FILE NAME	U:\PSO\Projects\Clients\1598-TulalipTribes\554-1598-095 116th-Ph4-PSE\99Svcs\CADD\DGN\PS&ESheets\BL1598033_PS_SN.dgn
TIME	11:52:39 AM
DATE	8/25/2017
PLOTTED BY	purgabut
DESIGNED BY	J. JUN
ENTERED BY	B. PURGANAN
CHECKED BY	S. OLLING
APPROVED BY	H. LONGFELLOW

REVISION	DATE	BY

REGION NO.	STATE	FED.AID PROJ.NO.
10	WASH	
JOB NUMBER		
CONTRACT NO.		LOCATION NO.

P.E. STAMP BOX DATE

P.E. STAMP BOX DATE

TULALIP TRIBES
Parametrix

I-5 / 116TH STREET NE INTERCHANGE IMPROVEMENTS PHASE 4 RAMPS

SIGNING PLAN

Plot 3

PLAN REF NO SN2

SHEET 187 OF 238 SHEETS

GENERAL NOTES:

1. WHEN RELOCATING SIGNS: RETAIN SIGN PANEL, REPLACE EXISTING WOOD POSTS WITH STEEL (IF APPLICABLE). SEE SIGN SPECIFICATIONS FOR TYPE, SIZE, AND LENGTH OF POST(S).
2. ALL MOTORISTS INFORMATION SIGNS SHALL BE RELOCATED TO THEIR PERMANENT LOCATION WITHIN 24 HOURS OF REMOVAL

CONSTRUCTION NOTES:

1. MAINTAIN AND PROTECT EXISTING SIGN. NOTIFY ENGINEER IF CONSTRUCTION RESULTS IN CONFLICT.
2. FOR SIGN POST ANCHORAGE SEE SHEET SN7.
3. MOUNT ON SIGN BRIDGE NO. 2.
4. MOUNT TO ELBOW BRACKET ON SEW TRAFFIC BARRIER.
5. MAINTAIN AND PROTECT EXISTING UTILITY CONDUIT WHILE INSTALLING SIGN POST. NOTIFY ENGINEER IF CONSTRUCTION RESULTS IN CONFLICT.

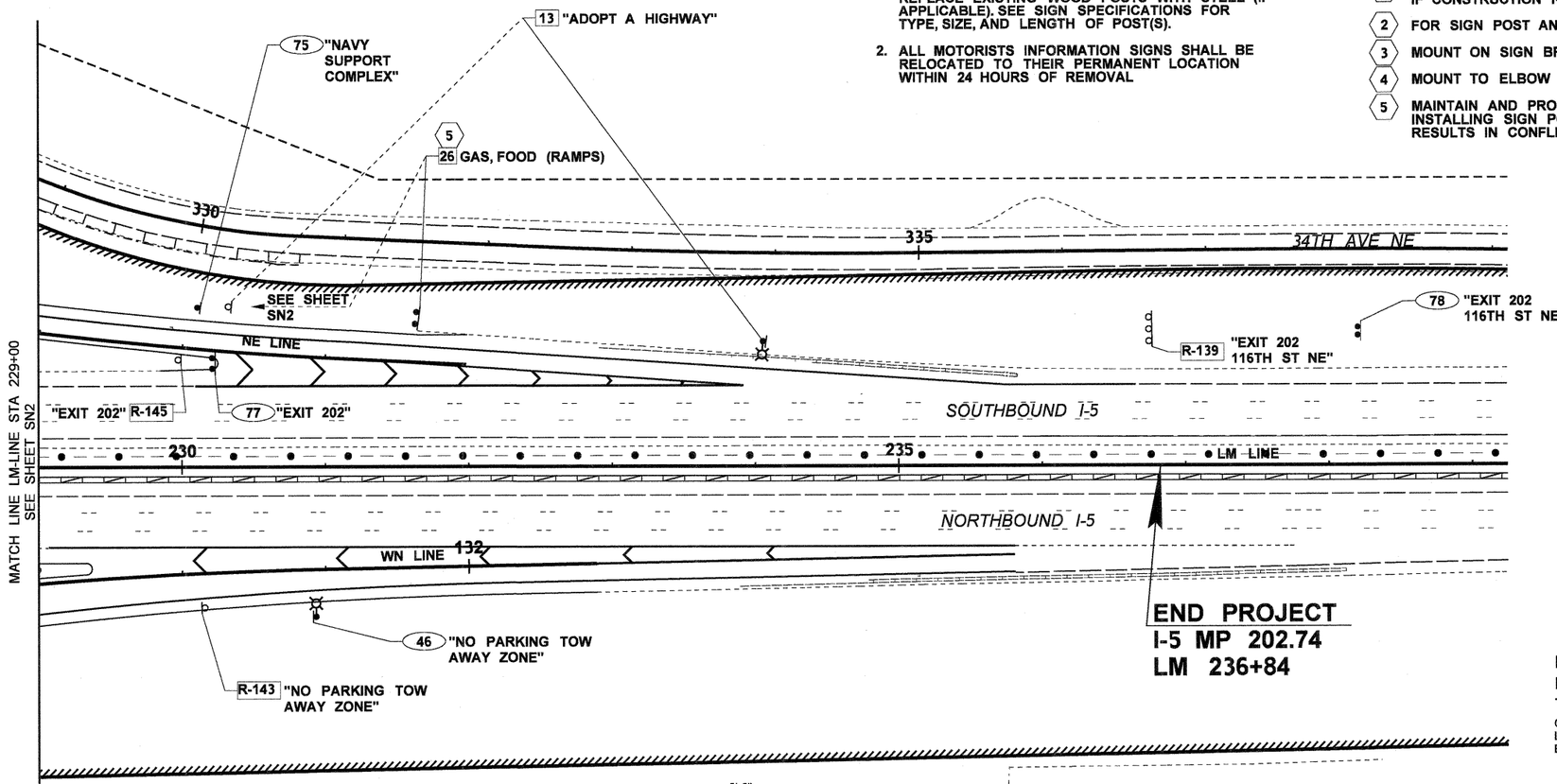

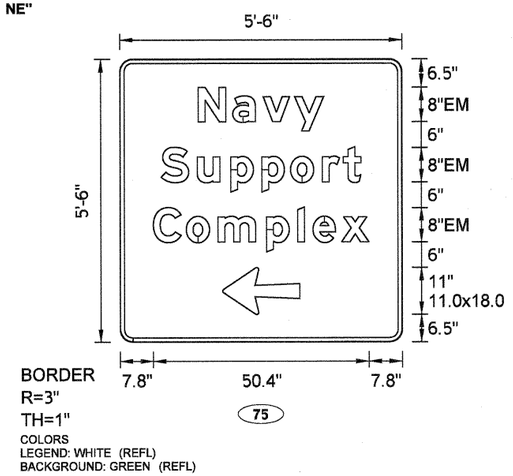

LEGEND

?	SIGN NO.		OVERHEAD SIGN
R-___	SIGN REMOVAL NO.		EXISTING OVERHEAD SIGN
	NEW LOCATION		EXISTING STRUCTURE MOUNTED SIGN
?	SIGN RELOCATION NO.		STRUCTURE MOUNTED SIGN
	EXISTING LOCATION		EXISTING CANTILEVER
	EXISTING SIGN(S) AND POST(S)		CANTILEVER
	SIGN(S) & POST(S) OR RELOCATED SIGN(S) W/ NEW POST(S)	?	CONSTRUCTION NOTE (SEE SHEET SN1 FOR CONSTRUCTION NOTES)
	SIGN ON PROPOSED LIGHT STANDARD		SIGN BRIDGE

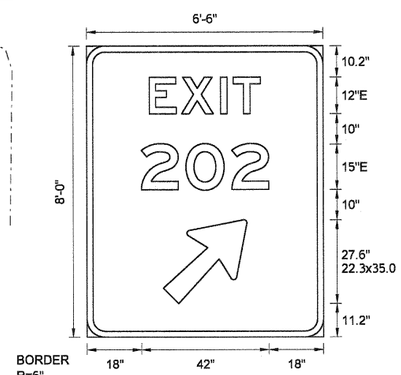

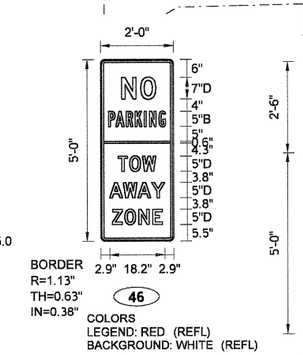

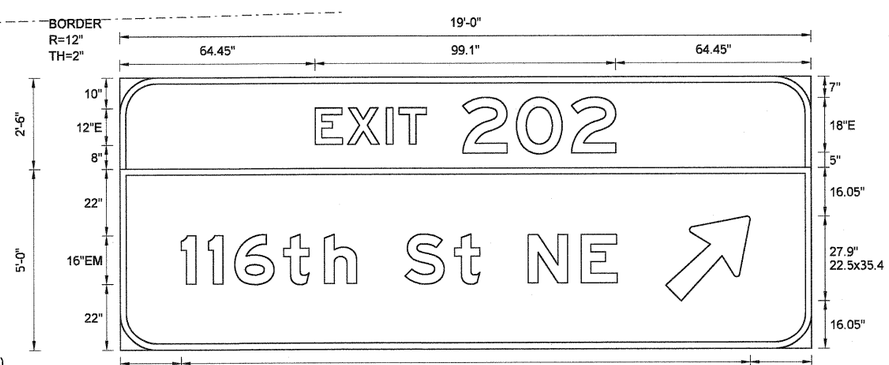

0 50 100
SCALE IN FEET

FILE NAME	U:\PSO\Projects\Clients\1598-TulalipTribes\554-1598-095 116th-Ph4-PSE\99Svcs\CADD\DGN\PS&ESheets\BL1598033_PS_SN.dgn
TIME	11:53:01 AM
DATE	8/25/2017
PLOTTED BY	purgabut
DESIGNED BY	J. JUN
ENTERED BY	B. PURGANAN
CHECKED BY	S. OLLING
APPROVED BY	H. LONGFELLOW

REVISION | DATE | BY

REGION NO.	STATE	FED.AID PROJ.NO.
10	WASH	
JOB NUMBER		
CONTRACT NO.		LOCATION NO.

P.E. STAMP BOX — DATE

HARRY DAVID LONGFELLOW, STATE OF WASHINGTON, 37902, REGISTERED PROFESSIONAL ENGINEER — DATE — P.E. STAMP BOX

TULALIP TRIBES — Parametrix

I-5 / 116TH STREET NE INTERCHANGE IMPROVEMENTS PHASE 4 RAMPS

SIGNING PLAN

Plot 4

PLAN REF NO SN3

SHEET 188 OF 238 SHEETS

LEGEND

? SIGN NO.	OVERHEAD SIGN
R-___ SIGN REMOVAL NO.	EXISTING OVERHEAD SIGN
NEW LOCATION	EXISTING STRUCTURE MOUNTED SIGN
? SIGN RELOCATION NO.	STRUCTURE MOUNTED SIGN
EXISTING LOCATION	EXISTING CANTILEVER
EXISTING SIGN(S) AND POST(S)	CANTILEVER
SIGN(S) & POST(S) OR RELOCATED SIGN(S) W/ NEW POST(S)	CONSTRUCTION NOTE (SEE SHEET SN1 FOR CONSTRUCTION NOTES)
SIGN ON PROPOSED LIGHT STANDARD	SIGN BRIDGE

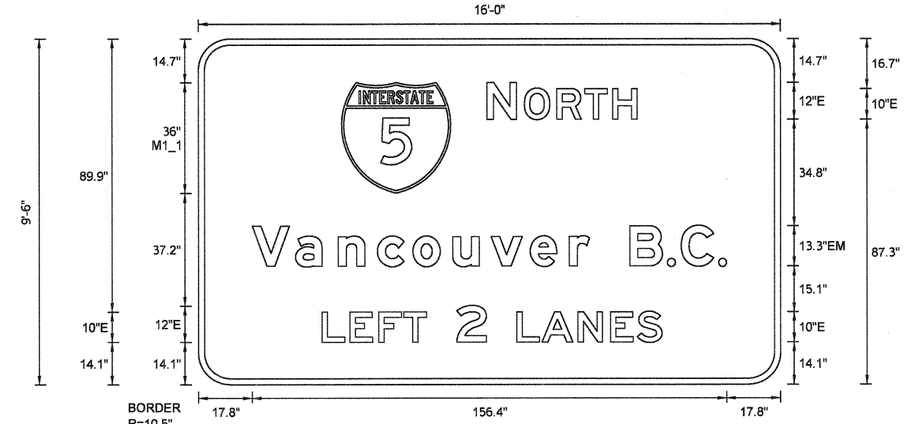

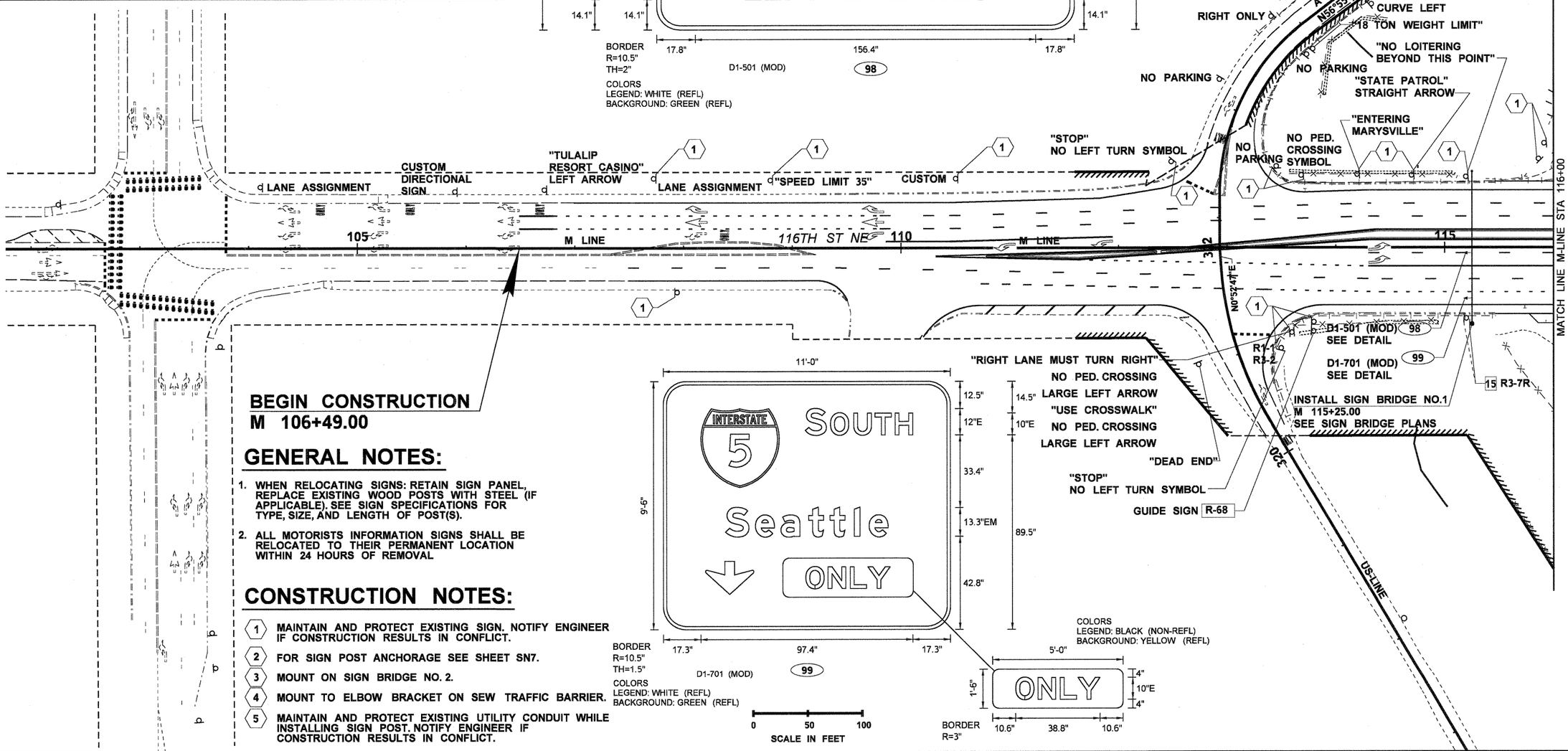

BEGIN CONSTRUCTION
M 106+49.00

GENERAL NOTES:

1. WHEN RELOCATING SIGNS: RETAIN SIGN PANEL, REPLACE EXISTING WOOD POSTS WITH STEEL (IF APPLICABLE). SEE SIGN SPECIFICATIONS FOR TYPE, SIZE, AND LENGTH OF POST(S).
2. ALL MOTORISTS INFORMATION SIGNS SHALL BE RELOCATED TO THEIR PERMANENT LOCATION WITHIN 24 HOURS OF REMOVAL

CONSTRUCTION NOTES:

1. MAINTAIN AND PROTECT EXISTING SIGN. NOTIFY ENGINEER IF CONSTRUCTION RESULTS IN CONFLICT.
2. FOR SIGN POST ANCHORAGE SEE SHEET SN7.
3. MOUNT ON SIGN BRIDGE NO. 2.
4. MOUNT TO ELBOW BRACKET ON SEW TRAFFIC BARRIER.
5. MAINTAIN AND PROTECT EXISTING UTILITY CONDUIT WHILE INSTALLING SIGN POST. NOTIFY ENGINEER IF CONSTRUCTION RESULTS IN CONFLICT.

FILE NAME	U:\PSO\Projects\Clients\1598-TulalipTribes\554-1598-095 116th-Ph4-PSE\99Svcs\CADD\DGN\PS&ESheets\BL1598033_PS_SN.dgn
TIME	11:53:13 AM
DATE	8/25/2017
PLOTTED BY	purgabut
DESIGNED BY	J. JUN
ENTERED BY	B. PURGANAN
CHECKED BY	S. OLLING
APPROVED BY	H. LONGFELLOW

REVISION	DATE	BY

REGION NO.	STATE	FED.AID PROJ.NO.
10	WASH	
JOB NUMBER		
CONTRACT NO.		LOCATION NO.

P.E. STAMP BOX — DATE

P.E. STAMP BOX — DATE

Parametrix

I-5 / 116TH STREET NE INTERCHANGE IMPROVEMENTS PHASE 4 RAMPS

SIGNING PLAN

Plot 6

PLAN REF NO SN4

SHEET 189 OF 238 SHEETS

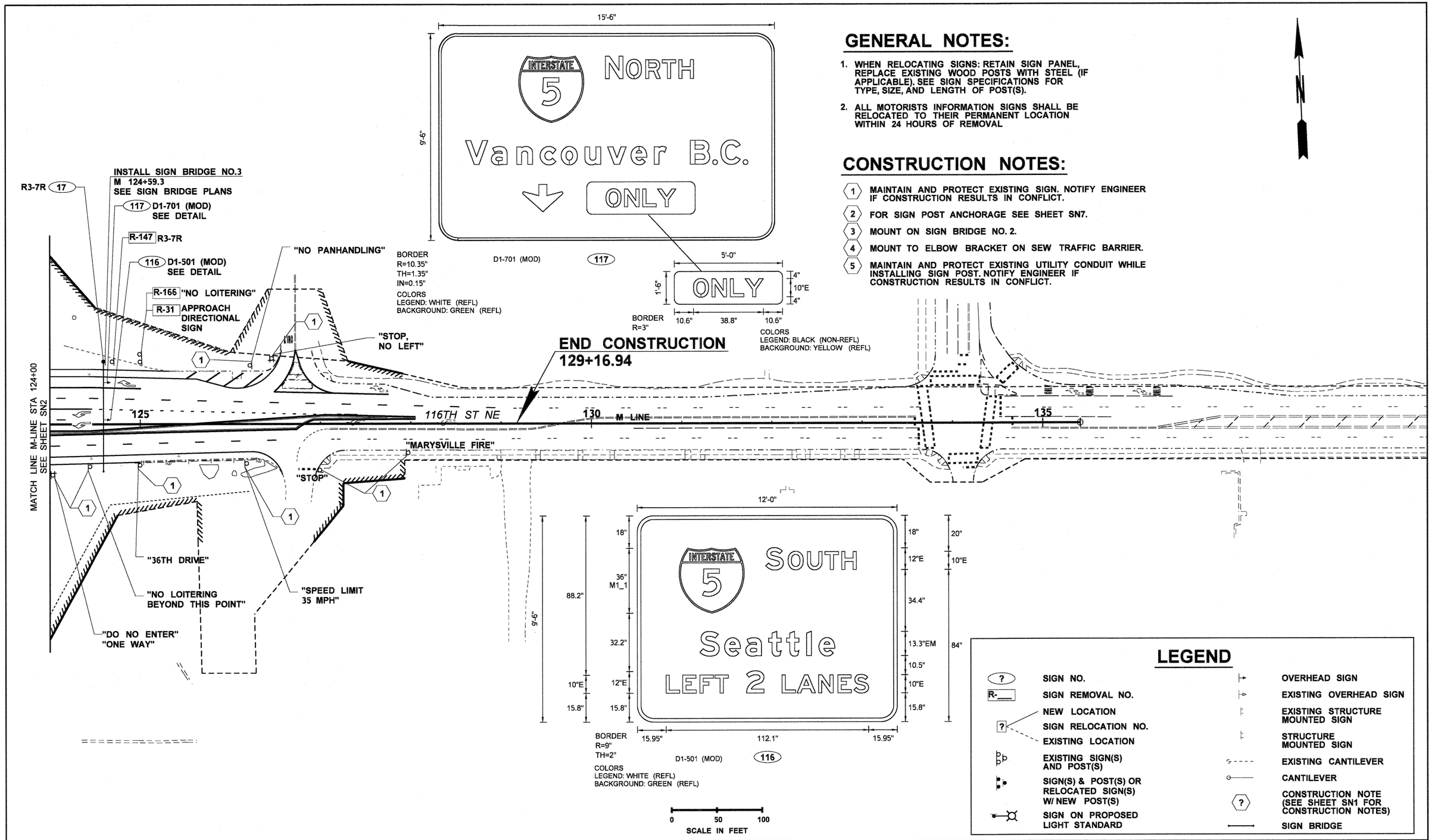

GENERAL NOTES:

1. WHEN RELOCATING SIGNS: RETAIN SIGN PANEL, REPLACE EXISTING WOOD POSTS WITH STEEL (IF APPLICABLE). SEE SIGN SPECIFICATIONS FOR TYPE, SIZE, AND LENGTH OF POST(S).
2. ALL MOTORISTS INFORMATION SIGNS SHALL BE RELOCATED TO THEIR PERMANENT LOCATION WITHIN 24 HOURS OF REMOVAL

CONSTRUCTION NOTES:

1. MAINTAIN AND PROTECT EXISTING SIGN. NOTIFY ENGINEER IF CONSTRUCTION RESULTS IN CONFLICT.
2. FOR SIGN POST ANCHORAGE SEE SHEET SN7.
3. MOUNT ON SIGN BRIDGE NO. 2.
4. MOUNT TO ELBOW BRACKET ON SEW TRAFFIC BARRIER.
5. MAINTAIN AND PROTECT EXISTING UTILITY CONDUIT WHILE INSTALLING SIGN POST. NOTIFY ENGINEER IF CONSTRUCTION RESULTS IN CONFLICT.

LEGEND

?	SIGN NO.		OVERHEAD SIGN
R-__	SIGN REMOVAL NO.		EXISTING OVERHEAD SIGN
	NEW LOCATION		EXISTING STRUCTURE MOUNTED SIGN
?	SIGN RELOCATION NO.		STRUCTURE MOUNTED SIGN
	EXISTING LOCATION		
	EXISTING SIGN(S) AND POST(S)		EXISTING CANTILEVER
	SIGN(S) & POST(S) OR RELOCATED SIGN(S) W/ NEW POST(S)		CANTILEVER
	SIGN ON PROPOSED LIGHT STANDARD	?	CONSTRUCTION NOTE (SEE SHEET SN1 FOR CONSTRUCTION NOTES)
			SIGN BRIDGE

FILE NAME	U:\PSO\Projects\Clients\1598-TulalipTribes\554-1598-095 116th-Ph4-PSE\99Svcs\CADD\DGN\PS&ESheets\BL1598033_PS_SN.dgn
TIME	11:53:25 AM
DATE	8/25/2017
PLOTTED BY	purgabut
DESIGNED BY	J. JUN
ENTERED BY	B. PURGANAN
CHECKED BY	S. OLLING
APPROVED BY	H. LONGFELLOW

REVISION	DATE	BY

REGION NO.	STATE	FED.AID PROJ.NO.
10	WASH	
JOB NUMBER		
CONTRACT NO.		LOCATION NO.

P.E. STAMP BOX — DATE

HARRY DAVID LONGFELLOW — STATE OF WASHINGTON — REGISTERED PROFESSIONAL ENGINEER — P.E. STAMP BOX — DATE

TULALIP TRIBES — Parametrix

I-5 / 116TH STREET NE INTERCHANGE IMPROVEMENTS PHASE 4 RAMPS

SIGNING PLAN

Plot 7

PLAN REF NO SN5

SHEET 190 OF 238 SHEETS

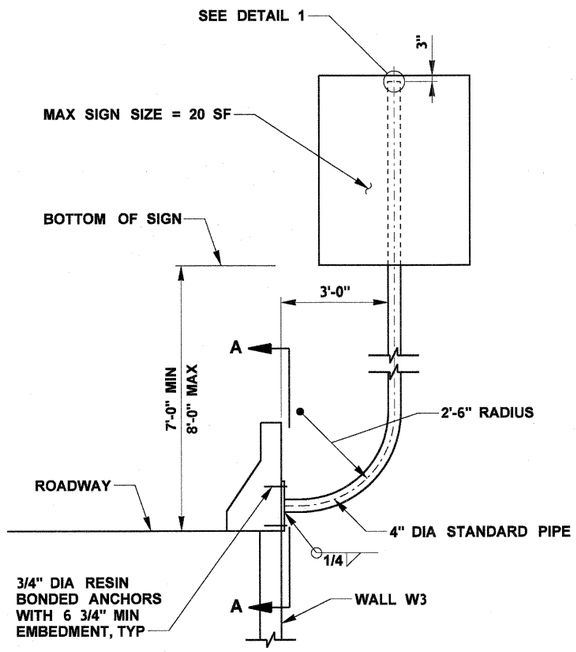

RETAINING WALL ELBOW MOUNTING DETAIL

NOT TO SCALE

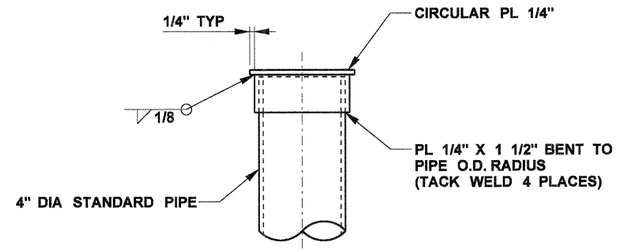

DETAIL 1 / -

NOT TO SCALE

GENERAL NOTES:

ALL MATERIALS AND WORKMANSHIP SHALL BE IN ACCORDANCE WITH THE REQUIREMENTS OF THE WASHINGTON STATE DEPARTMENT OF TRANSPORTATION STANDARD SPECIFICATIONS FOR ROAD, BRIDGE AND MUNICIPAL CONSTRUCTION DATES 2016, AND AMENDMENTS.

SIGN SUPPORT COMPONENTS HAVE BEEN DESIGNED TO MEET THE REQUIREMENTS OF AASHTO LRFD SPECIFICATIONS FOR STRUCTURAL SUPPORTS FOR HIGHWAY SIGNS, LUMINAIRES, AND TRAFFIC SIGNALS, DATED 2015 AND INTERIMS. USING BASIC WIND SPEED OF 115 MPH AND 75 YEAR DESIGN LIFE.

MATERIALS SPECIFICATIONS:

PLATES & BARS	ASTM A36
PIPES	ASTM A53 GRADEB, OR ASTM A500, GRADE B
RESIN BONDED ANCHORS	ALL THREADED ROD: ASTM F1554 GRADE 105 NUTS: ASTM A563 GRADE DH WASHERS: ASTM F436
EPOXY RESIN	STD, SPEC. 9-26.1 (TYPE IV)

ALL NON-STAINLESS STEEL PARTS SHALL BE GALVANIZED IN ACCORDANCE WITH ASSHTO M 111 AFTER FABRICATION. BOLTS AND HARDWARE SHALL BE GALVANIZED IN ACCORDANCE WITH AASHTO M 232.

SIZE OF FILLET WELD SHALL BE 1/4" MINIMUM EXCEPT WHERE NOTED.

POST SHALL BE INSTALLED PLUMB.

RESIN BONDED ANCHORS SHALL NOT BE CORE DRILLED.

FOR SIGH BRACING DETAILS SEE STANDARD PLAN G-50.10.

NO RESIN BONDED ANCHORS SHALL BE NEARER THAN 1'-6" FROM A VERTICAL EXPANSION JOINT.

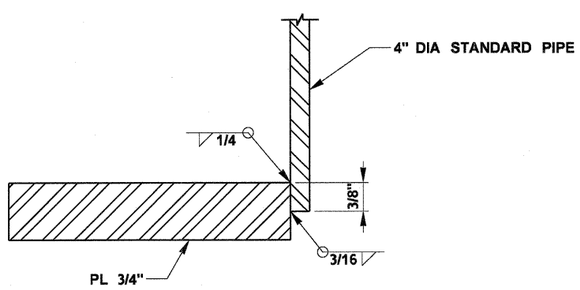

SECTION B / -

NOT TO SCALE

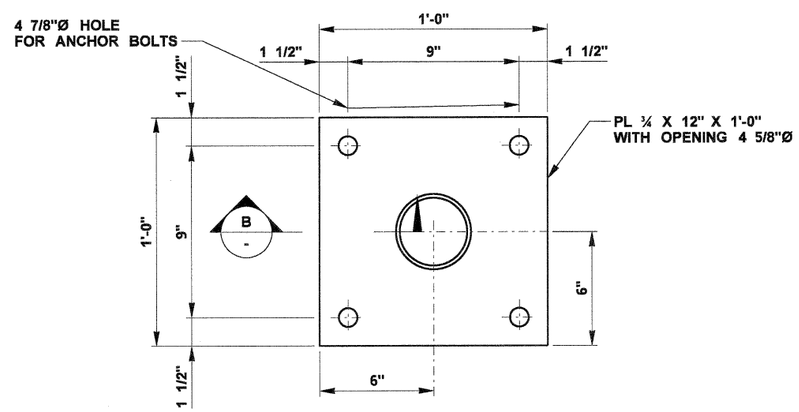

VIEW A / -

NOT TO SCALE

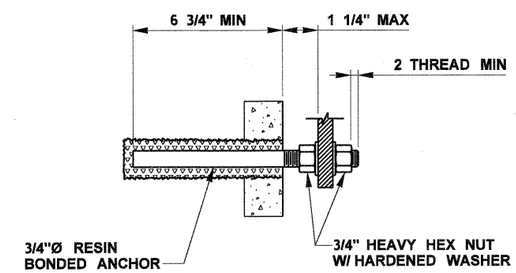

ANCHOR BOLT DETAIL

NOT TO SCALE

INSTALL ANCHOR BOLT NORMAL TO CONRETE

FILE NAME	U:\PSO\Projects\Clients\1598-TulalipTribes\554-1598-095 116th-Ph4-PSE\99Svcs\CADD\DGN\PS&ESheets\BL1598033_PS_SN.dgn
TIME	11:53:36 AM
DATE	8/25/2017
PLOTTED BY	purgabut
DESIGNED BY	J. JUN
ENTERED BY	B. PURGANAN
CHECKED BY	S. OLLING
APPROVED BY	H. LONGFELLOW

REVISION | DATE | BY

REGION NO. 10 | STATE WASH | FED.AID PROJ.NO.

JOB NUMBER

CONTRACT NO. | LOCATION NO.

P.E. STAMP BOX DATE

HARRY DAVID LONGFELLOW, STATE OF WASHINGTON, 37902, REGISTERED PROFESSIONAL ENGINEER

P.E. STAMP BOX DATE

TULALIP TRIBES Parametrix

I-5 / 116TH STREET NE INTERCHANGE IMPROVEMENTS PHASE 4 RAMPS

SIGN DETAILS

Plot 8

PLAN REF NO SN6

SHEET 191 OF 238 SHEETS

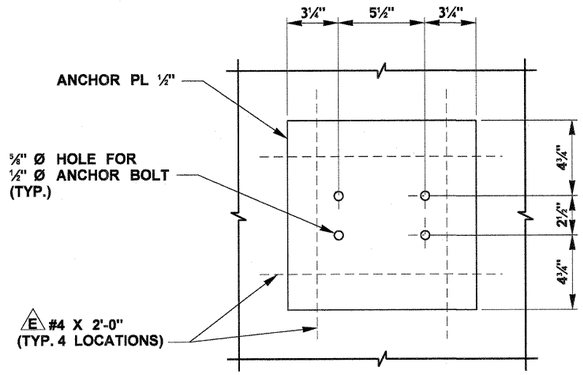

VIEW B
NOT TO SCALE

SIGN POST ANCHORAGE NOTES:

1. ALL BOLTS AND RELATED HARDWARE SHALL BE GALVANIZED AFTER FABRICATION PER AASHTO M232.
2. ALL EXPOSED STEEL SURFACES OF THE SIGN POST ANCHORAGE ASSEMBLY SHALL BE GALVANIZED AFTER FABRICATION IN ACCORDANCE WITH ASSHTO M111.
3. MATERIAL SPECIFICATIONS:

PLATES & BARS	ASTM A 36
ANCHOR BOLTS	ASTM A 449, TYPE 1
REBAR	ASTM A 615, GRADE 60

4. CONTRACTOR TO ENSURE LEVEL SURFACE AT TEMPLATE PLATE PRIOR TO CASTING ANCHOR BOLT ARRAY AND ANCHOR PLATE INTO TRAFFIC ISLAND BASE.

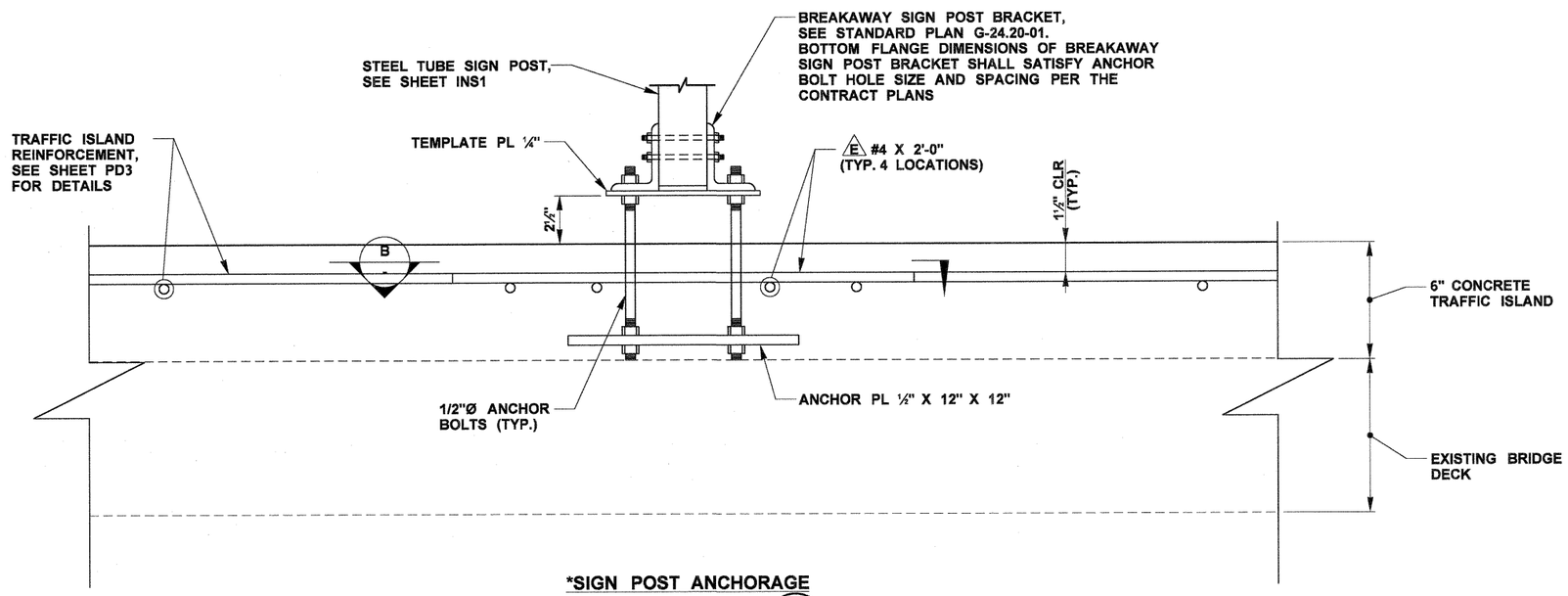

***SIGN POST ANCHORAGE DETAIL 2**
NOT TO SCALE

*ADJUST TRAFFIC ISLAND REINFORCEMENT TO CLEAR ANCHORAGE

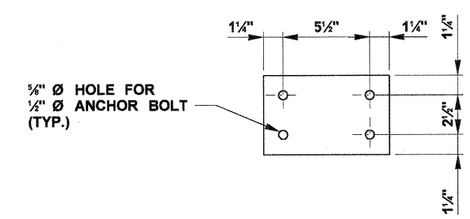

TEMPLATE PL DETAIL
DETAIL 3
NOT TO SCALE

FILE NAME	U:\PSO\Projects\Clients\1598-TulalipTribes\554-1598-095 116th-Ph4-PSE\99Svcs\CADD\DGN\PS&ESheets\BL1598033_PS_SN.dgn
TIME	11:53:46 AM
DATE	8/25/2017
PLOTTED BY	purgabut
DESIGNED BY	J. JUN
ENTERED BY	B. PURGANAN
CHECKED BY	S. OLLING
APPROVED BY	H. LONGFELLOW

REVISION	DATE	BY

REGION NO.	STATE	FED.AID PROJ.NO.
10	WASH	
JOB NUMBER		
CONTRACT NO.		LOCATION NO.

P.E. STAMP BOX — DATE

STAMP DAVID LONGFELLOW, STATE OF WASHINGTON, 37902, REGISTERED PROFESSIONAL ENGINEER, 8/25/17

P.E. STAMP BOX — DATE

TULALIP TRIBES
Parametrix

I-5 / 116TH STREET NE INTERCHANGE IMPROVEMENTS PHASE 4 RAMPS

SIGN DETAILS

Plot 9
PLAN REF NO
SN7
SHEET 192 OF 238 SHEETS

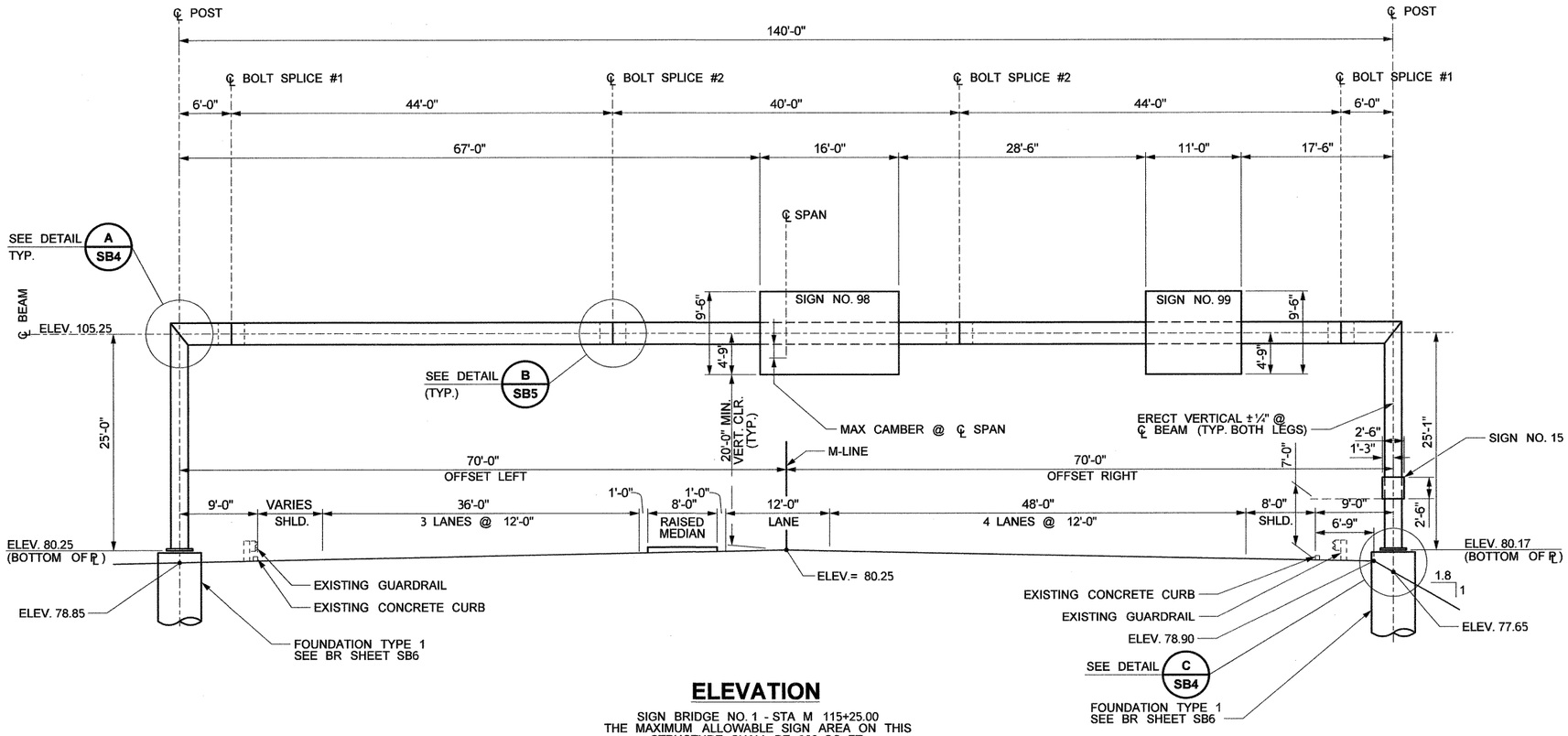

ELEVATION

SIGN BRIDGE NO. 1 - STA M 115+25.00
THE MAXIMUM ALLOWABLE SIGN AREA ON THIS STRUCTURE SHALL BE 900 SQ. FT.

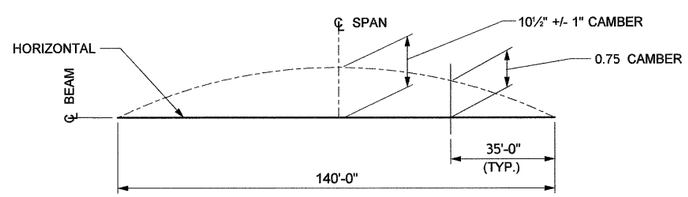

BEAM CAMBER DIAGRAM

GENERAL NOTES

1. ALL MATERIAL AND WORKMANSHIP SHALL BE IN ACCORDANCE WITH THE REQUIREMENTS OF THE WASHINGTON STATE DEPARTMENT OF TRANSPORTATION STANDARD SPECIFICATIONS FOR ROAD, BRIDGE, AND MUNICIPAL CONSTRUCTION DATED 2016 AND AMENDMENTS.
2. THE SIGN STRUCTURES DESIGN AND ANALYSIS HAS BEEN DONE IN ACCORDANCE WITH AASHTO LRFD SPECIFICATIONS FOR STRUCTURAL SUPPORTS FOR HIGHWAY SIGNS, LUMINAIRES AND TRAFFIC SIGNALS - FIRST EDITION - DATED 2015 AND INTERIMS, USING BASIC WIND SPEED OF 115 MPH AND 75 YEARS OF DESIGN LIFE. FATIGUE DESIGN OF THE STRUCTURE CONFORMS TO FATIGUE CATEGORY 1 OF THE SPECIFIED AASHTO LRFD SPECIFICATIONS.
3. ALL BUTT JOINT WELDS SHALL BE FULL PENETRATION GROOVE WELDS WITH BACK-UP PLATES OF ¼" MIN. THICKNESS.
4. THE BACK-UP PLATES FOR ALL FULL PENETRATION WELDS SHALL BE WELDED CONTINUOUSLY TO THE JOINED PIECES. THIS CAN BE DONE BY EITHER A CONTINUOUS FILLET WELD ON THE BACK SIDE OF THE PIECE, OR BY A CONTINUOUS WELD IN THE ROOT OF THE FULL PENETRATION WELD, UNLESS OTHERWISE NOTED.
5. ALL BOLTS, RODS, AND RELATED HARDWARE SHALL BE GALVANIZED AFTER FABRICATION IN ACCORDANCE WITH ASTM F2329.
6. ALL STEEL SURFACES OF MONOTUBE SIGN STRUCTURE SHALL BE GALVANIZED AFTER FABRICATION IN ACCORDANCE WITH AASHTO M 111. ALL EXTERIOR STEEL SURFACES SHALL BE PAINTED IN ACCORDANCE WITH THE SPECIAL PROVISIONS.
7. SIGN PANELS AS SHOWN IN THE CONTRACT PLANS SHALL BE INSTALLED WITH THE SIGN STRUCTURE OR IMMEDIATELY AFTER THE SIGN STRUCTURE IS ERECTED.
8. FABRICATE BEAM TO PROVIDE SMOOTH PARABOLIC CAMBER CURVE. SEE CAMBER DIAGRAM. DO NOT SHIM AT BOLTED SPLICES.
9. FABRICATE POST STRAIGHT.
10. MATERIALS SPECIFICATIONS:

ALL STRUCTURAL STEEL EXCEPT AS OTHERWISE NOTED	ASTM A 572 GR. 50 OR ASTM A 588
ANCHOR RODS	ASTM F 1554 GR. 105
HANDHOLE COVER SCREWS	ASTM F 593 GR. 1
SPLICE BOLTS	ASTM A325
SIGN BRACKET RODS	ASTM A 307
MOUNTING BEAM BOLTS	ASTM A325
COVER PLATES	ASTM A 36

11. BOTTOM OF BASE PLATE ELEVATIONS AND POST HEIGHTS SHOWN ARE APPROXIMATE. THE CONTRACTOR SHALL FIELD MEASURE ANCHOR ROD LOCATIONS, ELEVATIONS, CLEARANCES AND ALL STEEL STRUCTURE DIMENSIONS, AND SUBMIT TO ENGINEER FOR APPROVAL PRIOR TO COMPLETION OF FABRICATION. AS AN OPTION FOR SIGN BRIDGES, CAP OF ONE FOUNDATION MAY BE PLACED WHILE COMPLETED SIGN BRIDGE IS TEMPORARILY SUPPORTED IN PLACE.
12. POSTS, BASE PLATES, BEAMS AND SPLICE PLATES ARE MAIN LOAD CARRYING TENSILE MEMBERS OR TENSION COMPONENTS OF FLEXURAL MEMBERS AND SHALL MEET THE LONGITUDINAL CHARPY V-NOTCH TEST AS DESCRIBED IN SECTION 6-03.2 FOR AASHTO M 270 MATERIAL. NON-DESTRUCTIVE TEST ACCEPTANCE CRITERIA TO CONFORM TO TENSILE MEMBERS WITH CYCLIC LOAD.
13. SEE OTHER PLANS FOR CONDUIT PENETRATIONS AND HAND HOLES. REFER TO ELECTRICAL PLANS FOR INTERNAL ROUTING OF CONDUCTORS. CONDUIT CONDUCTORS SHALL NOT BE ATTACHED TO THE OUTSIDE OF THE SIGN STRUCTURE. SEE NEMA 3R TERMINAL CABINET DETAIL ON SHEET SB4.
14. THE MAXIMUM SIGN AREA ON THE STRUCTURE SHALL BE AS NOTED.
15. FOR SIGN AND LIGHT ATTACHMENT BRACKET DETAILS FOR MONOTUBES SEE STANDARD PLAN G-90.20. PAINT ENTIRE ATTACHMENT BRACKET TO MATCH EXISTING STRUCTURE EXCEPT FOR MOUNTING BEAM. SIGN, BEAM LENGTHS, AND SIZE SHALL BE DETERMINED FROM THE STANDARD PLANS. SPACING SHALL BE DETERMINED FROM THE CONTRACT PLANS.
16. ALL WELDING SHALL BE DONE TO MINIMIZE DISTORTION. PERMISSIBLE MONOTUBE DIMENSION VARIATIONS FOR OUTSIDE DIMENSIONS, WALL THICKNESS, LENGTH, STRAIGHTNESS ★, SQUARENESS OF SIDES AND TWIST SHALL BE IN ACCORDANCE WITH SECTION 11 OF ASTM A500 (★ PARABOLICALLY CAMBERED SIGN BRIDGE BEAMS EXCLUDED).

FILE NAME	U:\PSO\Projects\Clients\1598-TulalipTribes\554-1598-095 116th-Ph4-PSE\99Svcs\CADD\DGN\Bridge\BL 1598033_BG_MTS_1.dgn						
TIME	10:14:28 AM				REGION NO.	STATE	FED.AID PROJ.NO.
DATE	8/30/2017				10	WASH	
PLOTTED BY	purgabut				JOB NUMBER		
DESIGNED BY	B. ROGERS						
ENTERED BY	A. VALENCIA				CONTRACT NO.		LOCATION NO.
CHECKED BY	J. MERTH						
APPROVED BY	H. LONGFELLOW						
REGIONAL ADM.		REVISION	DATE	BY			

DATE
P.E. STAMP BOX

JOSEPH R. MERTH
STATE OF WASHINGTON
33224
REGISTERED PROFESSIONAL ENGINEER

DATE
P.E. STAMP BOX

TULALIP TRIBES
Parametrix

I-5 / 116TH STREET NE
INTERCHANGE IMPROVEMENTS
PHASE 4 RAMPS

SIGN BRIDGE NO. 1
LAYOUT

Plot 1
PLAN REF NO
SB1
SHEET 193 OF 238 SHEETS

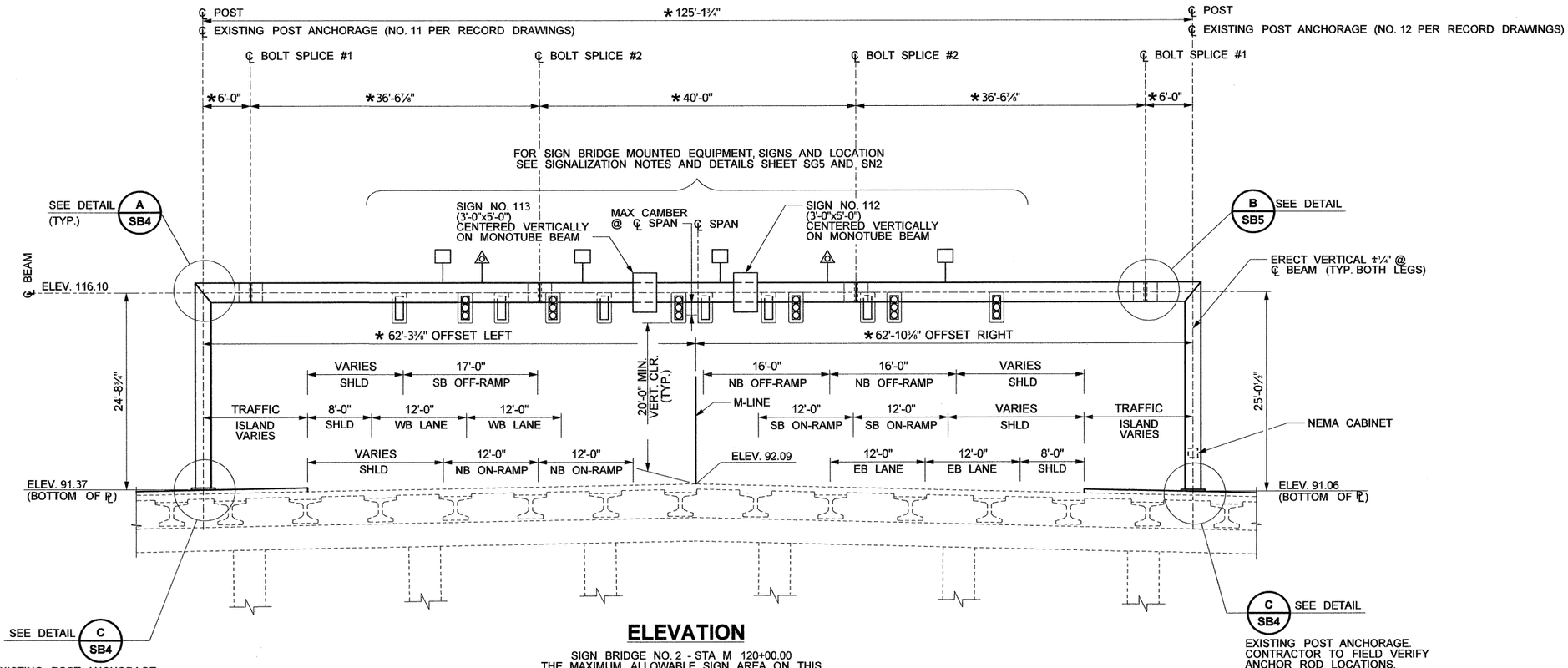

EXISTING POST ANCHORAGE. CONTRACTOR TO FIELD VERIFY ANCHOR ROD LOCATIONS, ELEVATIONS, AND CLEARANCES. SEE SHEET SB7 AND SB8 FOR EXISTING ANCHORAGE DETAILS; CONTRACTOR TO VERIFY WITH ASBUILTS.

EXISTING POST ANCHORAGE. CONTRACTOR TO FIELD VERIFY ANCHOR ROD LOCATIONS, ELEVATIONS, AND CLEARANCES. SEE SHEET SB7 AND SB8 FOR EXISTING ANCHORAGE DETAILS; CONTRACTOR TO VERIFY WITH AS-BUILTS.

ELEVATION

SIGN BRIDGE NO. 2 - STA M 120+00.00
THE MAXIMUM ALLOWABLE SIGN AREA ON THIS STRUCTURE SHALL BE 900 SQ. FT.

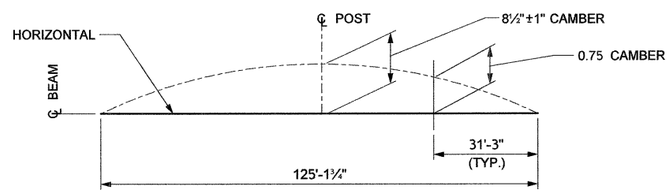

BEAM CAMBER DIAGRAM

* MEASURED ALONG CENTERLINE OF PIER.

** HANDHOLES, NIPPLE LOCATIONS, AND SIGNAL TENONS SHALL BE COORDINATED WITH SIGNALIZATION NEEDS. CONTRACTOR TO VERIFY NIPPLE LOCATIONS TO MATCH SIGNAL LOCATIONS, PRIOR TO SIGN STRUCTURE FABRICATION. NO FIELD WELDING OR DRILLING SHALL BE PERMITTED.

*** HANDHOLE IS ONLY REQUIRED IF NIPPLE LOCATION IS GREATER THAN 1'-6" FROM ANOTHER HAND HOLE LOCATION.

NOTE:

1. SIGN BRIDGE NO. 2 SHALL BE INSTALLED PRIOR TO CASTING THE RAISED TRAFFIC ISLAND BASE. DEPENDING ON THE EXPOSED LENGTH OF EXISTING ANCHOR RODS, THE LEVELING NUTS AND SIGN BRIDGE BASE PLATE MAY BE EMBEDDED IN THE TRAFFIC ISLAND BASE AFTER INSTALLATION AND INSPECTION OF THE SIGN BRIDGE - SEE SPECIAL PROVISIONS. THE CONTRACTOR SHALL FIELD MEASURE THE EXTENSION OF THE EXISTING ANCHOR RODS. BASED ON THESE FIELD MEASUREMENTS, IF THE CONTRACTOR CANNOT INSTALL THE SIGN BRIDGE TO PROVIDE A 3 INCH MAXIMUM OPEN GAP BETWEEN THE TOP OF THE TRAFFIC ISLAND BASE AND THE BOTTOM OF THE SIGN BRIDGE BASE PLATE, THE CONTRACTOR SHALL ENCASE THE ANCHORAGE WITH A CONCRETE PEDESTAL IN ACCORDANCE WITH THE DETAILS ON SHEET SB8.

FILE NAME	U:\PSO\Projects\Clients\1598-TulalipTribes\554-1598-095 116th-Ph4-PSE\99Svcs\CADD\DGN\Bridge\BL 1598033_BG_MTS_1.dgn						
TIME	10:14:56 AM				REGION NO.	STATE	FED.AID PROJ.NO.
DATE	8/30/2017				10	WASH	
PLOTTED BY	purgabut				JOB NUMBER		
DESIGNED BY	B. ROGERS						
ENTERED BY	A. VALENCIA						
CHECKED BY	J. MERTH				CONTRACT NO.		LOCATION NO.
APPROVED BY	H. LONGFELLOW						
REGIONAL ADM.		REVISION	DATE	BY			

P.E. STAMP BOX — DATE

JOSEPH R. MERTH, STATE OF WASHINGTON, 33224, REGISTERED PROFESSIONAL ENGINEER — 8/30/17 DATE — P.E. STAMP BOX

TULALIP TRIBES — Parametrix

I-5 / 116TH STREET NE INTERCHANGE IMPROVEMENTS PHASE 4 RAMPS

SIGN BRIDGE NO. 2 LAYOUT

Plot 2

PLAN REF NO **SB2**

SHEET 194 OF 238 SHEETS

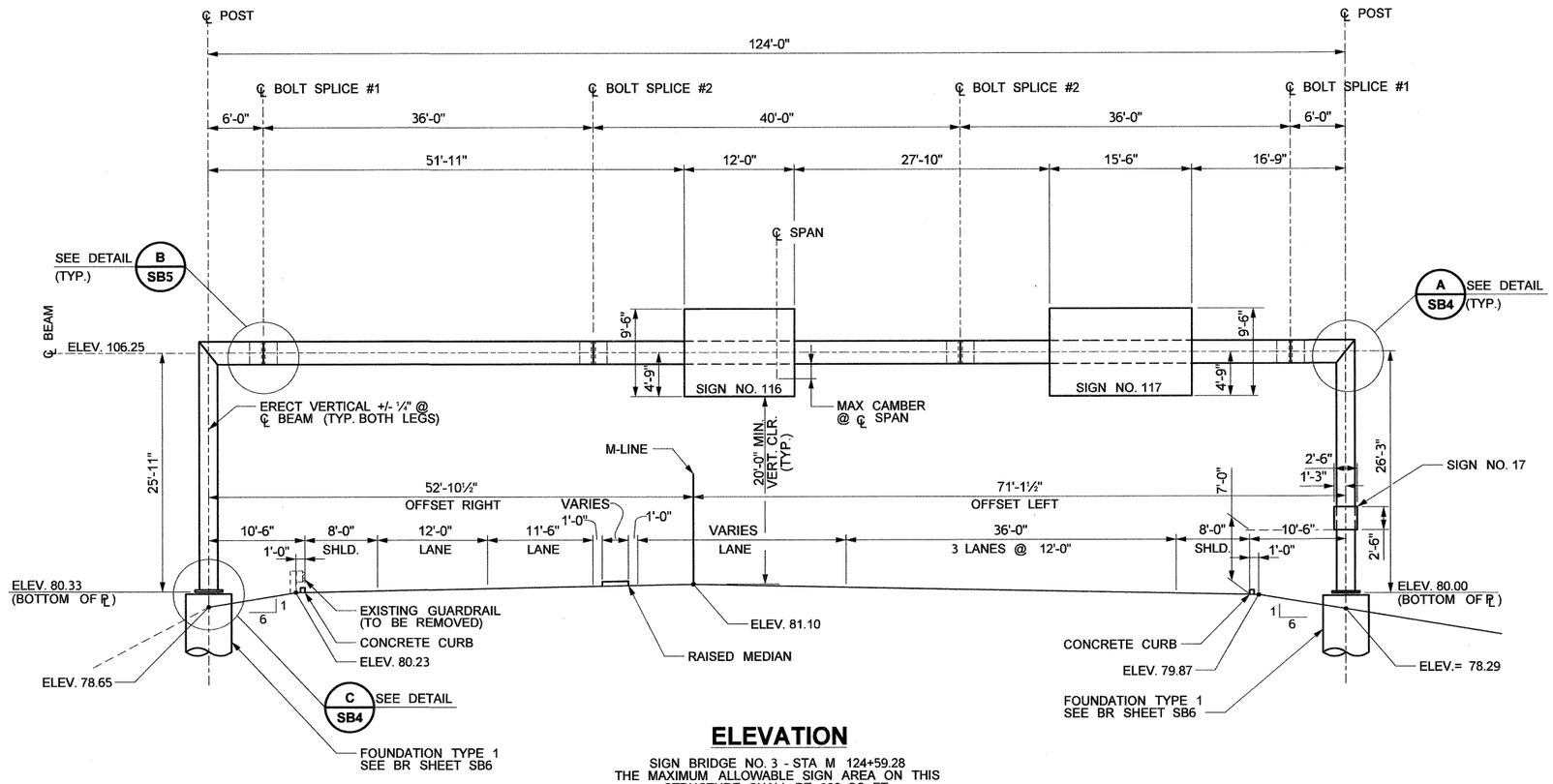

ELEVATION

SIGN BRIDGE NO. 3 - STA M 124+59.28
THE MAXIMUM ALLOWABLE SIGN AREA ON THIS STRUCTURE SHALL BE 900 SQ. FT.

(LOOKING BACK ON STATION)

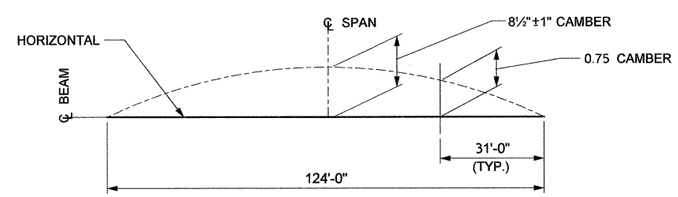

BEAM CAMBER DIAGRAM

FILE NAME	U:\PSO\Projects\Clients\1598-TulalipTribes\554-1598-095 116th-Ph4-PSE\99Svcs\CADD\DGN\Bridge\BL_1598033_BG_MTS_1.dgn
TIME	10:15:25 AM
DATE	8/30/2017
PLOTTED BY	purgabut
DESIGNED BY	B. ROGERS
ENTERED BY	A. VALENCIA
CHECKED BY	J. MERTH
APPROVED BY	H. LONGFELLOW
REGIONAL ADM.	

REVISION	DATE	BY

REGION NO.	STATE	FED.AID PROJ.NO.
10	WASH	
JOB NUMBER		
CONTRACT NO.		LOCATION NO.

P.E. STAMP BOX — DATE

JOSEPH R. MERTH — STATE OF WASHINGTON — 33224 — REGISTERED PROFESSIONAL ENGINEER

P.E. STAMP BOX — 8/30/17 DATE

TULALIP TRIBES — Parametrix

I-5 / 116TH STREET NE
INTERCHANGE IMPROVEMENTS
PHASE 4 RAMPS

SIGN BRIDGE NO. 3
LAYOUT

Plot 3

PLAN REF NO SB3

SHEET 195 OF 238 SHEETS

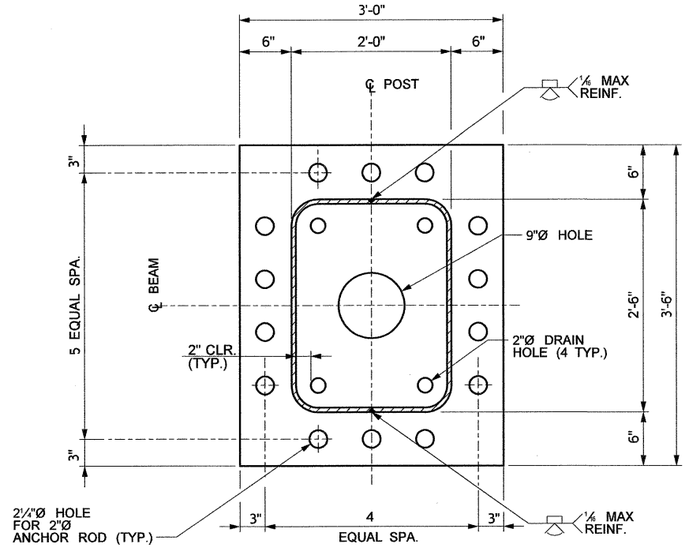

SECTION E

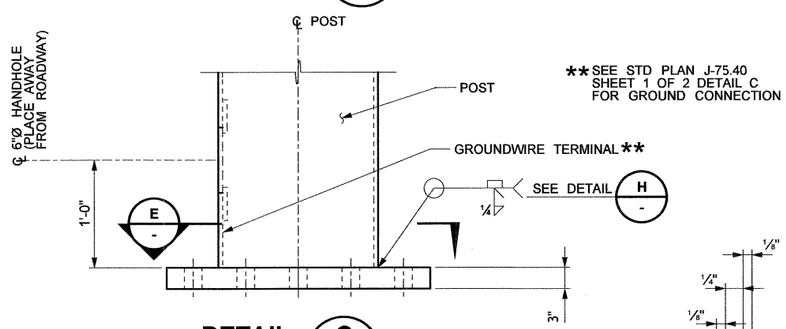

**SEE STD PLAN J-75.40 SHEET 1 OF 2 DETAIL C FOR GROUND CONNECTION

DETAIL C
POST BASE
SB1, 2, & 3

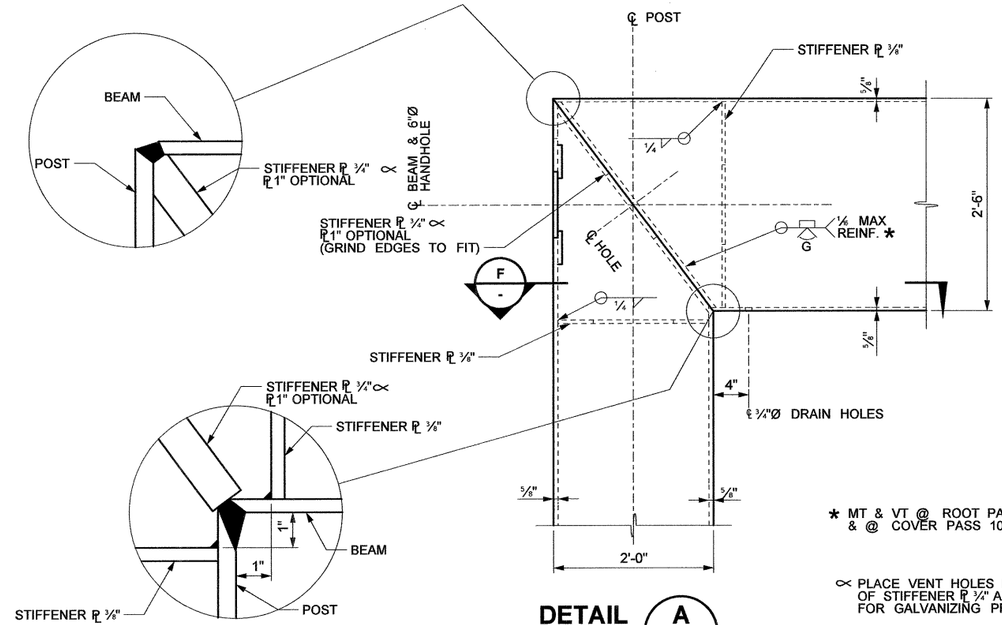

* MT & VT @ ROOT PASS 100% & @ COVER PASS 100%

∝ PLACE VENT HOLES IN CORNERS OF STIFFENER PL ¾" AS REQUIRED FOR GALVANIZING PROCESS

DETAIL A
SB1,2 & 3

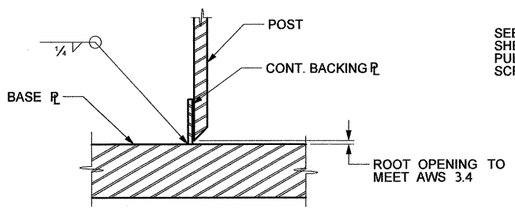

DETAIL H

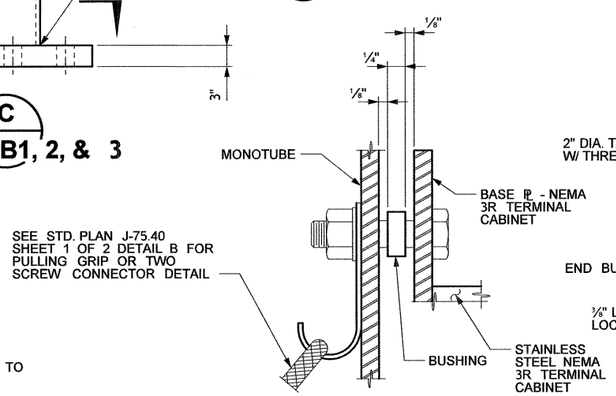

DETAIL G

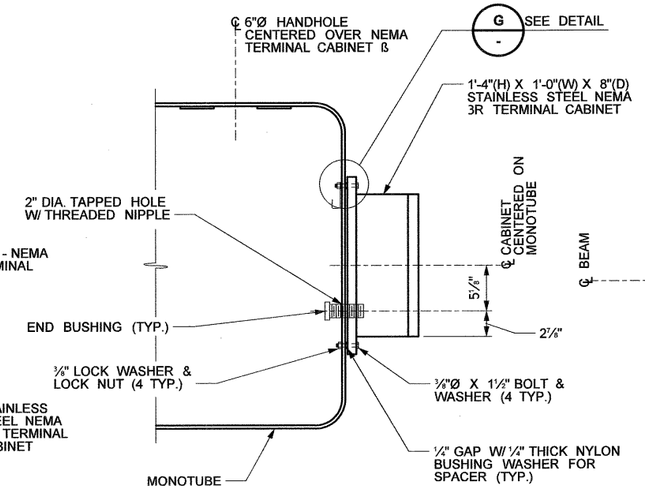

NEMA 3R TERMINAL CABINET DETAIL

ß IF NO OTHER HAND HOLE IS WITHIN 1'-6" OF CABINET

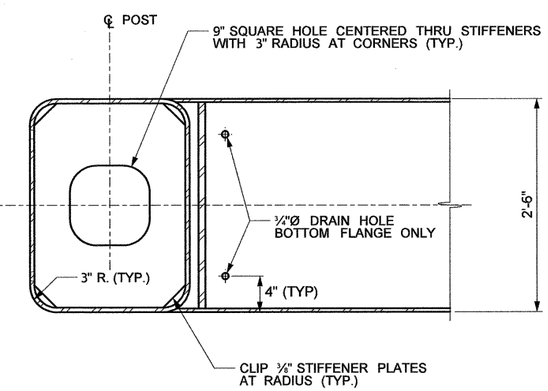

SECTION F
DIAGONAL STIFFENER NOT SHOWN

FILE NAME	U:\PSO\Projects\Clients\1598-TulalipTribes\554-1598-095 116th-Ph4-PSE\99Svcs\CADD\DGN\Bridge\BL 1598033_BG_MTS_1.dgn					
TIME	10:15:39 AM					
DATE	8/30/2017					
PLOTTED BY	purgabut					
DESIGNED BY	B. ROGERS					
ENTERED BY	A. VALENCIA					
CHECKED BY	J. MERTH					
APPROVED BY	H. LONGFELLOW					
REGIONAL ADM.		REVISION	DATE	BY		

REGION NO.	STATE	FED.AID PROJ.NO.
10	WASH	
JOB NUMBER		
CONTRACT NO.		LOCATION NO.

DATE
P.E. STAMP BOX

JOSEPH R. MERTH, STATE OF WASHINGTON, 33224, REGISTERED PROFESSIONAL ENGINEER
8/30/17
DATE
P.E. STAMP BOX

TULALIP TRIBES
Parametrix

I-5 / 116TH STREET NE
INTERCHANGE IMPROVEMENTS
PHASE 4 RAMPS

SIGN BRIDGE STRUCTURAL DETAILS 1 OF 2

Plot 4
PLAN REF NO
SB4
SHEET 196 OF 238 SHEETS

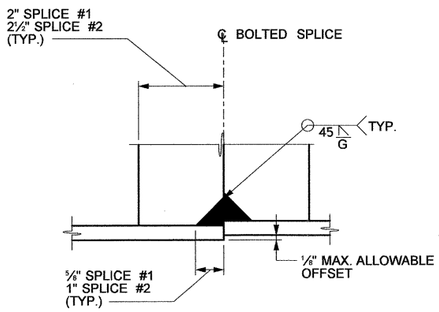

DETAIL P -

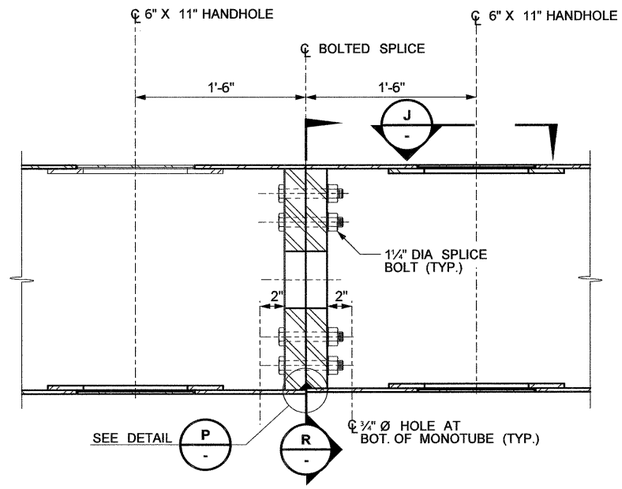

DETAIL B

SB1,2 & 3

SECTION THRU BEAM
BOLTED SPLICE #2 SHOWN.
BOLTED SPLICE #1 SIMILAR.

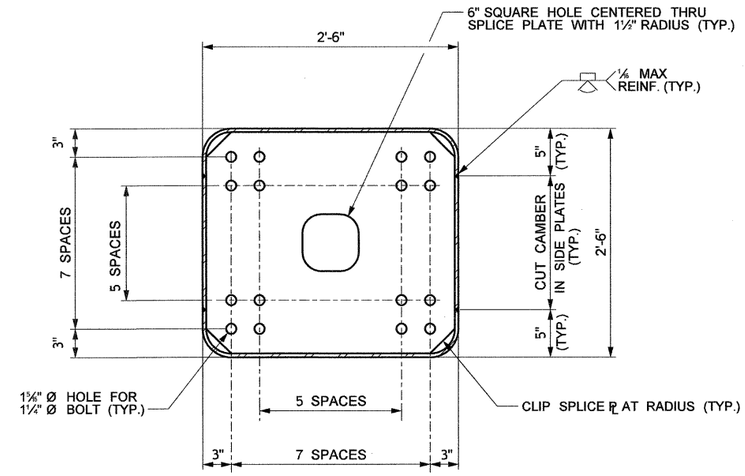

SECTION R -

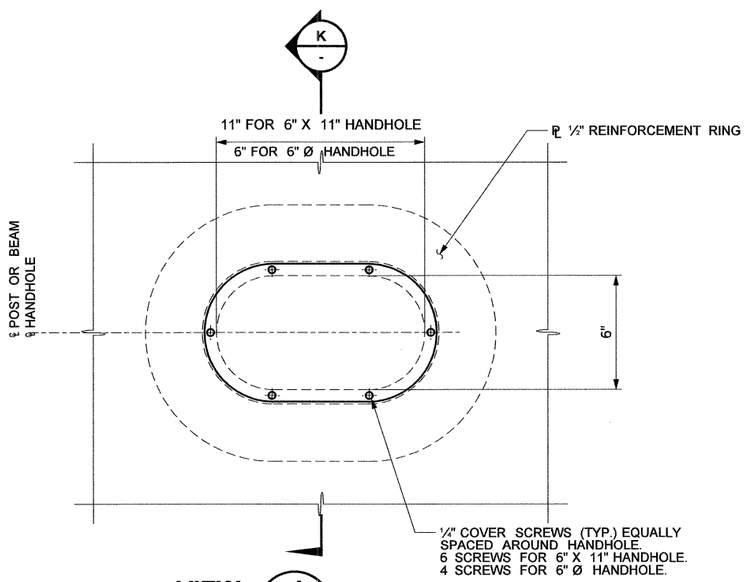

VIEW J -

6"x11" HANDHOLE SHOWN
6"Ø HANDHOLE SIMILAR
EXCEPT AS NOTED

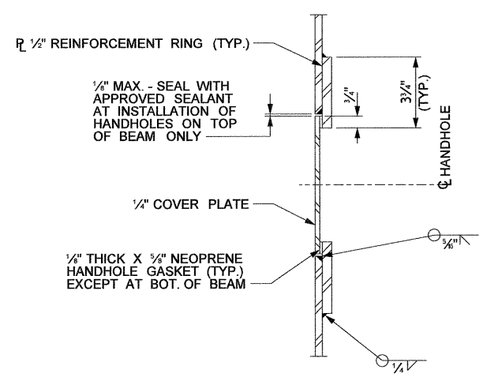

SECTION K -

FILE NAME	U:\PSO\Projects\Clients\1598-TulalipTribes\554-1598-095 116th-Ph4-PSE\99Svcs\CADD\DGN\Bridge\BL 1598033_BG_MTS_1.dgn						
TIME	10:15:54 AM				REGION NO.	STATE	FED.AID PROJ.NO.
DATE	8/30/2017				10	WASH	
PLOTTED BY	purgabut				JOB NUMBER		
DESIGNED BY	B. ROGERS						
ENTERED BY	A. VALENCIA				CONTRACT NO.		LOCATION NO.
CHECKED BY	J. MERTH						
APPROVED BY	H. LONGFELLOW						
REGIONAL ADM.		REVISION	DATE	BY			

DATE
P.E. STAMP BOX

JOSEPH R. MERTH
STATE OF WASHINGTON
33224
REGISTERED PROFESSIONAL ENGINEER
8/30/17
DATE
P.E. STAMP BOX

TULALIP TRIBES
Parametrix

I-5 / 116TH STREET NE
INTERCHANGE IMPROVEMENTS
PHASE 4 RAMPS

SIGN BRIDGE STRUCTURAL
DETAILS 2 OF 2

Plot 5
PLAN REF NO
SB5
SHEET
197
OF
238
SHEETS

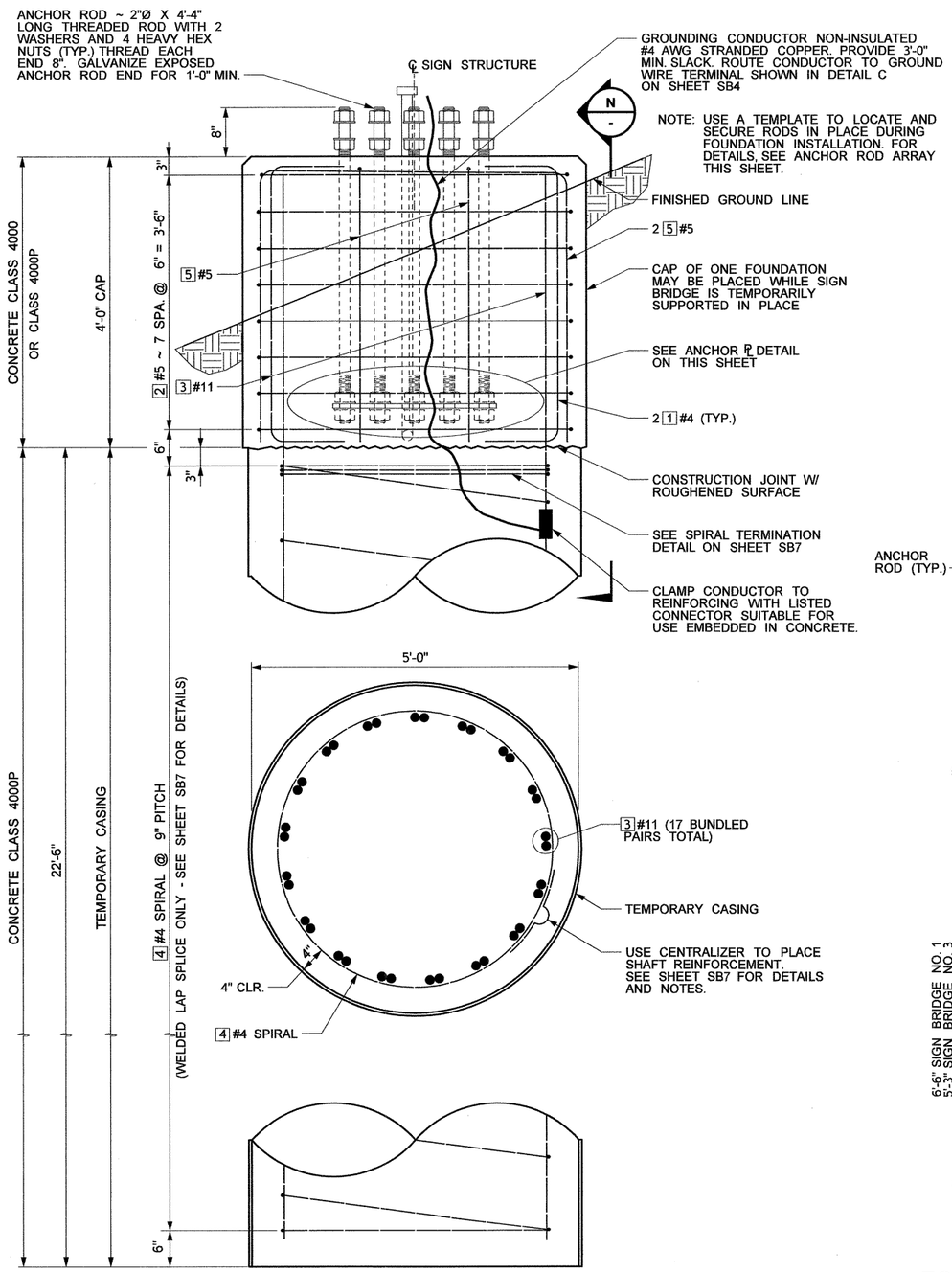

ELEVATION

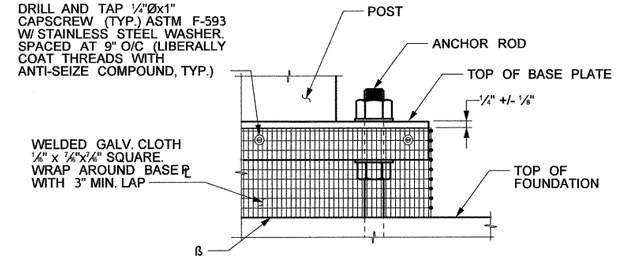

SCREEN DETAIL

ß BOTTOM OF SCREEN TO BE IN FULL CONTACT WITH TOP OF FOUNDATION. MAY OVERSIZE HEIGHT AND TRIM BOTTOM OF SCREEN TO FIT TOP OF FOUNDATION AS NEEDED TO BE IN FULL CONTACT.

BENDING DIAGRAM

MARK	LOCATION	SIZE	NO. REQ'D.	LENGTH	
1	CAP VERTICAL	4	4	5'-6½"	
2	CAP HOOPS	5	8	26'-3" *	
				21'-3" **	
3	SHAFT VERTICAL	11	34	25'-6"	STR.
4	SHAFT SPIRAL	4	1	397'-8"	
5	CAP TOP	5	4	12'-10" *	
				11'-7" **	

NOTE: CONCRETE COVER SHALL BE 1½" UNLESS SHOWN OTHERWISE.

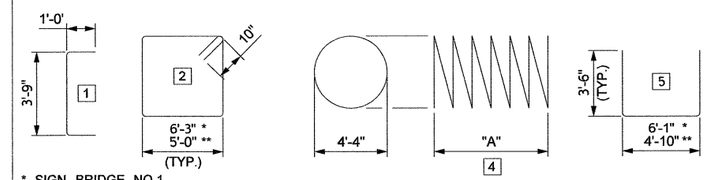

* SIGN BRIDGE NO.1
** SIGN BRIDGE NO. 3

SHAFT DEPTH IS BASED ON ALLOWABLE LATERAL BEARING PRESSURE OF 2500 PSF OR MORE.

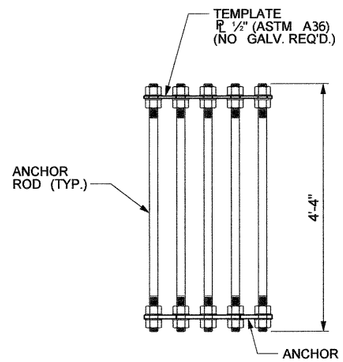

ANCHOR ROD ARRAY

SHIP THE ANCHOR ROD ARRAY ASSEMBLY AS A COMPLETE UNIT.

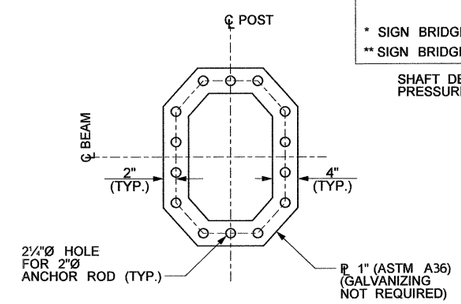

ANCHOR ℙ DETAIL

SEE SIGN STRUCTURE BASE PLATE FOR ANCHOR ROD PATTERN

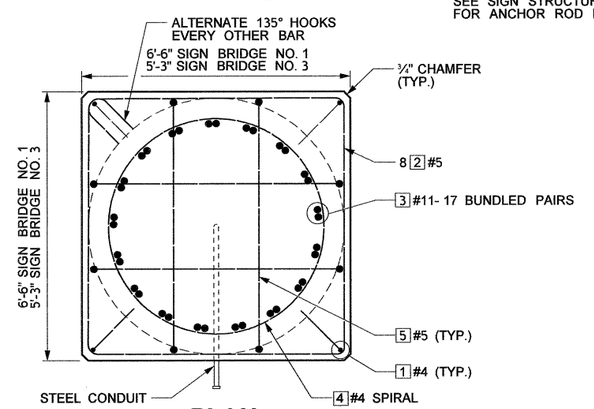

PLAN

ANCHOR RODS NOT SHOWN
SIGN BRIDGE NO. 3 FOUNDATION SHOWN
SIGN BRIDGE NO. 1 FOUNDATION SIMILAR

FOUNDATION TYPE 1 - DETAILS

AT SIGN BRIDGES NO. 1 & 3

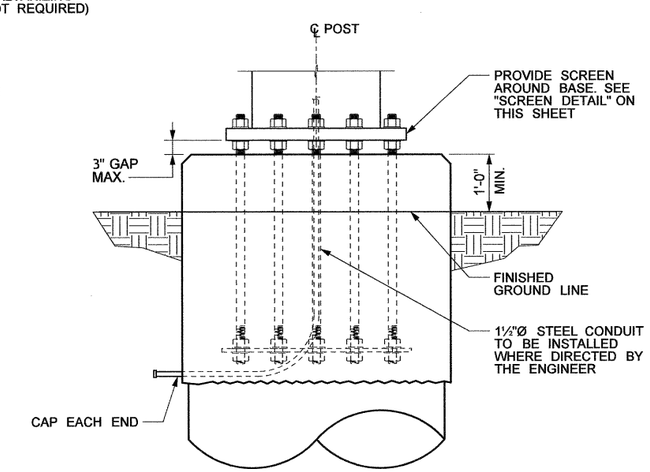

VIEW N -

FILE NAME	U:\PSO\Projects\Clients\1598-TulalipTribes\554-1598-095 116th-Ph4-PSE\99Svcs\CADD\DGN\Bridge\BL_1598033_BG_MTS_1.dgn						
TIME	10:16:08 AM				REGION NO. 10	STATE WASH	FED.AID PROJ.NO.
DATE	8/30/2017				JOB NUMBER		
PLOTTED BY	purgabut						
DESIGNED BY	B. ROGERS				CONTRACT NO.		LOCATION NO.
ENTERED BY	A. VALENCIA						
CHECKED BY	J. MERTH						
APPROVED BY	H. LONGFELLOW						
REGIONAL ADM.		REVISION	DATE	BY			

P.E. STAMP BOX — DATE

JOSEPH R. MERTH — STATE OF WASHINGTON — 33224 — REGISTERED PROFESSIONAL ENGINEER — 8/30/17

P.E. STAMP BOX — DATE

TULALIP TRIBES — Parametrix

I-5 / 116TH STREET NE
INTERCHANGE IMPROVEMENTS
PHASE 4 RAMPS

SIGN STRUCTURES
FOUNDATIONS - SHEET 1 OF 3

Plot 6
PLAN REF NO SB6
SHEET 198 OF 238 SHEETS

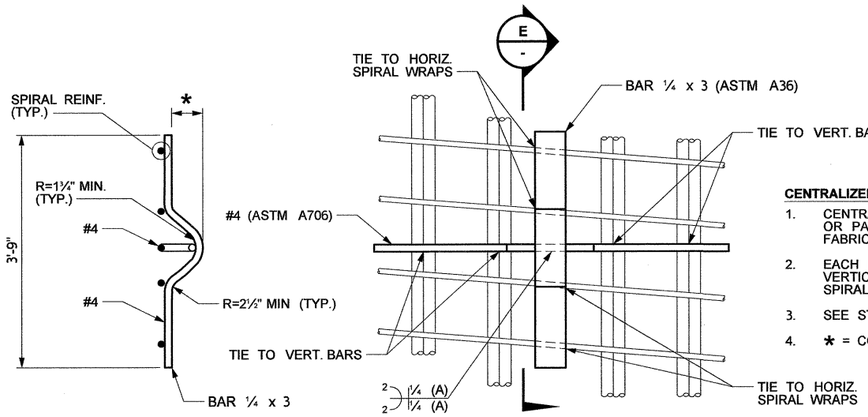

VIEW E/-

CENTRALIZER DETAIL

CENTRALIZER DETAIL NOTES:

1. CENTRALIZERS SHALL BE EPOXY COATED OR PAINTED WITH INORGANIC ZINC AFTER FABRICATION.
2. EACH LEG SHALL BE TIED TO TWO VERTICAL BAR BUNDLES AND TWO SPIRAL WRAPS.
3. SEE STD. SPEC. 6-19.3(5)B FOR SPACING.
4. * = CONCRETE COVER MINUS ½"

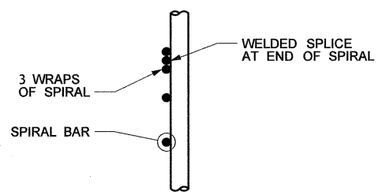

SPIRAL TERMINATION DETAIL

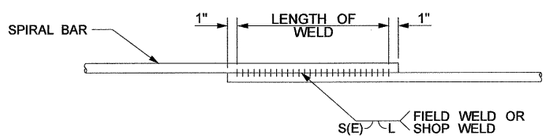

WELDED LAP SPLICE DETAIL

WELDING SHALL MEET THE REQUIREMENTS OF STD. SPEC. 6-02.3(24)E
FOR WELD DIMENSIONS, SEE TABLE BELOW

DEFORMED BAR	WELD DIMENSION (IN.)		
	S	E	LENGTH (L)
#4	1/4	1/8	4

FOUNDATION TYPE 1 DETAILS

AT SIGN BRIDGE NO. 1 & 3

CONCRETE REMOVAL NOTES:

1. EQUIPMENT USED TO REMOVE THE CONCRETE SHALL BE LIMITED TO HAND TOOLS AND HAND OPERATED CHIPPING HAMMERS OF THE 15 POUND CLASSIFICATION MAXIMUM OPERATED AT A MAXIMUM ANGLE OF 45-DEGREES MEASURED FROM THE DECK SURFACE TO THE TOOL.
2. REMOVAL METHODS SHALL NOT DAMAGE THE EXISTING ANCHOR RODS AND ASSOCIATED NUTS AND WASHERS.
3. CONCRETE REMOVED SHALL BE CONTAINED, COLLECTED, AND DISPOSED OF IN ACCORDANCE WITH THE STANDARD SPECIFICATIONS SECTION 2-02.3.

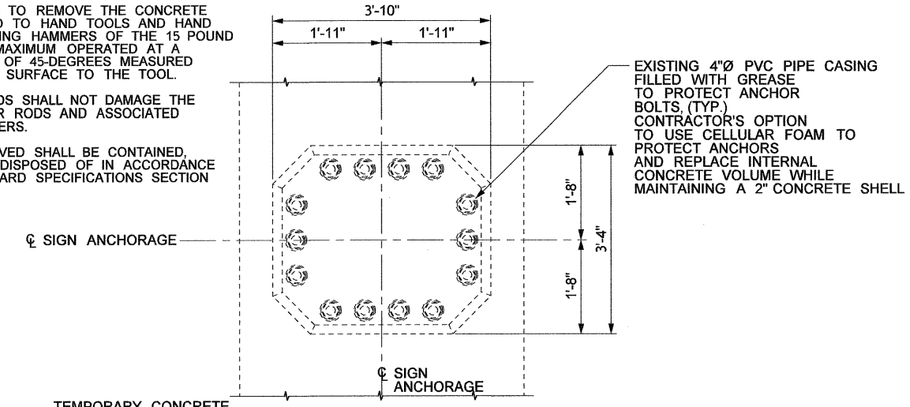

PLAN

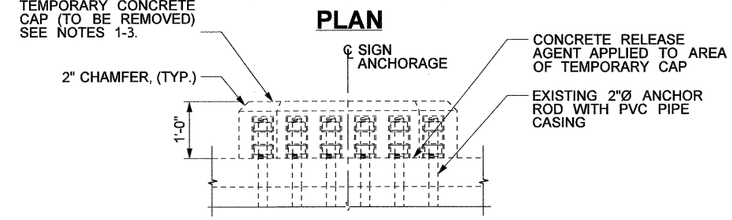

TEMPORARY CONCRETE CAP AT EXISTING SIGN SUPPORT ANCHORAGE

(FOR SIGN BRIDGE NO. 2 ONLY)

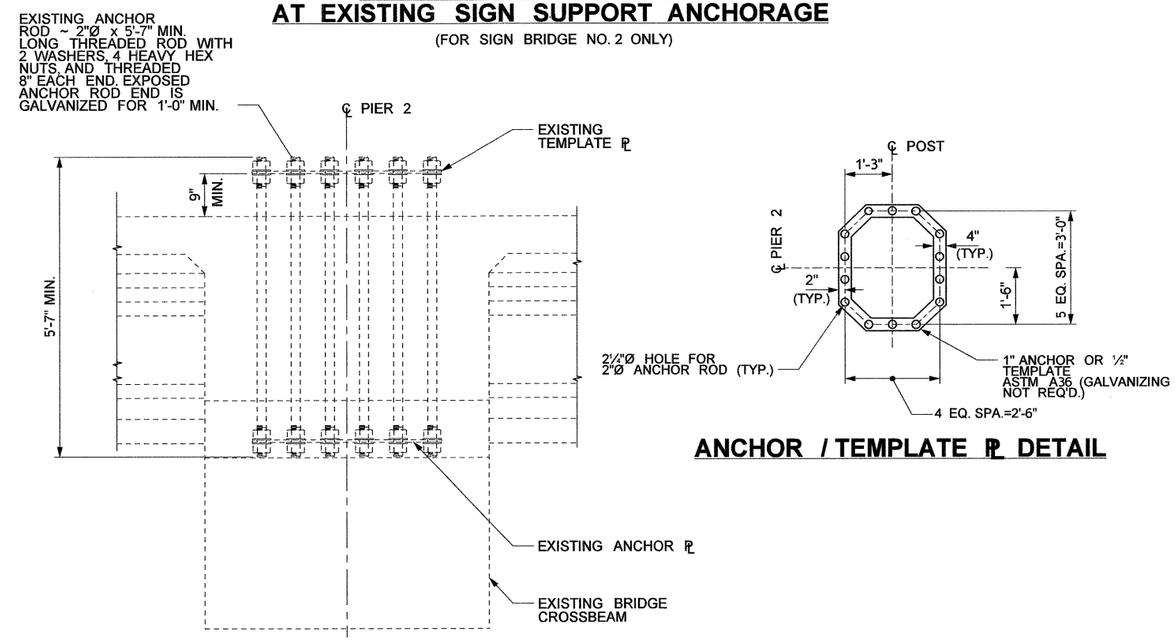

ANCHOR / TEMPLATE PL DETAIL

EXISTING ANCHORAGE DETAILS

AT SIGN BRIDGE NO. 2

FILE NAME	U:\PSO\Projects\Clients\1598-TulalipTribes\554-1598-095 116th-Ph4-PSE\99Svcs\CADD\DGN\Bridge\BL_1598033_BG_MTS_1.dgn					
TIME	10:16:43 AM				REGION NO. 10	STATE WASH	FED.AID PROJ.NO.
DATE	8/30/2017					
PLOTTED BY	purgabut				JOB NUMBER	
DESIGNED BY	B. ROGERS					
ENTERED BY	A. VALENCIA					
CHECKED BY	J. MERTH				CONTRACT NO.	LOCATION NO.
APPROVED BY	H. LONGFELLOW					
REGIONAL ADM.		REVISION	DATE	BY		

P.E. STAMP BOX — DATE

JOSEPH R. MERTH, STATE OF WASHINGTON, 33224, REGISTERED PROFESSIONAL ENGINEER — DATE — P.E. STAMP BOX

TULALIP TRIBES — Parametrix

I-5 / 116TH STREET NE
INTERCHANGE IMPROVEMENTS
PHASE 4 RAMPS

SIGN STRUCTURES
FOUNDATIONS - SHEET 2 OF 3

Plot 7
PLAN REF NO SB7
SHEET 199 OF 238 SHEETS

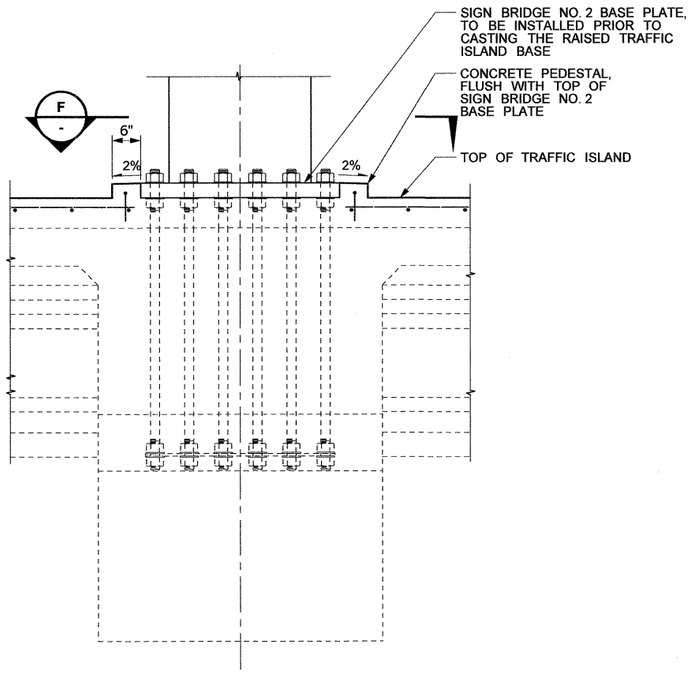

NOTE:

1. IF THE CONCRETE PEDESTAL IS REQUIRED IN ACCORDANCE WITH NOTE 1 OF SHEET SB2, THE CONCRETE PEDESTAL AND TRAFFIC ISLAND ADJACENT TO THE SIGN BRIDGE BASE SHALL NOT BE CONSTRUCTED UNTIL THE ENGINEER HAS INSPECTED AND ACCEPTED THE LEVELING NUTS AND SIGN BRIDGE BASE PLATE - SEE SPECIAL PROVISIONS.

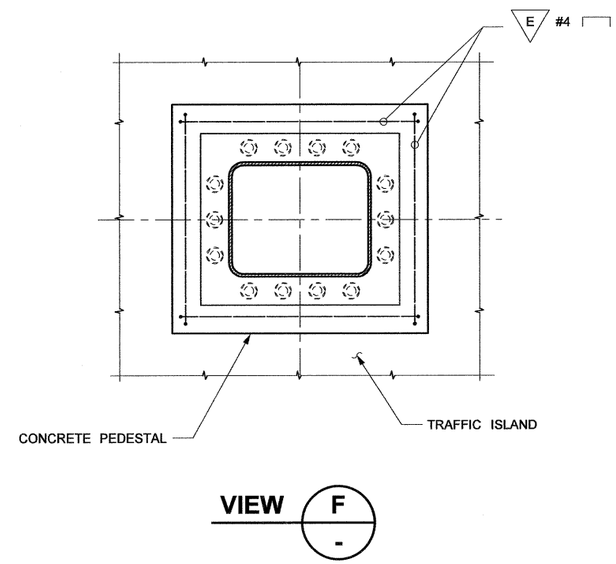

ANCHORAGE DETAILS - CONCRETE PEDESTAL

AT SIGN BRIDGE NO. 2

AT SIGN BRIDGE NO. 2

FILE NAME	U:\PSO\Projects\Clients\1598-TulalipTribes\554-1598-095 116th-Ph4-PSE\99Svcs\CADD\DGN\Bridge\BL 1598033_BG_MTS_1.dgn				REGION NO.	STATE	FED.AID PROJ.NO.
TIME	10:16:57 AM				10	WASH	
DATE	8/30/2017				JOB NUMBER		
PLOTTED BY	purgabut						
DESIGNED BY	B. ROGERS				CONTRACT NO.		LOCATION NO.
ENTERED BY	A. VALENCIA						
CHECKED BY	J. MERTH						
APPROVED BY	H. LONGFELLOW						
REGIONAL ADM.		REVISION	DATE	BY			

P.E. STAMP BOX — DATE

JOSEPH R. MERTZ — STATE OF WASHINGTON — 33224 — REGISTERED PROFESSIONAL ENGINEER

P.E. STAMP BOX — DATE

TULALIP TRIBES — Parametrix

I-5 / 116TH STREET NE
INTERCHANGE IMPROVEMENTS
PHASE 4 RAMPS

SIGN STRUCTURES
FOUNDATIONS - SHEET 3 OF 3

Plot 7

PLAN REF NO
SB8

SHEET 200 OF 238 SHEETS

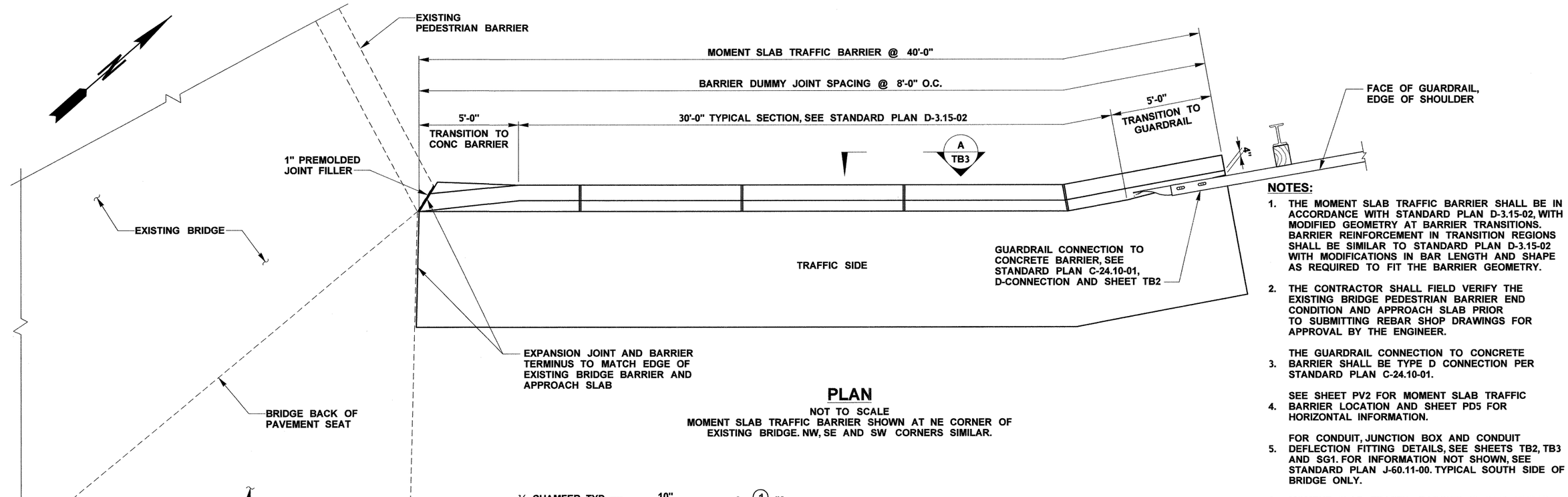

PLAN

NOT TO SCALE
MOMENT SLAB TRAFFIC BARRIER SHOWN AT NE CORNER OF EXISTING BRIDGE. NW, SE AND SW CORNERS SIMILAR.

NOTES:

1. THE MOMENT SLAB TRAFFIC BARRIER SHALL BE IN ACCORDANCE WITH STANDARD PLAN D-3.15-02, WITH MODIFIED GEOMETRY AT BARRIER TRANSITIONS. BARRIER REINFORCEMENT IN TRANSITION REGIONS SHALL BE SIMILAR TO STANDARD PLAN D-3.15-02 WITH MODIFICATIONS IN BAR LENGTH AND SHAPE AS REQUIRED TO FIT THE BARRIER GEOMETRY.
2. THE CONTRACTOR SHALL FIELD VERIFY THE EXISTING BRIDGE PEDESTRIAN BARRIER END CONDITION AND APPROACH SLAB PRIOR TO SUBMITTING REBAR SHOP DRAWINGS FOR APPROVAL BY THE ENGINEER.
3. THE GUARDRAIL CONNECTION TO CONCRETE BARRIER SHALL BE TYPE D CONNECTION PER STANDARD PLAN C-24.10-01.
4. SEE SHEET PV2 FOR MOMENT SLAB TRAFFIC BARRIER LOCATION AND SHEET PD5 FOR HORIZONTAL INFORMATION.
5. FOR CONDUIT, JUNCTION BOX AND CONDUIT DEFLECTION FITTING DETAILS, SEE SHEETS TB2, TB3 AND SG1. FOR INFORMATION NOT SHOWN, SEE STANDARD PLAN J-60.11-00. TYPICAL SOUTH SIDE OF BRIDGE ONLY.
6. MOMENT SLAB TRAFFIC BARRIER IS PAID UNDER WSDOT STD. ITEM GEOSYNTHETIC WALL SINGLE SLOPE TRAFFIC BARRIER.

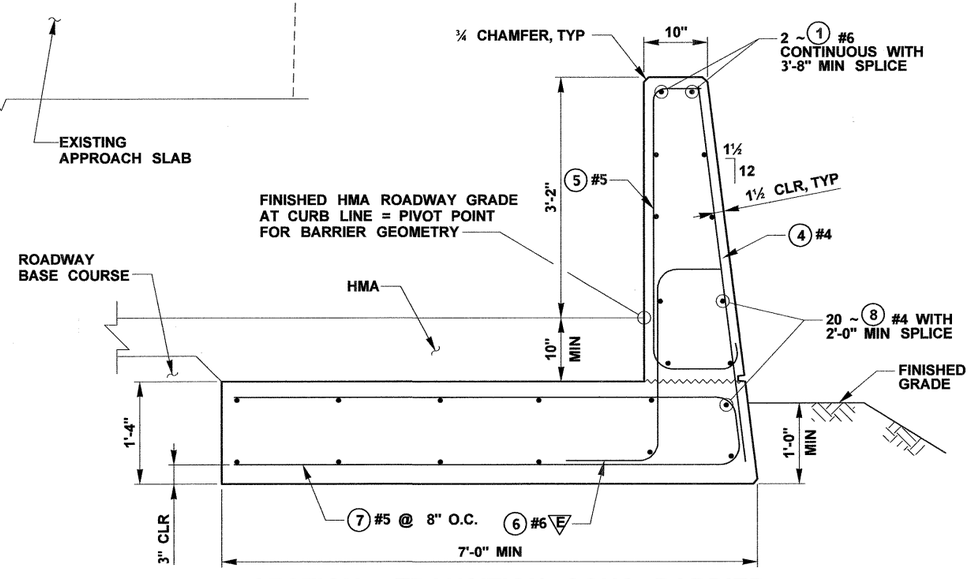

SECTION - TRANSITION CONC BARRIER

NOT TO SCALE
SECTION TAKEN AT BEGINNING OF TRANSITION
(SHAPE SIMILAR TO EXISTING PEDESTRIAN BARRIER)

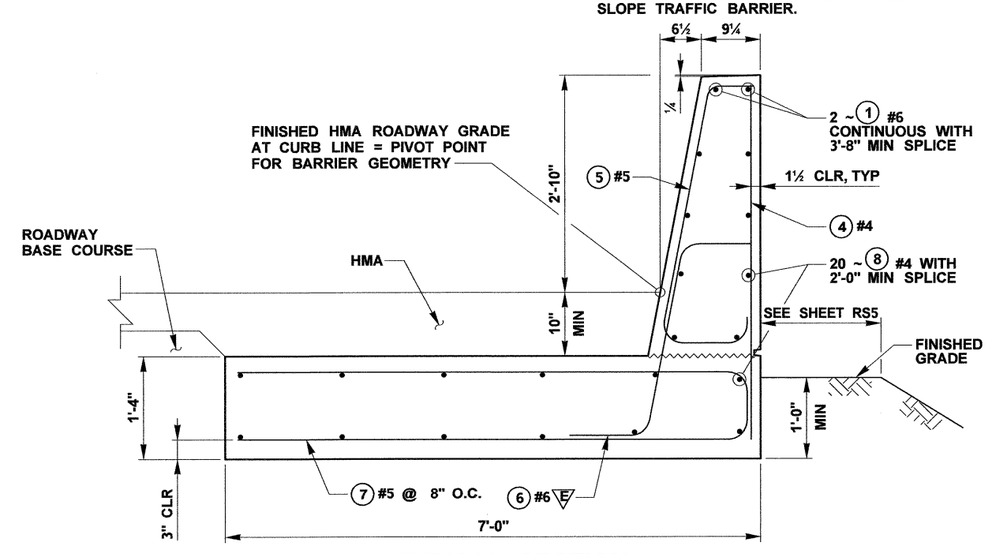

TYPICAL SECTION

NOT TO SCALE

FILE NAME	U:\PSO\Projects\Clients\1598-TulalipTribes\554-1598-095 116th-Ph4-PSE\99Svcs\CADD\DGN\PS&ESheets\BL1598033_DE_TB.dgn
TIME	9:39:14 AM
DATE	8/30/2017
PLOTTED BY	purgabut
DESIGNED BY	B. ROGERS
ENTERED BY	B. PURGANAN
CHECKED BY	J. MERTH
APPROVED BY	H. LONGFELLOW

REVISION	DATE	BY

REGION NO.	STATE	FED.AID PROJ.NO.
10	WASH	
JOB NUMBER		
CONTRACT NO.		LOCATION NO.

P.E. STAMP BOX — DATE

JOSEPH R. MERTH — STATE OF WASHINGTON — 33224 — REGISTERED PROFESSIONAL ENGINEER

P.E. STAMP BOX — DATE 8/30/17

TULALIP TRIBES — Parametrix

I-5 / 116TH STREET NE INTERCHANGE IMPROVEMENTS PHASE 4 RAMPS

MOMENT SLAB TRAFFIC BARRIER

Plot 1

PLAN REF NO TB1

SHEET 201 OF 238 SHEETS

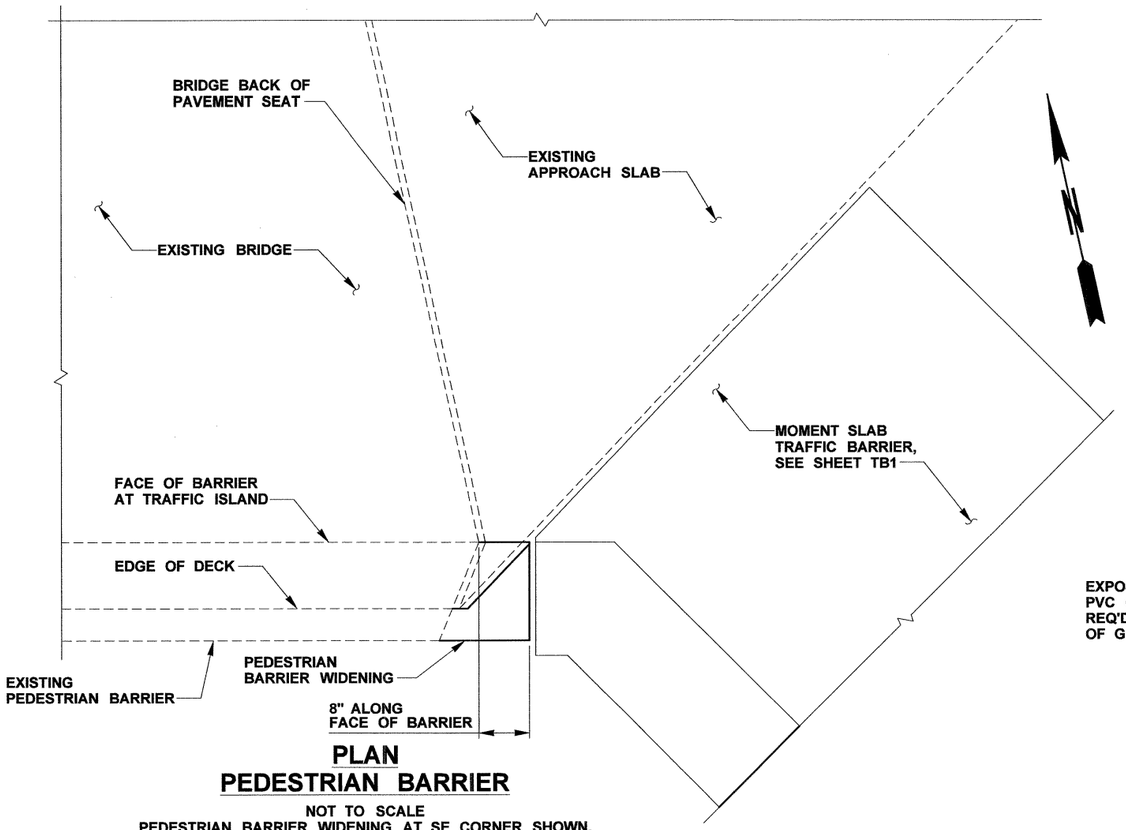

PLAN
PEDESTRIAN BARRIER

NOT TO SCALE
PEDESTRIAN BARRIER WIDENING AT SE CORNER SHOWN.
SW CORNER SIMILAR.

NOTES:

1. ALL CAST-IN-PLACE CONCRETE SHALL BE CLASS 4000.
2. UNLESS OTHERWISE SHOWN ON THE PLANS, CONCRETE COVER MEASURED FROM THE FACE OF CONCRETE TO THE FACE OF ANY REINFORCING STEEL SHALL BE 1½".
3. THE CONTRACTOR SHALL FIELD VERIFY EXISTING PEDESTRIAN BARRIER GEOMETRY AND END CONDITIONS PRIOR TO PERFORMING THE WORK ASSOCIATED WITH WIDENING THE EXISTING BARRIER. THE CONTRACTOR SHALL SUBMIT REVISIONS TO THE PEDESTRIAN BARRIER, IF MODIFIED FROM WHAT IS SHOWN IN THE PLANS, AS A TYPE 1 WORKING DRAWING.
4. THE MAIN REINFORCING BARS AND PVC PIPE IN THE ENDS OF THE EXISTING PEDESTRIAN BARRIER SHALL BE EXPOSED BY CHIPPING PRIOR TO WIDENING. EQUIPMENT USED TO REMOVE THE CONCRETE SHALL BE LIMITED TO HAND TOOLS AND HAND OPERATED CHIPPING HAMMERS OF THE 15 POUND CLASSIFICATION MAXIMUM OPERATED AT A MAXIMUM ANGLE OF 45 DEGREES MEASURED FROM THE VERTICAL SURFACE TO THE TOOL. REMOVAL METHODS SHALL NOT DAMAGE THE EXISTING REINFORCEMENT. CONCRETE REMOVED SHALL BE CONTAINED, COLLECTED AND DISPOSED OF IN ACCORDANCE WITH STANDARD SPECIFICATIONS SECTION 2-02.3.
5. SURFACE PREPARATION OF THE WIDENED BARRIER SHALL INCLUDE ROUGHENING THE END OF THE BARRIER TO A ¼-INCH AMPLITUDE, AND CLEANING ALL CONCRETE SURFACES TO BE FREE OF DUST AND LAITANCE PER THE STANDARD SPECIFICATIONS.
6. FOR CONDUIT, JUNCTION BOX AND DEFLECTION FITTING DETAILS NOT SHOWN ON THIS SHEET, SEE SHEETS TB3, SG1 AND STANDARD PLAN J-60.11-00.

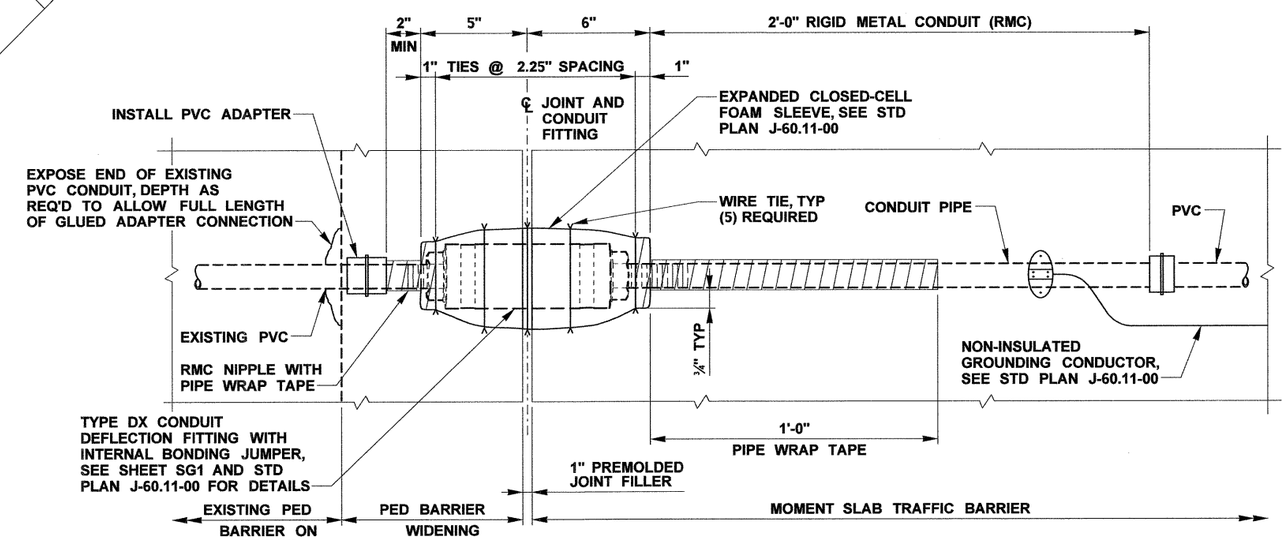

DETAIL - CONDUIT DEFLECTION FITTING

NOT TO SCALE

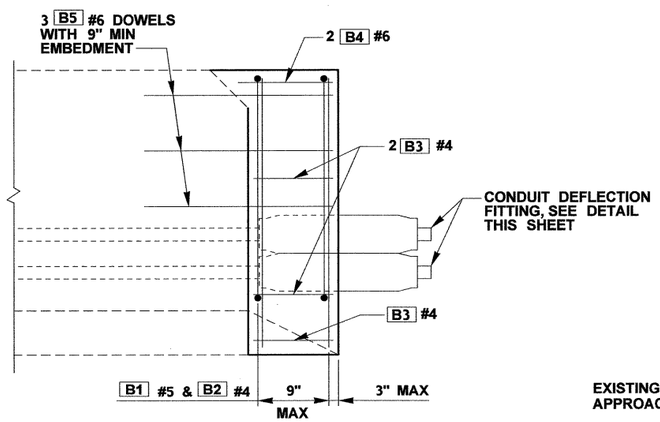

OUTSIDE ELEVATION
PEDESTRIAN BARRIER

NOT TO SCALE

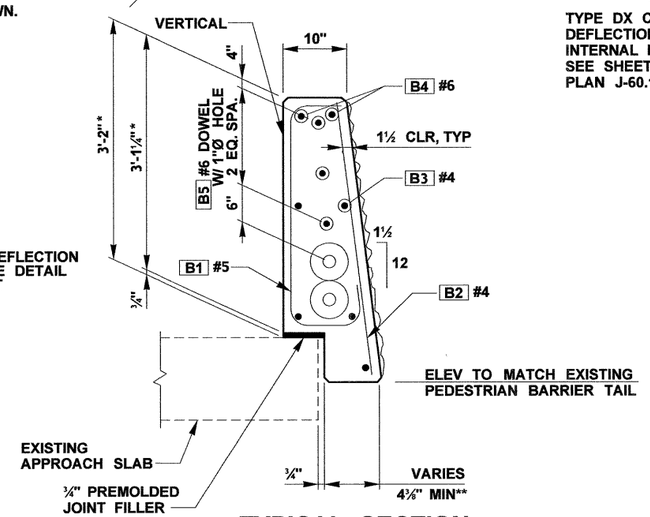

TYPICAL SECTION

NOT TO SCALE

* CONTRACTOR SHALL FIELD VERIFY HEIGHT OF EXISTING PEDESTRIAN BARRIER PRIOR TO REBAR SHOP DRAWING SUBMITTAL. WIDENED BARRIER SHALL MATCH; ADJUST HEIGHT OF B1 #5 AND B2 #4 BARS AS REQUIRED.

** WIDTH OF PEDESTRIAN BARRIER TAIL VARIES. BARRIER TAIL TO MATCH SHAPE OF EXISTING APPROACH SLAB WHERE OVERHANGING. OTHERWISE TAIL SHALL EXTEND TO FACE OF CURB.

BENDING DIAGRAM

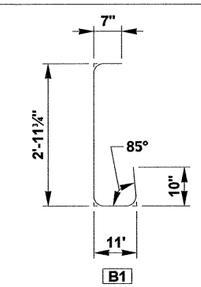

ALL DIMENSIONS ARE OUT TO OUT.

ALL REINFORCING BARS SHOWN ON THIS PLAN SHALL BE ASTM A706, GRADE 60 UNLESS OTHERWISE NOTED.

FILE NAME	U:\PSO\Projects\Clients\1598-TulalipTribes\554-1598-095 116th-Ph4-PSE\99Svcs\CADD\DGN\PS&ESheets\BL1598033_DE_TB.dgn
TIME	9:39:02 AM
DATE	8/30/2017
PLOTTED BY	purgabut
DESIGNED BY	B. ROGERS
ENTERED BY	B. PURGANAN
CHECKED BY	J. MERTH
APPROVED BY	H. LONGFELLOW

REVISION	DATE	BY

REGION NO.	STATE	FED.AID PROJ.NO.
10	WASH	
JOB NUMBER		
CONTRACT NO.		LOCATION NO.

DATE
P.E. STAMP BOX

JOSEPH R. MERTHS — STATE OF WASHINGTON — 33224 — REGISTERED PROFESSIONAL ENGINEER
8/30/17
DATE
P.E. STAMP BOX

TULALIP TRIBES
Parametrix

I-5 / 116TH STREET NE
INTERCHANGE IMPROVEMENTS
PHASE 4 RAMPS

PEDESTRIAN BARRIER

Plot 2
PLAN REF NO
TB2
SHEET 202 OF 238 SHEETS

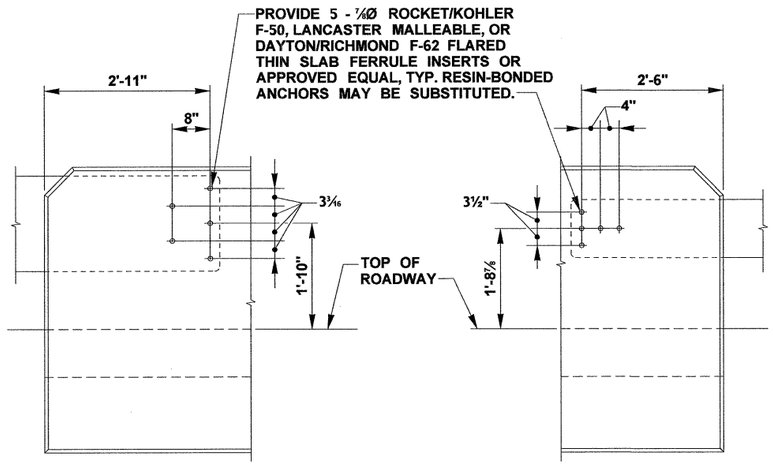

THRIE BEAM END SECTION DESIGN "F"
(SEE STD. PLAN C-7a)

W-BEAM END SECTION DESIGN "F"
(SEE STD. PLAN C-7)

OUTSIDE ELEVATION
TRAFFIC BARRIER - GUARDRAIL CONNECTION

NOT TO SCALE
(WHERE SHOWN ON LAYOUT)

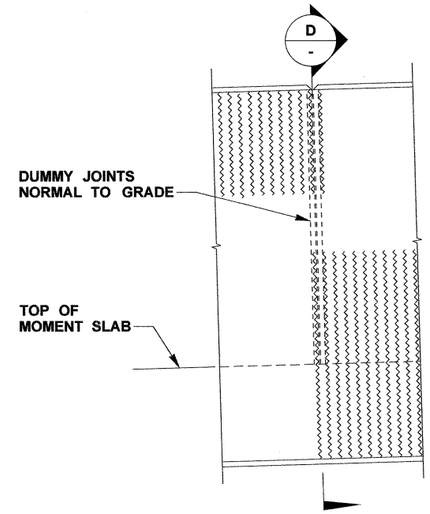

VIEW A/TB1

NOT TO SCALE

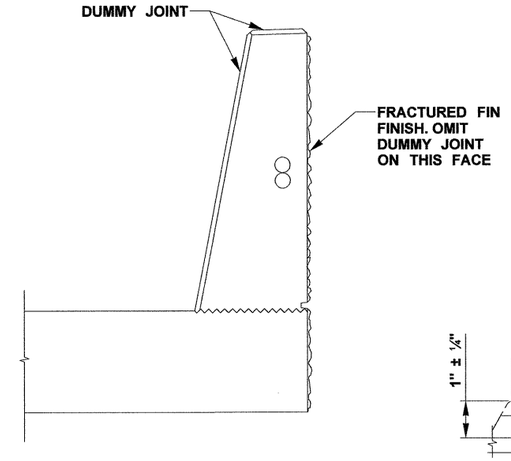

SECTION D/-

NOT TO SCALE

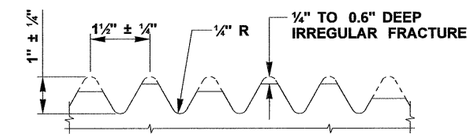

FRACTURED FIN FINISH

NOT TO SCALE

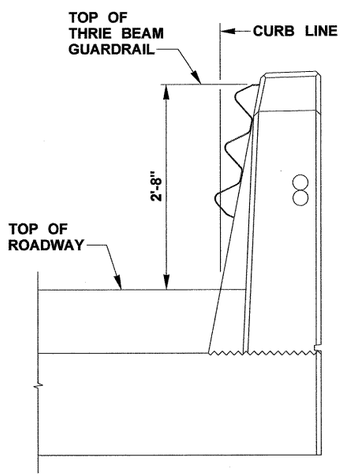

THRIE BEAM SHOWN WITH
"F" CONNECTION
(SEE STD. PLAN C-7a)

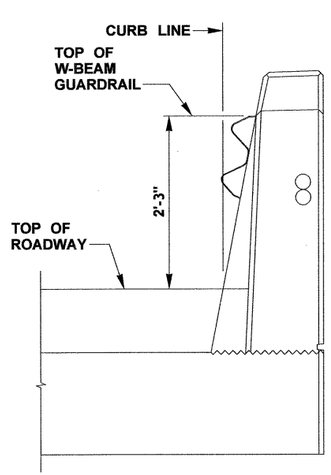

W-BEAM SHOWN WITH
"F" CONNECTION
(SEE STD. PLAN C-7)

END VIEW
TRAFFIC BARRIER - GUARDRAIL CONNECTION

NOT TO SCALE

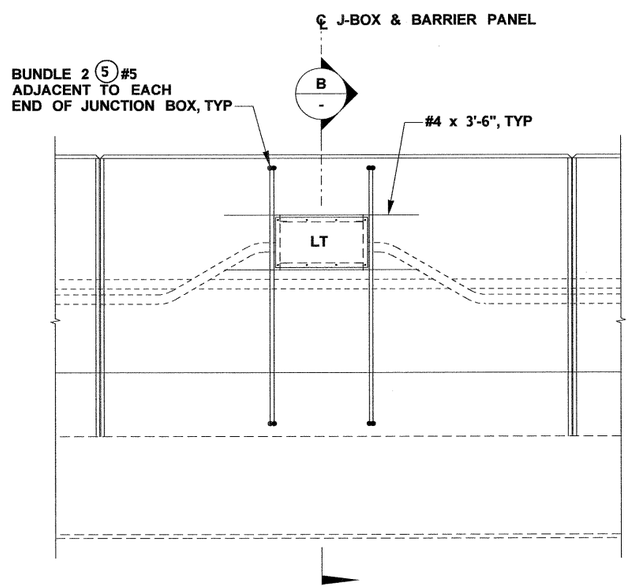

ELEVATION
CONDUITS & J-BOX IN TRAFFIC BARRIER

NOT TO SCALE
APPLICABLE TO BARRIERS AT SE AND SW
CORNERS OF EXISTING BRIDGE, ONLY

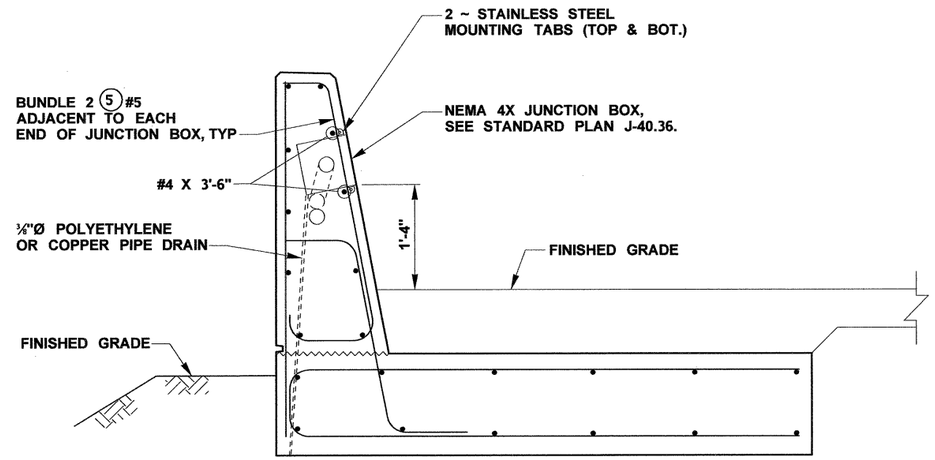

SECTION B/-

NOT TO SCALE

FILE NAME	U:\PSO\Projects\Clients\1598-TulalipTribes\554-1598-095 116th-Ph4-PSE\99Svcs\CADD\DGN\PS&ESheets\BL1598033_DE_TB.dgn				REGION NO.	STATE	FED.AID PROJ.NO.
TIME	9:39:22 AM				10	WASH	
DATE	8/30/2017				JOB NUMBER		
PLOTTED BY	purgabut						
DESIGNED BY	B. ROGERS				CONTRACT NO.		LOCATION NO.
ENTERED BY	B. PURGANAN						
CHECKED BY	J. MERTH						
APPROVED BY	H. LONGFELLOW						
		REVISION	DATE	BY			

P.E. STAMP BOX — DATE

JOSEPH R. MERTH, STATE OF WASHINGTON, 33224, REGISTERED PROFESSIONAL ENGINEER — 8/30/17 DATE — P.E. STAMP BOX

TULALIP TRIBES — Parametrix

I-5 / 116TH STREET NE
INTERCHANGE IMPROVEMENTS
PHASE 4 RAMPS

BARRIER - DETAILS

Plot 3
PLAN REF NO TB3
SHEET 203 OF 238 SHEETS

BUFFER DATA

LONGITUDINAL BUFFER SPACE = B

SPEED (MPH)	25	30	35	40	45	50	55	60	65	70
LENGTH (feet)	155	200	250	305	360	425	495	570	645	730

TRANSPORTABLE ATTENUATOR ROLL AHEAD DISTANCE = R

HOST VEHICLE WEIGHT 9,900 TO 22,000 LBS.			HOST VEHICLE WEIGHT > 22,000 LBS.		
< 45 MPH	45-55 MPH	> 55 MPH	< 45 MPH	45-55 MPH	> 55 MPH
100'	123'	172'	74'	100'	150'

PROTECTIVE VEHICLE (WORK VEHICLE) = R

NO SPECIFIED DISTANCE REQUIRED

MINIMUM LANE CLOSURE TAPER LENGTH = L (feet)

LANE WIDTH (feet)	Posted Speed (mph)									
	25	30	35	40	45	50	55	60	65	70
10	-	-	-	-	-	-	550	-	-	-
11	-	-	-	-	-	-	605	660	-	-
12	-	-	-	-	-	-	660	720	780	840

CHANNELIZATION DEVICE SPACING (feet)		
MPH	TAPER	TANGENT
50/70	40	80

SIGN SPACING = X

FREEWAYS & EXPRESSWAYS	55 / 70 MPH	1500' ± (OR AS PER MUTCD)

(1) ALL SPACING MAY BE ADJUSTED TO ACCOMMODATE INTERCHANGE RAMPS, AT-GRADE INTERSECTIONS AND DRIVEWAYS.
(2) THIS SPACING MAY BE REDUCED IN URBAN AREAS TO FIT ROADWAY CONDITIONS.

NOTES:

1. SEE SPECIAL PROVISIONS FOR CLOSURE HOUR RESTRICTIONS.
2. ALL SIGNS ARE BLACK ON ORANGE UNLESS OTHERWISE DESIGNATED.
3. MINIMUM SHOULDER TAPER RATE = L/3.
4. COVER "TRUCKS LEAVING/ENTERING HIGHWAY" SIGNS DURING NON-WORKING HOURS.
5. NO FLAGGERS OR SPOTTERS ON I-5 OR THE RAMPS.

LEGEND

- TEMPORARY SIGN LOCATION
- TRAFFIC SAFETY DRUM WITH TYPE C WARNING LIGHTS
- SEQUENTIAL ARROW SIGN
- TRANSPORTABLE ATTENUATOR
- PORTABLE CHANGEABLE MESSAGE SIGN
- WORK ZONE
- TYPE 3 BARRICADE
- PROTECTIVE VEHICLE

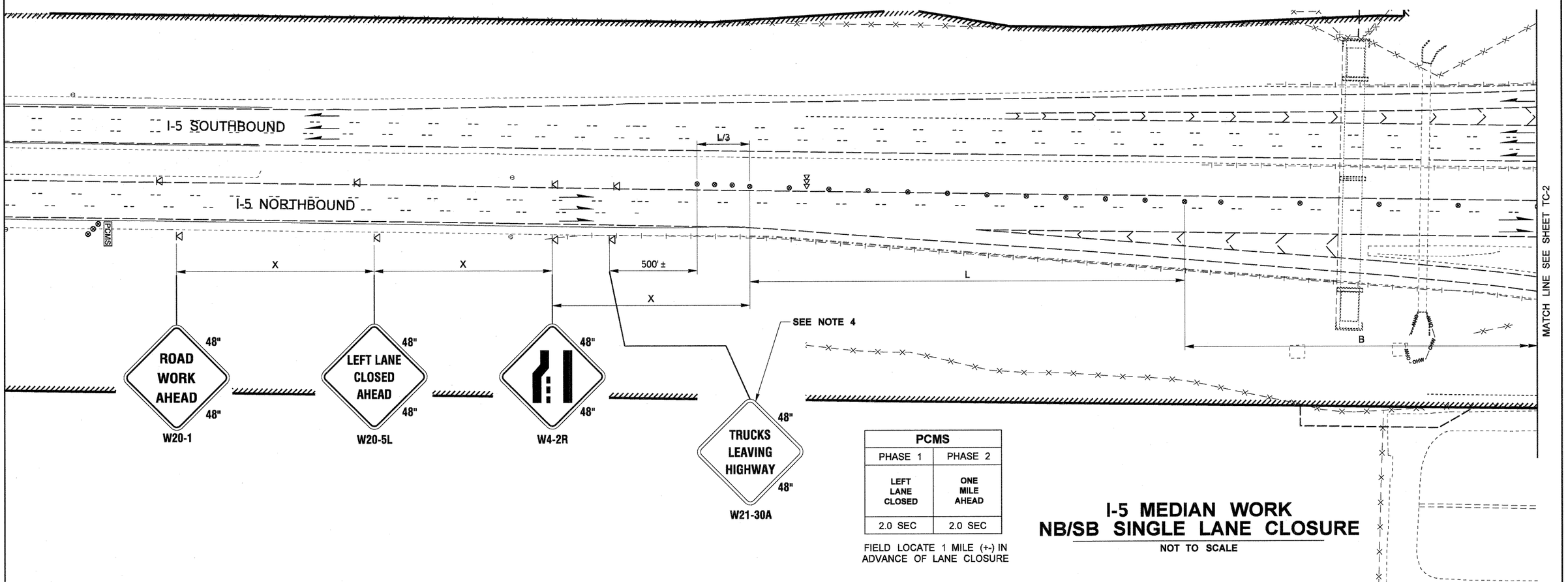

PCMS	
PHASE 1	PHASE 2
LEFT LANE CLOSED	ONE MILE AHEAD
2.0 SEC	2.0 SEC

FIELD LOCATE 1 MILE (+-) IN ADVANCE OF LANE CLOSURE

I-5 MEDIAN WORK NB/SB SINGLE LANE CLOSURE

NOT TO SCALE

FILE NAME	U:\PSO\Projects\Clients\1598-TulalipTribes\554-1598-095 116th-Ph4-PSE\99Svcs\CADD\DGN\PS&ESheets\BL1598033_PS_TC.dgn
TIME	11:57:21 AM
DATE	8/25/2017
PLOTTED BY	purgabut
DESIGNED BY	M. TSUN
ENTERED BY	B. PURGANAN
CHECKED BY	D. PROCTOR
APPROVED BY	H. LONGFELLOW

REVISION	DATE	BY

REGION NO.	STATE	FED.AID PROJ.NO.
10	WASH	
JOB NUMBER		
CONTRACT NO.		LOCATION NO.

P.E. STAMP BOX — DATE

HEATH DAVID LONGFELLOW, STATE OF WASHINGTON, 37802, REGISTERED PROFESSIONAL ENGINEER — DATE — P.E. STAMP BOX

TULALIP TRIBES — Parametrix

I-5 / 116TH STREET NE INTERCHANGE IMPROVEMENTS PHASE 4 RAMPS

TRAFFIC CONTROL PLAN

Plot 1

PLAN REF NO TC1

SHEET 204 OF 238 SHEETS

BUFFER DATA										
LONGITUDINAL BUFFER SPACE = B										
SPEED (MPH)	25	30	35	40	45	50	55	60	65	70
LENGTH (feet)	155	200	250	305	360	425	495	570	645	730

TRANSPORTABLE ATTENUATOR ROLL AHEAD DISTANCE = R					
HOST VEHICLE WEIGHT 9,900 TO 22,000 LBS.			HOST VEHICLE WEIGHT > 22,000 LBS.		
< 45 MPH	45-55 MPH	> 55 MPH	< 45 MPH	45-55 MPH	> 55 MPH
100'	123'	172'	74'	100'	150'

PROTECTIVE VEHICLE (WORK VEHICLE) = R
NO SPECIFIED DISTANCE REQUIRED

MINIMUM LANE CLOSURE TAPER LENGTH = L (feet)										
LANE WIDTH (feet)	Posted Speed (mph)									
	25	30	35	40	45	50	55	60	65	70
10	-	-	-	-	-	-	550	-	-	-
11	-	-	-	-	-	-	605	660	-	-
12	-	-	-	-	-	-	660	720	780	840

CHANNELIZATION DEVICE SPACING (feet)		
MPH	TAPER	TANGENT
50/70	40	80

SIGN SPACING = X		
FREEWAYS & EXPRESSWAYS	55 / 70 MPH	1500' ± (OR AS PER MUTCD)

(1) ALL SPACING MAY BE ADJUSTED TO ACCOMMODATE INTERCHANGE RAMPS, AT-GRADE INTERSECTIONS AND DRIVEWAYS.
(2) THIS SPACING MAY BE REDUCED IN URBAN AREAS TO FIT ROADWAY CONDITIONS.

NOTES:

1. SEE SPECIAL PROVISIONS FOR CLOSURE HOUR RESTRICTIONS.
2. ALL SIGNS ARE BLACK ON ORANGE UNLESS OTHERWISE DESIGNATED.
3. MINIMUM SHOULDER TAPER RATE = L/3.
4. "TRUCKS LEAVING/ENTERING HIGHWAY" SIGNS PRESENT ONLY DURING LANE CLOSURE HOURS WHEN FREQUENT TRUCK MOVEMENTS OCCURING. OTHERWISE, SIGNS ARE NOT TO BE USED.
5. NO FLAGGERS OR SPOTTERS ON I-5 OR THE RAMPS.

LEGEND

- TEMPORARY SIGN LOCATION
- TRAFFIC SAFETY DRUM WITH TYPE C WARNING LIGHTS
- SEQUENTIAL ARROW SIGN
- TRANSPORTABLE ATTENUATOR
- PCMS — PORTABLE CHANGEABLE MESSAGE SIGN
- WORK ZONE
- TYPE 3 BARRICADE
- PROTECTIVE VEHICLE

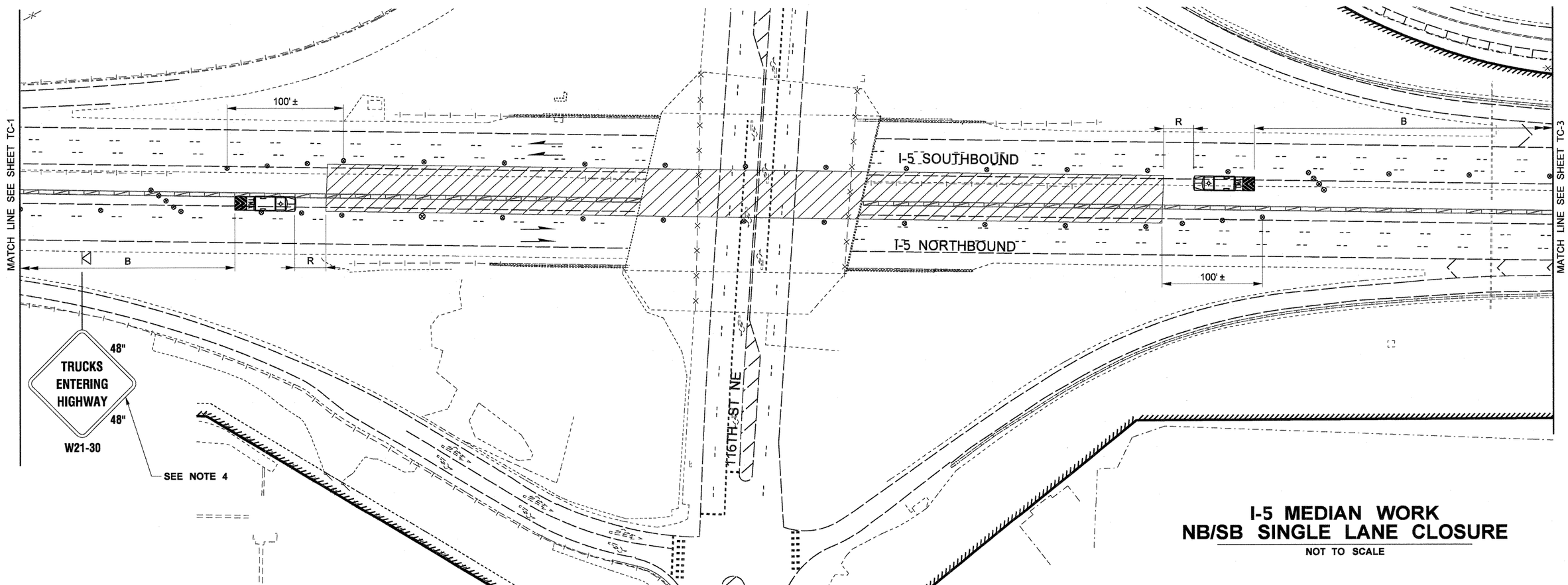

I-5 MEDIAN WORK NB/SB SINGLE LANE CLOSURE

NOT TO SCALE

FILE NAME	U:\PSO\Projects\Clients\1598-TulalipTribes\554-1598-095 116th-Ph4-PSE\99Svcs\CADD\DGN\PS&ESheets\BL1598033_PS_TC.dgn
TIME	11:58:32 AM
DATE	8/25/2017
PLOTTED BY	purgabut
DESIGNED BY	M. TSUN
ENTERED BY	B. PURGANAN
CHECKED BY	D. PROCTOR
APPROVED BY	H. LONGFELLOW

REVISION | DATE | BY

REGION NO. 10 | STATE WASH | FED.AID PROJ.NO.

JOB NUMBER

CONTRACT NO. | LOCATION NO.

P.E. STAMP BOX — DATE

STEPHEN DAVID LONGFELLOW — STATE OF WASHINGTON — 37902 — REGISTERED PROFESSIONAL ENGINEER — 8/25/17

P.E. STAMP BOX — DATE

TULALIP TRIBES — Parametrix

I-5 / 116TH STREET NE
INTERCHANGE IMPROVEMENTS
PHASE 4 RAMPS

TRAFFIC CONTROL PLAN

Plot 2

PLAN REF NO TC2

SHEET 205 OF 238 SHEETS

BUFFER DATA										
LONGITUDINAL BUFFER SPACE = B										
SPEED (MPH)	25	30	35	40	45	50	55	60	65	70
LENGTH (feet)	155	200	250	305	360	425	495	570	645	730

TRANSPORTABLE ATTENUATOR ROLL AHEAD DISTANCE = R					
HOST VEHICLE WEIGHT 9,900 TO 22,000 LBS.			HOST VEHICLE WEIGHT > 22,000 LBS.		
< 45 MPH	45-55 MPH	> 55 MPH	< 45 MPH	45-55 MPH	> 55 MPH
100'	123'	172'	74'	100'	150'

PROTECTIVE VEHICLE (WORK VEHICLE) = R
NO SPECIFIED DISTANCE REQUIRED

MINIMUM LANE CLOSURE TAPER LENGTH = L (feet)										
LANE WIDTH (feet)	Posted Speed (mph)									
	25	30	35	40	45	50	55	60	65	70
10	-	-	-	-	-	-	550	-	-	-
11	-	-	-	-	-	-	605	660	-	-
12	-	-	-	-	-	-	660	720	780	840

CHANNELIZATION DEVICE SPACING (feet)		
MPH	TAPER	TANGENT
50/70	40	80

PCMS	
PHASE 1	PHASE 2
LEFT LANE CLOSED	ONE MILE AHEAD
2.0 SEC	2.0 SEC

FIELD LOCATE 1 MILE (+-) IN ADVANCE OF LANE CLOSURE

SIGN SPACING = X		
FREEWAYS & EXPRESSWAYS	55 / 70 MPH	1500' ± (OR AS PER MUTCD)

(1) ALL SPACING MAY BE ADJUSTED TO ACCOMMODATE INTERCHANGE RAMPS, AT-GRADE INTERSECTIONS AND DRIVEWAYS.
(2) THIS SPACING MAY BE REDUCED IN URBAN AREAS TO FIT ROADWAY CONDITIONS.

NOTES:

1. SEE SPECIAL PROVISIONS FOR CLOSURE HOUR RESTRICTIONS.
2. ALL SIGNS ARE BLACK ON ORANGE UNLESS OTHERWISE DESIGNATED.
3. MINIMUM SHOULDER TAPER RATE = L/3.
4. NO FLAGGERS OR SPOTTERS ON I-5 OR THE RAMPS.

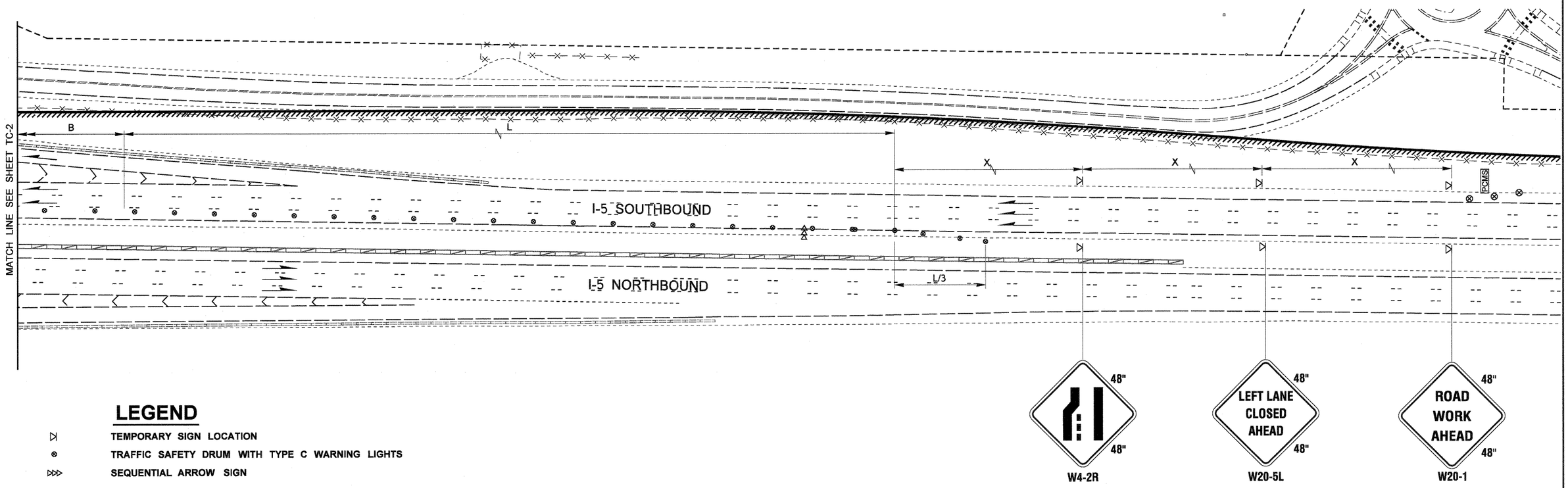

LEGEND

- TEMPORARY SIGN LOCATION
- TRAFFIC SAFETY DRUM WITH TYPE C WARNING LIGHTS
- SEQUENTIAL ARROW SIGN
- TRANSPORTABLE ATTENUATOR
- PCMS — PORTABLE CHANGEABLE MESSAGE SIGN
- WORK ZONE
- TYPE 3 BARRICADE
- PROTECTIVE VEHICLE

I-5 MEDIAN WORK NB/SB SINGLE LANE CLOSURE

NOT TO SCALE

FILE NAME	U:\PSO\Projects\Clients\1598-TulalipTribes\554-1598-095 116th-Ph4-PSE\99Svcs\CADD\DGN\PS&ESheets\BL1598033_PS_TC.dgn
TIME	11:58:45 AM
DATE	8/25/2017
PLOTTED BY	purgabut
DESIGNED BY	M. TSUN
ENTERED BY	B. PURGANAN
CHECKED BY	D. PROCTOR
APPROVED BY	H. LONGFELLOW

REVISION	DATE	BY

REGION NO.	STATE	FED.AID PROJ.NO.
10	WASH	
JOB NUMBER		
CONTRACT NO.		LOCATION NO.

P.E. STAMP BOX — DATE

HAPPY DAVID LONGFELLOW — STATE OF WASHINGTON — 37902 — REGISTERED PROFESSIONAL ENGINEER

P.E. STAMP BOX — DATE

TULALIP TRIBES — Parametrix

I-5 / 116TH STREET NE
INTERCHANGE IMPROVEMENTS
PHASE 4 RAMPS

TRAFFIC CONTROL PLAN

Plot 3

PLAN REF NO TC3

SHEET 206 OF 238 SHEETS

BUFFER DATA

LONGITUDINAL BUFFER SPACE = B

SPEED (MPH)	25	30	35	40	45	50	55	60	65	70
LENGTH (feet)	155	200	250	305	360	425	495	570	645	730

TRANSPORTABLE ATTENUATOR ROLL AHEAD DISTANCE = R

HOST VEHICLE WEIGHT 9,900 TO 22,000 LBS.			HOST VEHICLE WEIGHT > 22,000 LBS.		
< 45 MPH	45-55 MPH	> 55 MPH	< 45 MPH	45-55 MPH	> 55 MPH
100'	123'	172'	74'	100'	150'

PROTECTIVE VEHICLE (WORK VEHICLE) = R

NO SPECIFIED DISTANCE REQUIRED

MINIMUM LANE CLOSURE TAPER LENGTH = L (feet)

LANE WIDTH (feet)	Posted Speed (mph)									
	25	30	35	40	45	50	55	60	65	70
10	-	-	-	-	-	-	550	-	-	-
11	-	-	-	-	-	-	605	660	-	-
12	-	-	-	-	-	-	660	720	780	840

CHANNELIZATION DEVICE SPACING (feet)		
MPH	TAPER	TANGENT
50/70	40	80

PCMS	
PHASE 1	PHASE 2
LEFT 2 LANES CLOSED	ONE MILE AHEAD
2.0 SEC	2.0 SEC

FIELD LOCATE 1 MILE (+-) IN ADVANCE OF LANE CLOSURE

SIGN SPACING = X

FREEWAYS & EXPRESSWAYS	55 / 70 MPH	1500' ± (OR AS PER MUTCD)

(1) ALL SPACING MAY BE ADJUSTED TO ACCOMMODATE INTERCHANGE RAMPS, AT-GRADE INTERSECTIONS AND DRIVEWAYS.
(2) THIS SPACING MAY BE REDUCED IN URBAN AREAS TO FIT ROADWAY CONDITIONS.

NOTES:

1. SEE SPECIAL PROVISIONS FOR CLOSURE HOUR RESTRICTIONS.
2. ALL SIGNS ARE BLACK ON ORANGE UNLESS OTHERWISE DESIGNATED.
3. MINIMUM SHOULDER TAPER RATE = L/3.
4. COVER "TRUCKS LEAVING/ENTERING HIGHWAY" SIGNS DURING NON-WORKING HOURS.
5. NO FLAGGERS OR SPOTTERS ON I-5 OR THE RAMPS.

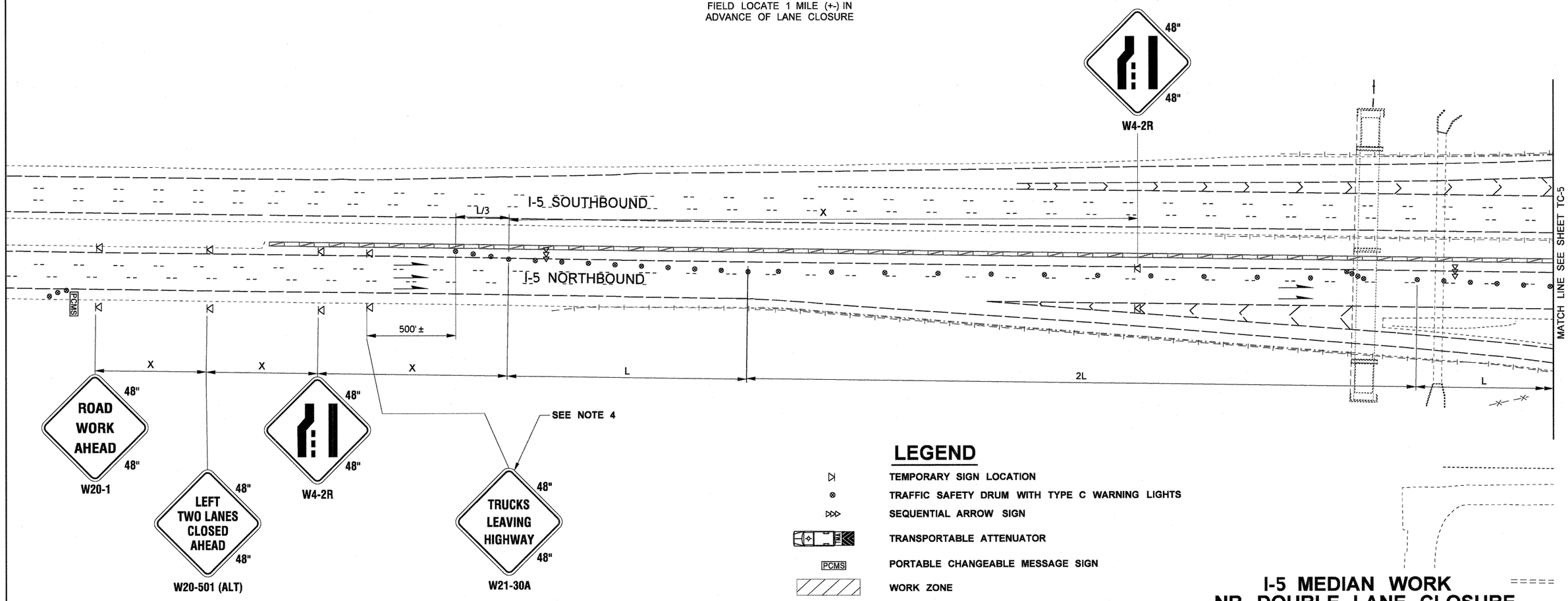

LEGEND

- TEMPORARY SIGN LOCATION
- TRAFFIC SAFETY DRUM WITH TYPE C WARNING LIGHTS
- SEQUENTIAL ARROW SIGN
- TRANSPORTABLE ATTENUATOR
- PCMS — PORTABLE CHANGEABLE MESSAGE SIGN
- WORK ZONE
- TYPE 3 BARRICADE
- PROTECTIVE VEHICLE

I-5 MEDIAN WORK
NB DOUBLE LANE CLOSURE

NOT TO SCALE

FILE NAME	U:\PSO\Projects\Clients\1598-TulalipTribes\554-1598-095 116th-Ph4-PSE\99Svcs\CADD\DGN\PS&ESheets\BL1598033_PS_TC.dgn
TIME	11:58:58 AM
DATE	8/25/2017
PLOTTED BY	purgabut
DESIGNED BY	M. TSUN
ENTERED BY	B. PURGANAN
CHECKED BY	D. PROCTOR
APPROVED BY	H. LONGFELLOW

REVISION	DATE	BY

REGION NO.	STATE	FED.AID PROJ.NO.
10	WASH	
JOB NUMBER		
CONTRACT NO.		LOCATION NO.

P.E. STAMP BOX — DATE

P.E. STAMP BOX — DATE

TULALIP TRIBES © Parametrix

I-5 / 116TH STREET NE
INTERCHANGE IMPROVEMENTS
PHASE 4 RAMPS

TRAFFIC CONTROL PLAN

Plot 4

PLAN REF NO TC4

SHEET 207 OF 238 SHEETS

BUFFER DATA										
LONGITUDINAL BUFFER SPACE = B										
SPEED (MPH)	25	30	35	40	45	50	55	60	65	70
LENGTH (feet)	155	200	250	305	360	425	495	570	645	730

TRANSPORTABLE ATTENUATOR ROLL AHEAD DISTANCE = R					
HOST VEHICLE WEIGHT 9,900 TO 22,000 LBS.			HOST VEHICLE WEIGHT > 22,000 LBS.		
< 45 MPH	45-55 MPH	> 55 MPH	< 45 MPH	45-55 MPH	> 55 MPH
100'	123'	172'	74'	100'	150'

PROTECTIVE VEHICLE (WORK VEHICLE) = R
NO SPECIFIED DISTANCE REQUIRED

MINIMUM LANE CLOSURE TAPER LENGTH = L (feet)										
LANE WIDTH (feet)	Posted Speed (mph)									
	25	30	35	40	45	50	55	60	65	70
10	-	-	-	-	-	-	550	-	-	-
11	-	-	-	-	-	-	605	660	-	-
12	-	-	-	-	-	-	660	720	780	840

CHANNELIZATION DEVICE SPACING (feet)		
MPH	TAPER	TANGENT
50/70	40	80

SIGN SPACING = X		
FREEWAYS & EXPRESSWAYS	55 / 70 MPH	1500' ± (OR AS PER MUTCD)

(1) ALL SPACING MAY BE ADJUSTED TO ACCOMMODATE INTERCHANGE RAMPS, AT-GRADE INTERSECTIONS AND DRIVEWAYS.
(2) THIS SPACING MAY BE REDUCED IN URBAN AREAS TO FIT ROADWAY CONDITIONS.

NOTES:

1. SEE SPECIAL PROVISIONS FOR CLOSURE HOUR RESTRICTIONS.
2. ALL SIGNS ARE BLACK ON ORANGE UNLESS OTHERWISE DESIGNATED.
3. MINIMUM SHOULDER TAPER RATE = L/3.
4. "TRUCKS LEAVING/ENTERING ROADWAY" SIGNS PRESENT ONLY DURING LANE CLOSURE HOURS WHEN FREQUENT TRUCK MOVEMENTS OCCURING. OTHERWISE, SIGNS ARE NOT TO BE USED.
5. NO FLAGGERS OR SPOTTERS ON I-5 OR THE RAMPS.

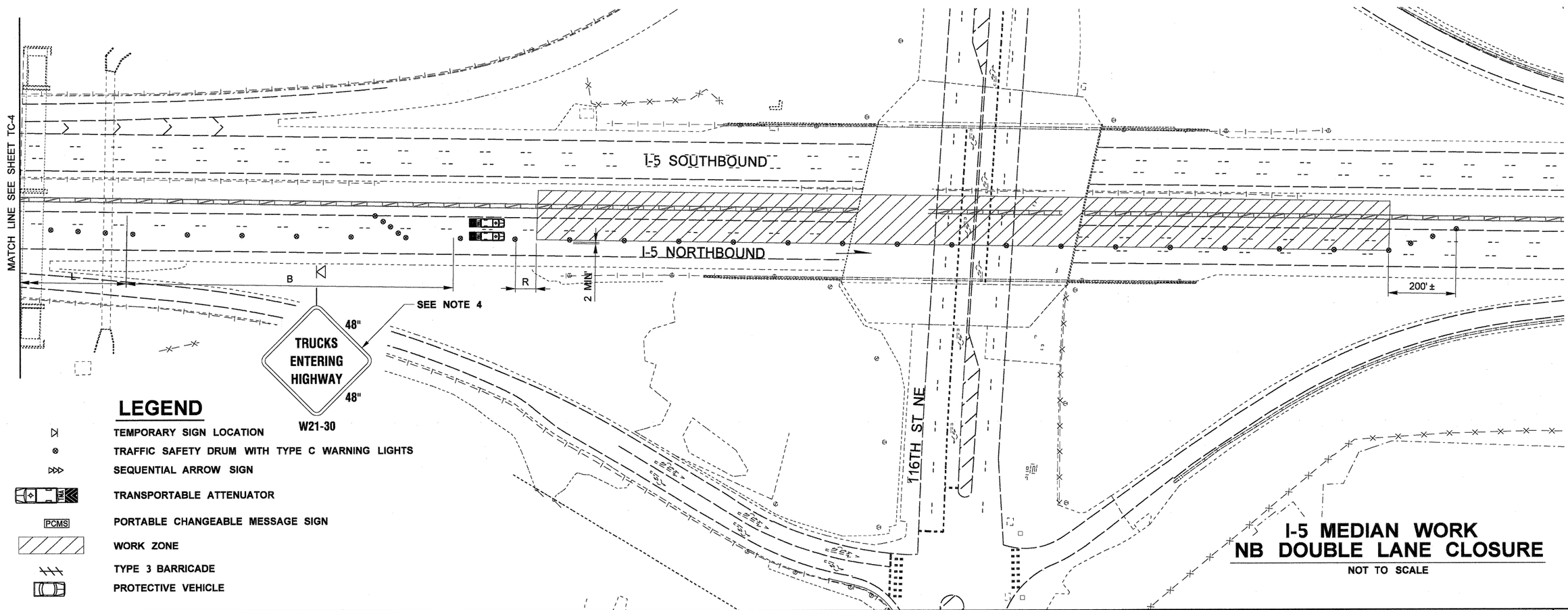

LEGEND

- TEMPORARY SIGN LOCATION
- TRAFFIC SAFETY DRUM WITH TYPE C WARNING LIGHTS
- SEQUENTIAL ARROW SIGN
- TRANSPORTABLE ATTENUATOR
- PCMS — PORTABLE CHANGEABLE MESSAGE SIGN
- WORK ZONE
- TYPE 3 BARRICADE
- PROTECTIVE VEHICLE

I-5 MEDIAN WORK
NB DOUBLE LANE CLOSURE

NOT TO SCALE

FILE NAME	U:\PSO\Projects\Clients\1598-TulalipTribes\554-1598-095 116th-Ph4-PSE\99Svcs\CADD\DGN\PS&ESheets\BL1598033_PS_TC.dgn
TIME	11:59:10 AM
DATE	8/25/2017
PLOTTED BY	purgabut
DESIGNED BY	M. TSUN
ENTERED BY	B. PURGANAN
CHECKED BY	D. PROCTOR
APPROVED BY	H. LONGFELLOW

REVISION	DATE	BY

REGION NO.	STATE	FED.AID PROJ.NO.
10	WASH	
JOB NUMBER		
CONTRACT NO.		LOCATION NO.

P.E. STAMP BOX — DATE

GERALD DAVID LONGFELLOW — STATE OF WASHINGTON — 37902 — REGISTERED PROFESSIONAL ENGINEER — P.E. STAMP BOX — DATE

TULALIP TRIBES — Parametrix

I-5 / 116TH STREET NE
INTERCHANGE IMPROVEMENTS
PHASE 4 RAMPS

TRAFFIC CONTROL PLAN

Plot 5
PLAN REF NO TC5
SHEET 208 OF 238 SHEETS

BUFFER DATA										
LONGITUDINAL BUFFER SPACE = B										
SPEED (MPH)	25	30	35	40	45	50	55	60	65	70
LENGTH (feet)	155	200	250	305	360	425	495	570	645	730

TRANSPORTABLE ATTENUATOR ROLL AHEAD DISTANCE = R					
HOST VEHICLE WEIGHT 9,900 TO 22,000 LBS.			HOST VEHICLE WEIGHT > 22,000 LBS.		
< 45 MPH	45-55 MPH	> 55 MPH	< 45 MPH	45-55 MPH	> 55 MPH
100'	123'	172'	74'	100'	150'

PROTECTIVE VEHICLE (WORK VEHICLE) = R
NO SPECIFIED DISTANCE REQUIRED

MINIMUM LANE CLOSURE TAPER LENGTH = L (feet)										
LANE WIDTH (feet)	Posted Speed (mph)									
	25	30	35	40	45	50	55	60	65	70
10	-	-	-	-	-	-	550	-	-	-
11	-	-	-	-	-	-	605	660	-	-
12	-	-	-	-	-	-	660	720	780	840

CHANNELIZATION DEVICE SPACING (feet)		
MPH	TAPER	TANGENT
50/70	40	80

SIGN SPACING = X		
FREEWAYS & EXPRESSWAYS	55 / 70 MPH	1500' ± (OR AS PER MUTCD)

(1) ALL SPACING MAY BE ADJUSTED TO ACCOMMODATE INTERCHANGE RAMPS, AT-GRADE INTERSECTIONS AND DRIVEWAYS.
(2) THIS SPACING MAY BE REDUCED IN URBAN AREAS TO FIT ROADWAY CONDITIONS.

LEGEND

- TEMPORARY SIGN LOCATION
- TRAFFIC SAFETY DRUM WITH TYPE C WARNING LIGHTS
- SEQUENTIAL ARROW SIGN
- TRANSPORTABLE ATTENUATOR
- PCMS — PORTABLE CHANGEABLE MESSAGE SIGN
- WORK ZONE
- TYPE 3 BARRICADE
- PROTECTIVE VEHICLE

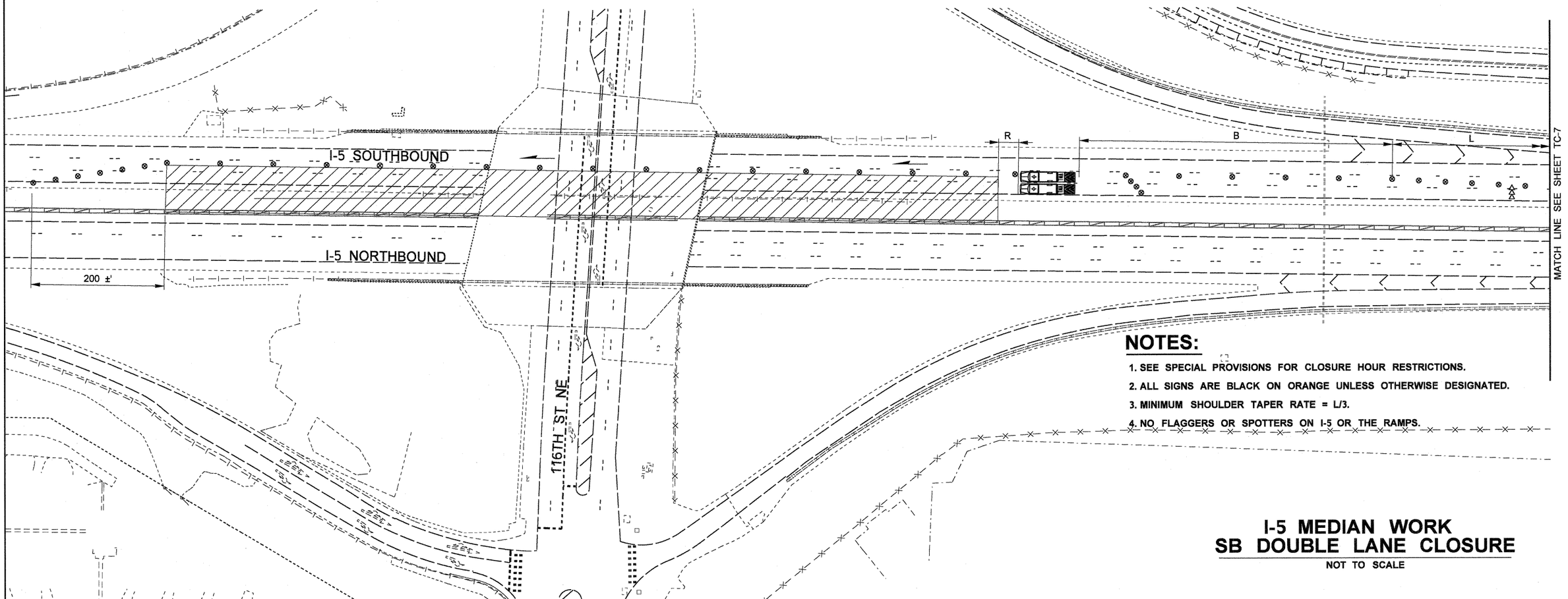

NOTES:

1. SEE SPECIAL PROVISIONS FOR CLOSURE HOUR RESTRICTIONS.
2. ALL SIGNS ARE BLACK ON ORANGE UNLESS OTHERWISE DESIGNATED.
3. MINIMUM SHOULDER TAPER RATE = L/3.
4. NO FLAGGERS OR SPOTTERS ON I-5 OR THE RAMPS.

I-5 MEDIAN WORK
SB DOUBLE LANE CLOSURE

NOT TO SCALE

FILE NAME	U:\PSO\Projects\Clients\1598-TulalipTribes\554-1598-095 116th-Ph4-PSE\99Svcs\CADD\DGN\PS&ESheets\BL1598033_PS_TC.dgn
TIME	11:59:23 AM
DATE	8/25/2017
PLOTTED BY	purgabut
DESIGNED BY	M. TSUN
ENTERED BY	B. PURGANAN
CHECKED BY	D. PROCTOR
APPROVED BY	H. LONGFELLOW

REVISION	DATE	BY

REGION NO.	STATE	FED.AID PROJ.NO.
10	WASH	
JOB NUMBER		
CONTRACT NO.		LOCATION NO.

P.E. STAMP BOX — DATE

HARRY DAVID LONGFELLOW — STATE OF WASHINGTON — 37902 — REGISTERED PROFESSIONAL ENGINEER

P.E. STAMP BOX — DATE

TULALIP TRIBES — Parametrix

I-5 / 116TH STREET NE
INTERCHANGE IMPROVEMENTS
PHASE 4 RAMPS

TRAFFIC CONTROL PLAN

Plot 6

PLAN REF NO TC6

SHEET 209 OF 238 SHEETS

BUFFER DATA										
LONGITUDINAL BUFFER SPACE = B										
SPEED (MPH)	25	30	35	40	45	50	55	60	65	70
LENGTH (feet)	155	200	250	305	360	425	495	570	645	730

TRANSPORTABLE ATTENUATOR ROLL AHEAD DISTANCE = R					
HOST VEHICLE WEIGHT 9,900 TO 22,000 LBS.			HOST VEHICLE WEIGHT > 22,000 LBS.		
< 45 MPH	45-55 MPH	> 55 MPH	< 45 MPH	45-55 MPH	> 55 MPH
100'	123'	172'	74'	100'	150'

PROTECTIVE VEHICLE (WORK VEHICLE) = R
NO SPECIFIED DISTANCE REQUIRED

MINIMUM LANE CLOSURE TAPER LENGTH = L (feet)										
LANE WIDTH (feet)	Posted Speed (mph)									
	25	30	35	40	45	50	55	60	65	70
10	-	-	-	-	-	-	550	-	-	-
11	-	-	-	-	-	-	605	660	-	-
12	-	-	-	-	-	-	660	720	780	840

CHANNELIZATION DEVICE SPACING (feet)		
MPH	TAPER	TANGENT
50/70	40	80

PCMS	
PHASE 1	PHASE 2
LEFT 2 LANES CLOSED	ONE MILE AHEAD
2.0 SEC	2.0 SEC

FIELD LOCATE 1 MILE (+-) IN ADVANCE OF LANE CLOSURE

SIGN SPACING = X		
FREEWAYS & EXPRESSWAYS	55 / 70 MPH	1500' ± (OR AS PER MUTCD)

(1) ALL SPACING MAY BE ADJUSTED TO ACCOMMODATE INTERCHANGE RAMPS, AT-GRADE INTERSECTIONS AND DRIVEWAYS.
(2) THIS SPACING MAY BE REDUCED IN URBAN AREAS TO FIT ROADWAY CONDITIONS.

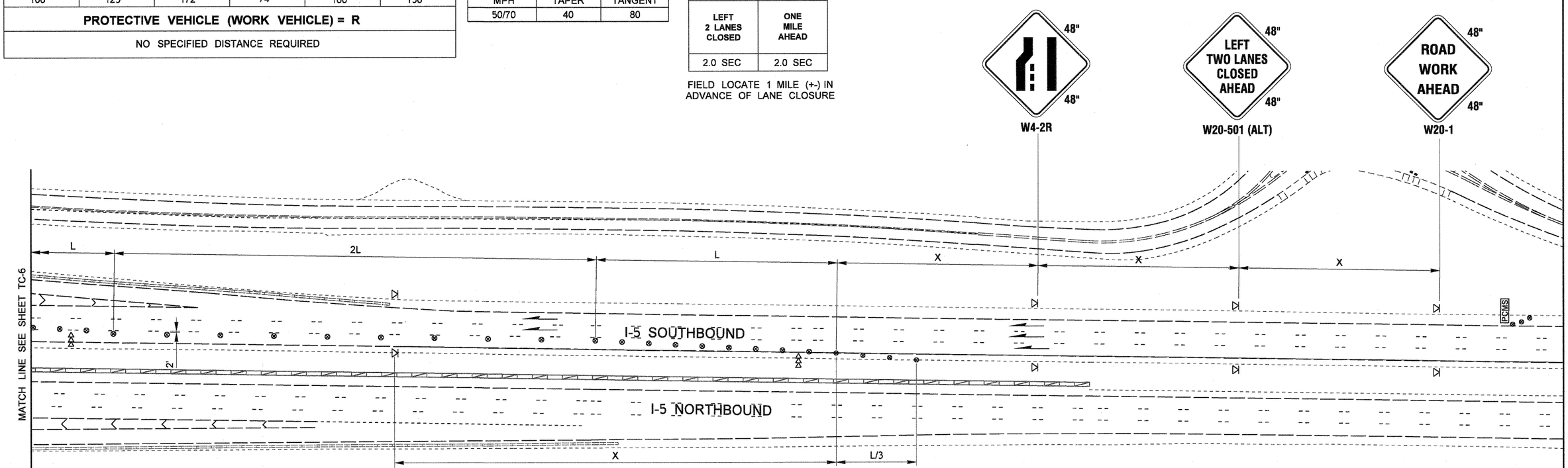

NOTES:

1. SEE SPECIAL PROVISIONS FOR CLOSURE HOUR RESTRICTIONS.
2. ALL SIGNS ARE BLACK ON ORANGE UNLESS OTHERWISE DESIGNATED.
3. MINIMUM SHOULDER TAPER RATE = L/3.
4. NO FLAGGERS OR SPOTTERS ON I-5 OR THE RAMPS.

LEGEND

- TEMPORARY SIGN LOCATION
- TRAFFIC SAFETY DRUM WITH TYPE C WARNING LIGHTS
- SEQUENTIAL ARROW SIGN
- TRANSPORTABLE ATTENUATOR
- PCMS — PORTABLE CHANGEABLE MESSAGE SIGN
- WORK ZONE
- TYPE 3 BARRICADE
- PROTECTIVE VEHICLE

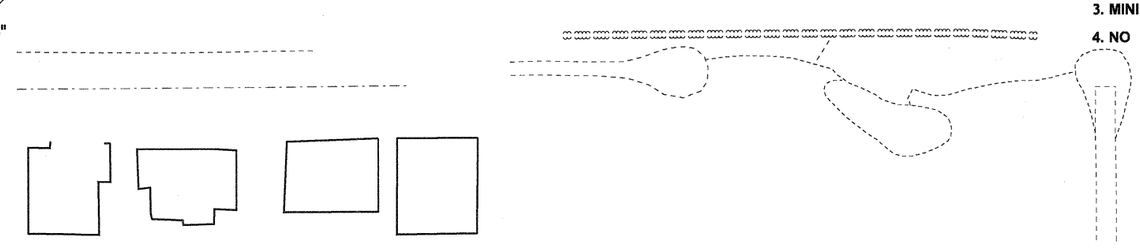

I-5 MEDIAN WORK
SB DOUBLE LANE CLOSURE

NOT TO SCALE

FILE NAME	U:\PSO\Projects\Clients\1598-TulalipTribes\554-1598-095 116th-Ph4-PSE\99Svcs\CADD\DGN\PS&ESheets\BL1598033_PS_TC.dgn
TIME	11:59:36 AM
DATE	8/25/2017
PLOTTED BY	purgabut
DESIGNED BY	M. TSUN
ENTERED BY	B. PURGANAN
CHECKED BY	D. PROCTOR
APPROVED BY	H. LONGFELLOW

REVISION	DATE	BY

REGION NO.	STATE	FED.AID PROJ.NO.
10	WASH	
JOB NUMBER		
CONTRACT NO.		LOCATION NO.

P.E. STAMP BOX — DATE

STATE OF WASHINGTON — DAVID LONGFELLOW — 37902 — REGISTERED PROFESSIONAL ENGINEER

P.E. STAMP BOX — DATE

TULALIP TRIBES — Parametrix

I-5 / 116TH STREET NE
INTERCHANGE IMPROVEMENTS
PHASE 4 RAMPS

TRAFFIC CONTROL PLAN

Plot 7

PLAN REF NO TC7

SHEET 210 OF 238 SHEETS

BUFFER DATA										
LONGITUDINAL BUFFER SPACE = B										
SPEED (MPH)	25	30	35	40	45	50	55	60	65	70
LENGTH (feet)	155	200	250	305	360	425	495	570	645	730

TRANSPORTABLE ATTENUATOR ROLL AHEAD DISTANCE = R					
HOST VEHICLE WEIGHT 9,900 TO 22,000 LBS.			HOST VEHICLE WEIGHT > 22,000 LBS.		
< 45 MPH	45-55 MPH	> 55 MPH	< 45 MPH	45-55 MPH	> 55 MPH
100'	123'	172'	74'	100'	150'

PROTECTIVE VEHICLE (WORK VEHICLE) = R
NO SPECIFIED DISTANCE REQUIRED

MINIMUM LANE CLOSURE TAPER LENGTH = L (feet)										
LANE WIDTH (feet)	Posted Speed (mph)									
	25	30	35	40	45	50	55	60	65	70
10	-	-	-	-	-	-	550	-	-	-
11	-	-	-	-	-	-	605	660	-	-
12	-	-	-	-	-	-	660	720	780	840

CHANNELIZATION DEVICE SPACING (feet)		
MPH	TAPER	TANGENT
50/70	40	80

PCMS	
PHASE 1	PHASE 2
RIGHT LANE CLOSED	ONE MILE AHEAD
2.0 SEC	2.0 SEC

FIELD LOCATE 1 MILE (+-) IN ADVANCE OF LANE CLOSURE

SIGN SPACING = X		
FREEWAYS & EXPRESSWAYS	55 / 70 MPH	1500' ± (OR AS PER MUTCD)

(1) ALL SPACING MAY BE ADJUSTED TO ACCOMMODATE INTERCHANGE RAMPS, AT-GRADE INTERSECTIONS AND DRIVEWAYS.
(2) THIS SPACING MAY BE REDUCED IN URBAN AREAS TO FIT ROADWAY CONDITIONS.

NOTES:

1. SEE SPECIAL PROVISIONS FOR CLOSURE HOUR RESTRICTIONS.
2. ALL SIGNS ARE BLACK ON ORANGE UNLESS OTHERWISE DESIGNATED.
3. MINIMUM SHOULDER TAPER RATE = L/3.
4. NO FLAGGERS OR SPOTTERS ON I-5 OR THE RAMPS.

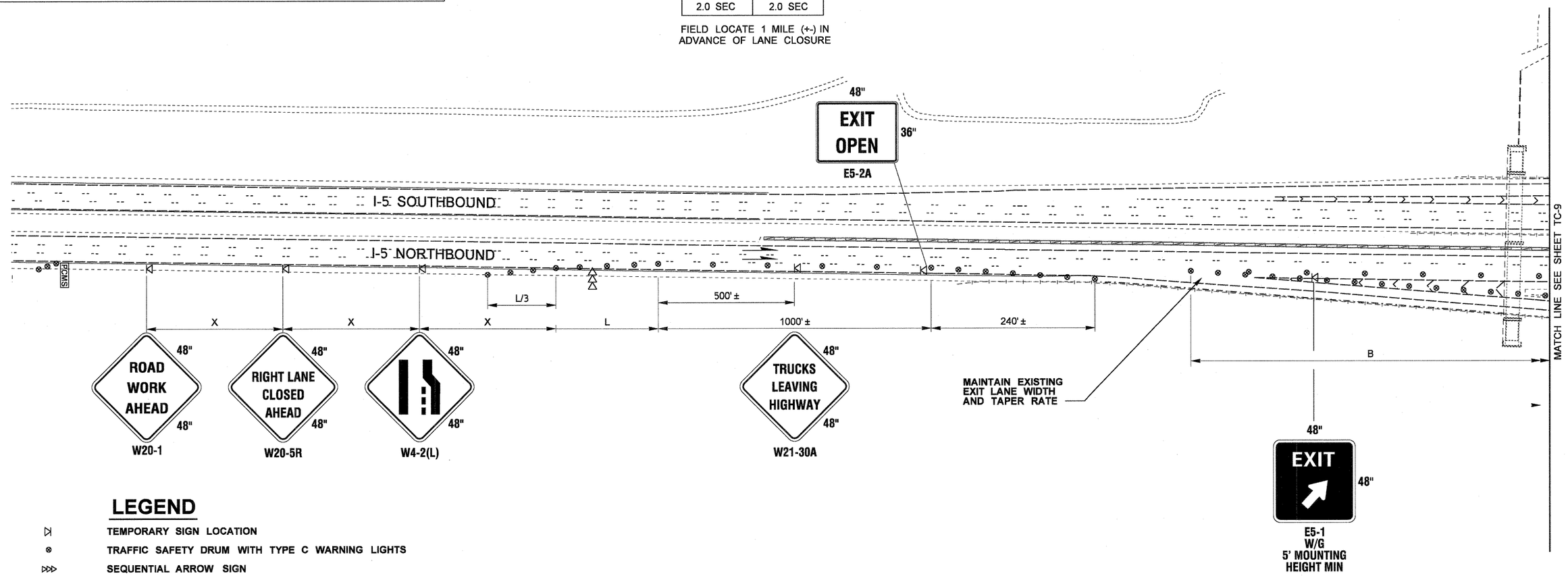

LEGEND

- TEMPORARY SIGN LOCATION
- TRAFFIC SAFETY DRUM WITH TYPE C WARNING LIGHTS
- SEQUENTIAL ARROW SIGN
- TRANSPORTABLE ATTENUATOR
- PCMS — PORTABLE CHANGEABLE MESSAGE SIGN
- WORK ZONE
- TYPE 3 BARRICADE
- PROTECTIVE VEHICLE

NB SINGLE LANE CLOSURE AT INTERCHANGE

NOT TO SCALE

FILE NAME	U:\PSO\Projects\Clients\1598-TulalipTribes\554-1598-095 116th-Ph4-PSE\99Svcs\CADD\DGN\PS&ESheets\BL1598033_PS_TC.dgn
TIME	11:59:47 AM
DATE	8/25/2017
PLOTTED BY	purgabut
DESIGNED BY	M. TSUN
ENTERED BY	B. PURGANAN
CHECKED BY	D. PROCTOR
APPROVED BY	H. LONGFELLOW

REVISION | DATE | BY

REGION NO. 10 | STATE WASH | FED.AID PROJ.NO.

JOB NUMBER

CONTRACT NO. | LOCATION NO.

P.E. STAMP BOX — DATE

HARRY DAVID LONGFELLOW, STATE OF WASHINGTON, 37902, REGISTERED PROFESSIONAL ENGINEER — P.E. STAMP BOX — DATE

TULALIP TRIBES — Parametrix

I-5 / 116TH STREET NE
INTERCHANGE IMPROVEMENTS
PHASE 4 RAMPS

TRAFFIC CONTROL PLAN

Plot 8

PLAN REF NO TC8

SHEET 211 OF 238 SHEETS

MINIMUM LANE CLOSURE TAPER LENGTH = L (feet)										
LANE WIDTH (feet)	Posted Speed (mph)									
	25	30	35	40	45	50	55	60	65	70
10	-	-	-	-	-	-	550	-	-	-
11	-	-	-	-	-	-	605	660	-	-
12	-	-	-	-	-	-	660	720	780	840

LEGEND

- TEMPORARY SIGN LOCATION
- TRAFFIC SAFETY DRUM WITH TYPE C WARNING LIGHTS
- SEQUENTIAL ARROW SIGN
- TRANSPORTABLE ATTENUATOR
- PCMS — PORTABLE CHANGEABLE MESSAGE SIGN
- WORK ZONE
- TYPE 3 BARRICADE
- PROTECTIVE VEHICLE

BUFFER DATA										
LONGITUDINAL BUFFER SPACE = B										
SPEED (MPH)	25	30	35	40	45	50	55	60	65	70
LENGTH (feet)	155	200	250	305	360	425	495	570	645	730

TRANSPORTABLE ATTENUATOR ROLL AHEAD DISTANCE = R					
HOST VEHICLE WEIGHT 9,900 TO 22,000 LBS.			HOST VEHICLE WEIGHT > 22,000 LBS.		
< 45 MPH	45-55 MPH	> 55 MPH	< 45 MPH	45-55 MPH	> 55 MPH
100'	123'	172'	74'	100'	150'

PROTECTIVE VEHICLE (WORK VEHICLE) = R
NO SPECIFIED DISTANCE REQUIRED

CHANNELIZATION DEVICE SPACING (feet)		
MPH	TAPER	TANGENT
50/70	40	80

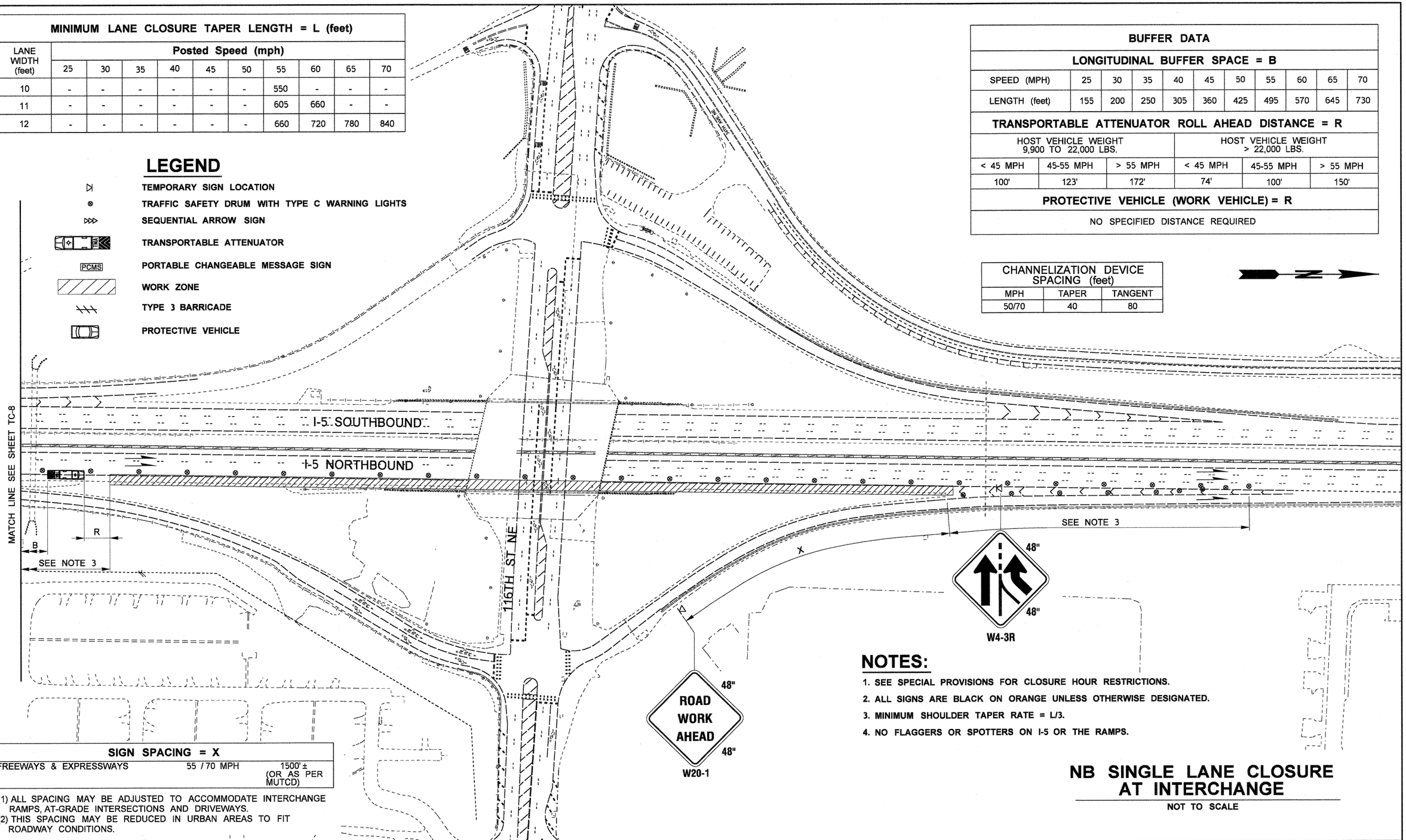

SIGN SPACING = X		
FREEWAYS & EXPRESSWAYS	55 / 70 MPH	1500' ± (OR AS PER MUTCD)

(1) ALL SPACING MAY BE ADJUSTED TO ACCOMMODATE INTERCHANGE RAMPS, AT-GRADE INTERSECTIONS AND DRIVEWAYS.
(2) THIS SPACING MAY BE REDUCED IN URBAN AREAS TO FIT ROADWAY CONDITIONS.

NOTES:

1. SEE SPECIAL PROVISIONS FOR CLOSURE HOUR RESTRICTIONS.
2. ALL SIGNS ARE BLACK ON ORANGE UNLESS OTHERWISE DESIGNATED.
3. MINIMUM SHOULDER TAPER RATE = L/3.
4. NO FLAGGERS OR SPOTTERS ON I-5 OR THE RAMPS.

NB SINGLE LANE CLOSURE AT INTERCHANGE

NOT TO SCALE

FILE NAME	U:\PSO\Projects\Clients\1598-TulalipTribes\554-1598-095 116th-Ph4-PSE\99Svcs\CADD\DGN\PS&ESheets\BL1598033_PS_TC.dgn
TIME	12:00:00 PM
DATE	8/25/2017
PLOTTED BY	purgabut
DESIGNED BY	M. TSUN
ENTERED BY	B. PURGANAN
CHECKED BY	D. PROCTOR
APPROVED BY	H. LONGFELLOW

REVISION	DATE	BY

REGION NO.	STATE	FED.AID PROJ.NO.
10	WASH	
JOB NUMBER		
CONTRACT NO.		LOCATION NO.

P.E. STAMP BOX — DATE

DAVID LONGFELLOW — STATE OF WASHINGTON — 37902 — REGISTERED PROFESSIONAL ENGINEER

P.E. STAMP BOX — DATE

TULALIP TRIBES — Parametrix

I-5 / 116TH STREET NE
INTERCHANGE IMPROVEMENTS
PHASE 4 RAMPS

TRAFFIC CONTROL PLAN

Plot 9

PLAN REF NO TC9

SHEET 212 OF 238 SHEETS

MINIMUM LANE CLOSURE TAPER LENGTH = L (feet)										
LANE WIDTH (feet)	Posted Speed (mph)									
	25	30	35	40	45	50	55	60	65	70
10	-	-	-	-	-	-	550	-	-	-
11	-	-	-	-	-	-	605	660	-	-
12	-	-	-	-	-	-	660	720	780	840

SIGN SPACING = X		
FREEWAYS & EXPRESSWAYS	55 / 70 MPH	1500' ± (OR AS PER MUTCD)

(1) ALL SPACING MAY BE ADJUSTED TO ACCOMMODATE INTERCHANGE RAMPS, AT-GRADE INTERSECTIONS AND DRIVEWAYS.
(2) THIS SPACING MAY BE REDUCED IN URBAN AREAS TO FIT ROADWAY CONDITIONS.

CHANNELIZATION DEVICE SPACING (feet)		
MPH	TAPER	TANGENT
50/70	40	80

NOTES:

1. SEE SPECIAL PROVISIONS FOR CLOSURE HOUR RESTRICTIONS.
2. ALL SIGNS ARE BLACK ON ORANGE UNLESS OTHERWISE DESIGNATED.
3. MINIMUM SHOULDER TAPER RATE = L/3.
4. NO FLAGGERS OR SPOTTERS ON I-5 OR THE RAMPS.

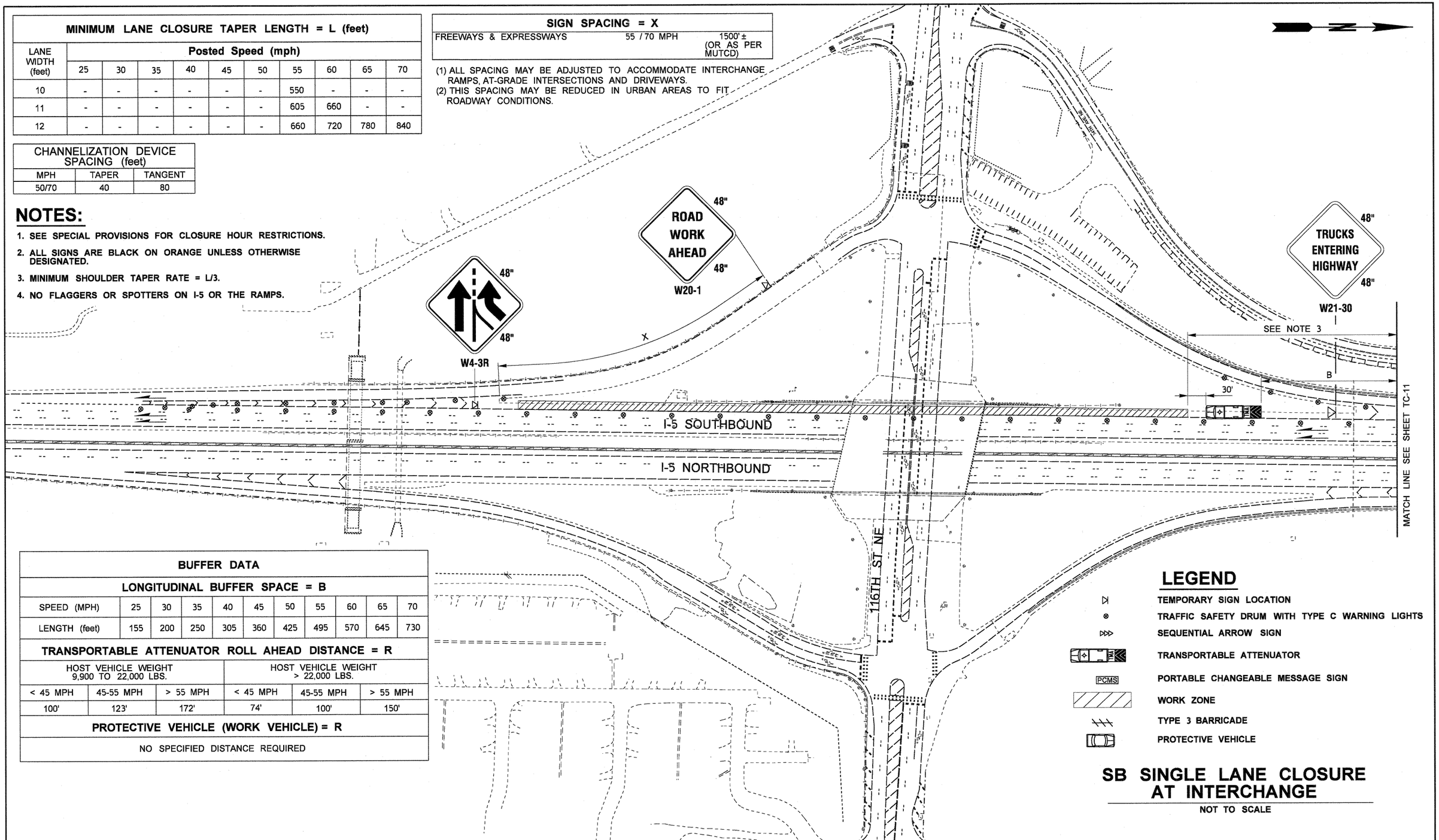

BUFFER DATA										
LONGITUDINAL BUFFER SPACE = B										
SPEED (MPH)	25	30	35	40	45	50	55	60	65	70
LENGTH (feet)	155	200	250	305	360	425	495	570	645	730

TRANSPORTABLE ATTENUATOR ROLL AHEAD DISTANCE = R					
HOST VEHICLE WEIGHT 9,900 TO 22,000 LBS.			HOST VEHICLE WEIGHT > 22,000 LBS.		
< 45 MPH	45-55 MPH	> 55 MPH	< 45 MPH	45-55 MPH	> 55 MPH
100'	123'	172'	74'	100'	150'

PROTECTIVE VEHICLE (WORK VEHICLE) = R
NO SPECIFIED DISTANCE REQUIRED

LEGEND

- TEMPORARY SIGN LOCATION
- TRAFFIC SAFETY DRUM WITH TYPE C WARNING LIGHTS
- SEQUENTIAL ARROW SIGN
- TRANSPORTABLE ATTENUATOR
- PCMS — PORTABLE CHANGEABLE MESSAGE SIGN
- WORK ZONE
- TYPE 3 BARRICADE
- PROTECTIVE VEHICLE

SB SINGLE LANE CLOSURE AT INTERCHANGE

NOT TO SCALE

FILE NAME	U:\PSO\Projects\Clients\1598-TulalipTribes\554-1598-095 116th-Ph4-PSE\99Svcs\CADD\DGN\PS&ESheets\BL1598033_PS_TC.dgn
TIME	12:00:14 PM
DATE	8/25/2017
PLOTTED BY	purgabut
DESIGNED BY	M. TSUN
ENTERED BY	B. PURGANAN
CHECKED BY	D. PROCTOR
APPROVED BY	H. LONGFELLOW

REVISION	DATE	BY

REGION NO.	STATE	FED.AID PROJ.NO.
10	WASH	
JOB NUMBER		
CONTRACT NO.		LOCATION NO.

P.E. STAMP BOX — DATE

HARRY DAVID LONGFELLOW — STATE OF WASHINGTON — 38702 — REGISTERED PROFESSIONAL ENGINEER — 8/31/17

P.E. STAMP BOX — DATE

TULALIP TRIBES — Parametrix

I-5 / 116TH STREET NE INTERCHANGE IMPROVEMENTS PHASE 4 RAMPS

TRAFFIC CONTROL PLAN

Plot 10

PLAN REF NO TC10

SHEET 213 OF 238 SHEETS

BUFFER DATA										
LONGITUDINAL BUFFER SPACE = B										
SPEED (MPH)	25	30	35	40	45	50	55	60	65	70
LENGTH (feet)	155	200	250	305	360	425	495	570	645	730

TRANSPORTABLE ATTENUATOR ROLL AHEAD DISTANCE = R					
HOST VEHICLE WEIGHT 9,900 TO 22,000 LBS.			HOST VEHICLE WEIGHT > 22,000 LBS.		
< 45 MPH	45-55 MPH	> 55 MPH	< 45 MPH	45-55 MPH	> 55 MPH
100'	123'	172'	74'	100'	150'

PROTECTIVE VEHICLE (WORK VEHICLE) = R
NO SPECIFIED DISTANCE REQUIRED

MINIMUM LANE CLOSURE TAPER LENGTH = L (feet)										
LANE WIDTH (feet)	Posted Speed (mph)									
	25	30	35	40	45	50	55	60	65	70
10	-	-	-	-	-	-	550	-	-	-
11	-	-	-	-	-	-	605	660	-	-
12	-	-	-	-	-	-	660	720	780	840

CHANNELIZATION DEVICE SPACING (feet)		
MPH	TAPER	TANGENT
50/70	40	80

PCMS	
PHASE 1	PHASE 2
RIGHT LANE CLOSED	ONE MILE AHEAD
2.0 SEC	2.0 SEC

FIELD LOCATE 1 MILE (+-) IN ADVANCE OF LANE CLOSURE

SIGN SPACING = X		
FREEWAYS & EXPRESSWAYS	55 / 70 MPH	1500' ± (OR AS PER MUTCD)

(1) ALL SPACING MAY BE ADJUSTED TO ACCOMMODATE INTERCHANGE RAMPS, AT-GRADE INTERSECTIONS AND DRIVEWAYS.
(2) THIS SPACING MAY BE REDUCED IN URBAN AREAS TO FIT ROADWAY CONDITIONS.

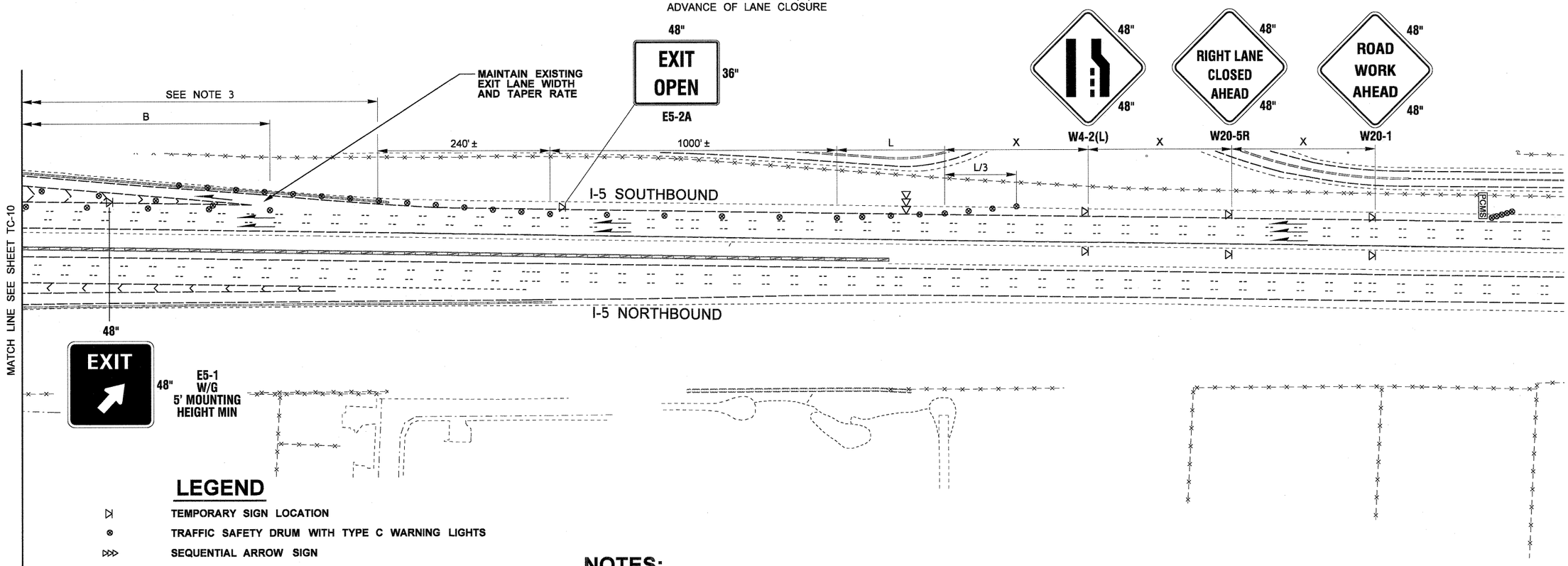

LEGEND

- TEMPORARY SIGN LOCATION
- TRAFFIC SAFETY DRUM WITH TYPE C WARNING LIGHTS
- SEQUENTIAL ARROW SIGN
- TRANSPORTABLE ATTENUATOR
- PCMS — PORTABLE CHANGEABLE MESSAGE SIGN
- WORK ZONE
- TYPE 3 BARRICADE
- PROTECTIVE VEHICLE

NOTES:

1. SEE SPECIAL PROVISIONS FOR CLOSURE HOUR RESTRICTIONS.
2. ALL SIGNS ARE BLACK ON ORANGE UNLESS OTHERWISE DESIGNATED.
3. MINIMUM SHOULDER TAPER RATE = L/3.
4. NO FLAGGERS OR SPOTTERS ON I-5 OR THE RAMPS.

SB SINGLE LANE CLOSURE AT INTERCHANGE

NOT TO SCALE

FILE NAME	U:\PSO\Projects\Clients\1598-TulalipTribes\554-1598-095 116th-Ph4-PSE\99Svcs\CADD\DGN\PS&ESheets\BL1598033_PS_TC.dgn
TIME	12:00:28 PM
DATE	8/25/2017
PLOTTED BY	purgabut
DESIGNED BY	M. TSUN
ENTERED BY	B. PURGANAN
CHECKED BY	D. PROCTOR
APPROVED BY	H. LONGFELLOW

REVISION | DATE | BY

REGION NO. 10 | STATE WASH | FED.AID PROJ.NO.

JOB NUMBER

CONTRACT NO. | LOCATION NO.

P.E. STAMP BOX — DATE

HARRY DAVID LONGFELLOW — STATE OF WASHINGTON — 37902 — REGISTERED PROFESSIONAL ENGINEER — 8/25/17

P.E. STAMP BOX — DATE

TULALIP TRIBES — Parametrix

I-5 / 116TH STREET NE INTERCHANGE IMPROVEMENTS PHASE 4 RAMPS

TRAFFIC CONTROL PLAN

PLAN REF NO TC11

SHEET 214 OF 238 SHEETS

SIGN SPACING = X		
FREEWAYS & EXPRESSWAYS	55 / 70 MPH	1500' ± (OR AS PER MUTCD)

(1) ALL SPACING MAY BE ADJUSTED TO ACCOMMODATE INTERCHANGE RAMPS, AT-GRADE INTERSECTIONS AND DRIVEWAYS.
(2) THIS SPACING MAY BE REDUCED IN URBAN AREAS TO FIT ROADWAY CONDITIONS.

MINIMUM LANE CLOSURE TAPER LENGTH = L (feet)										
LANE WIDTH (feet)	Posted Speed (mph)									
	25	30	35	40	45	50	55	60	65	70
10	-	-	-	-	-	-	550	-	-	-
11	-	-	-	-	-	-	605	660	-	-
12	-	-	-	-	-	-	660	720	780	840

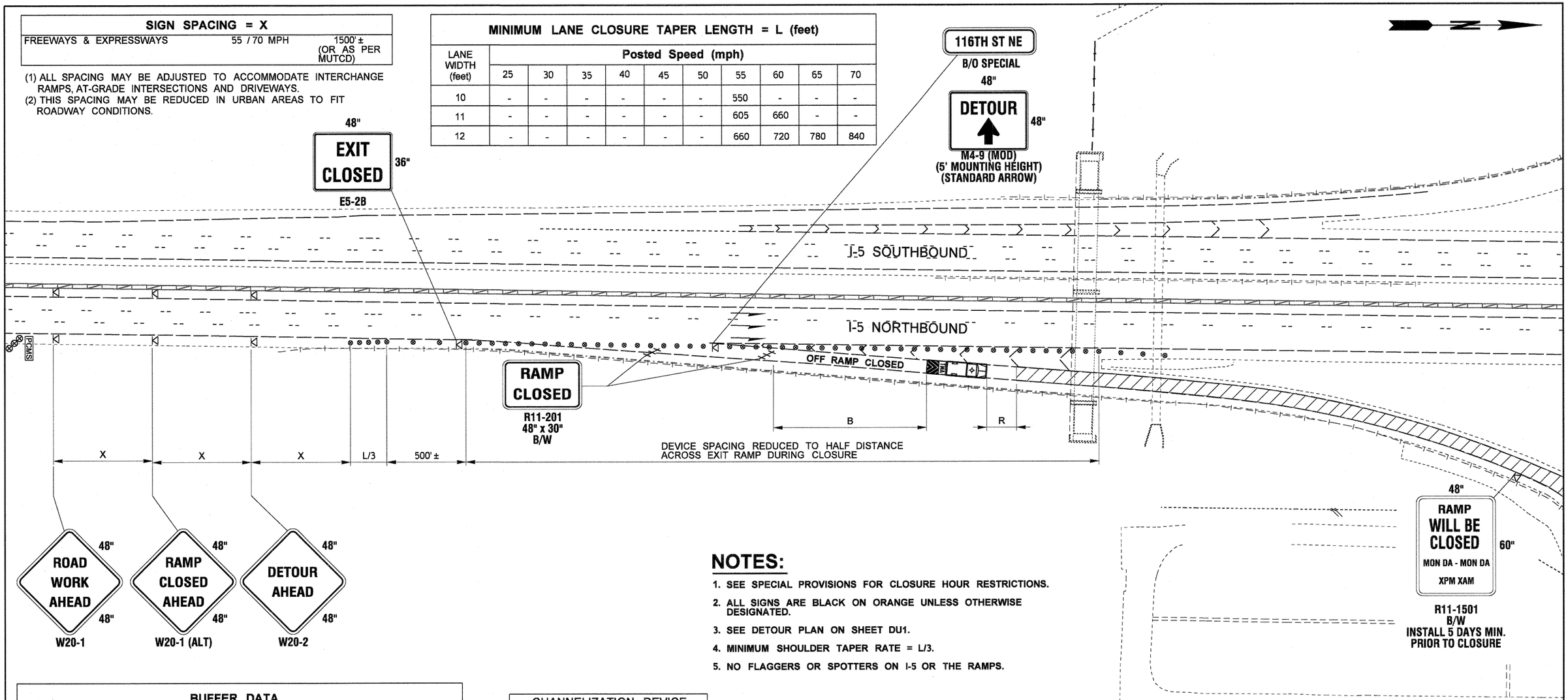

NOTES:

1. SEE SPECIAL PROVISIONS FOR CLOSURE HOUR RESTRICTIONS.
2. ALL SIGNS ARE BLACK ON ORANGE UNLESS OTHERWISE DESIGNATED.
3. SEE DETOUR PLAN ON SHEET DU1.
4. MINIMUM SHOULDER TAPER RATE = L/3.
5. NO FLAGGERS OR SPOTTERS ON I-5 OR THE RAMPS.

BUFFER DATA										
LONGITUDINAL BUFFER SPACE = B										
SPEED (MPH)	25	30	35	40	45	50	55	60	65	70
LENGTH (feet)	155	200	250	305	360	425	495	570	645	730
TRANSPORTABLE ATTENUATOR ROLL AHEAD DISTANCE = R										
HOST VEHICLE WEIGHT 9,900 TO 22,000 LBS.			HOST VEHICLE WEIGHT > 22,000 LBS.							
< 45 MPH	45-55 MPH	> 55 MPH	< 45 MPH	45-55 MPH	> 55 MPH					
100'	123'	172'	74'	100'	150'					
PROTECTIVE VEHICLE (WORK VEHICLE) = R										
NO SPECIFIED DISTANCE REQUIRED										

CHANNELIZATION DEVICE SPACING (feet)		
MPH	TAPER	TANGENT
50/70	40	80

PCMS	
PHASE 1	PHASE 2
EXIT TO 116TH ST CLOSED	USE ALT ROUTE
2.0 SEC	2.0 SEC

FIELD LOCATE ½ MILE PRIOR TO 88TH ST

LEGEND

- TEMPORARY SIGN LOCATION
- TRAFFIC SAFETY DRUM WITH TYPE C WARNING LIGHTS
- SEQUENTIAL ARROW SIGN
- TRANSPORTABLE ATTENUATOR
- PORTABLE CHANGEABLE MESSAGE SIGN
- WORK ZONE
- TYPE 3 BARRICADE
- PROTECTIVE VEHICLE

NB I-5 OFF-RAMP CLOSURE

NOT TO SCALE

FILE NAME	U:\PSO\Projects\Clients\1598-TulalipTribes\554-1598-095 116th-Ph4-PSE\99Svcs\CADD\DGN\PS&ESheets\BL1598033_PS_TC.dgn
TIME	12:00:40 PM
DATE	8/25/2017
PLOTTED BY	purgabut
DESIGNED BY	M. TSUN
ENTERED BY	B. PURGANAN
CHECKED BY	D. PROCTOR
APPROVED BY	H. LONGFELLOW

REVISION | DATE | BY

REGION NO.	STATE	FED.AID PROJ.NO.
10	WASH	
JOB NUMBER		
CONTRACT NO.		LOCATION NO.

DATE
P.E. STAMP BOX

HARRY DAVID LONGFELLOW
STATE OF WASHINGTON
37802
REGISTERED PROFESSIONAL ENGINEER
8/25/17
DATE
P.E. STAMP BOX

TULALIP TRIBES
Parametrix

I-5 / 116TH STREET NE
INTERCHANGE IMPROVEMENTS
PHASE 4 RAMPS

TRAFFIC CONTROL PLAN

Plot 12
PLAN REF NO
TC12
SHEET 215 OF 238 SHEETS

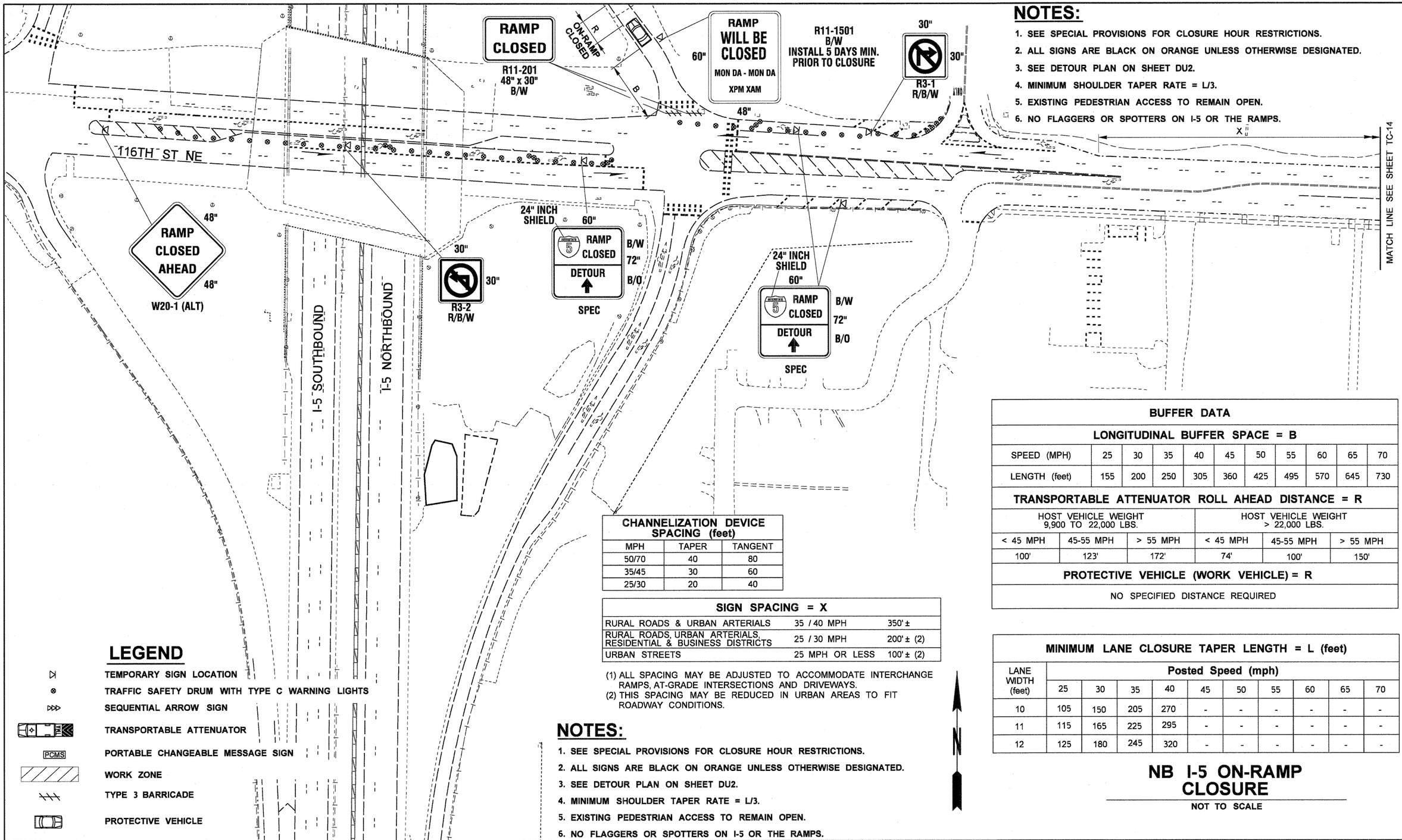

NOTES:

1. SEE SPECIAL PROVISIONS FOR CLOSURE HOUR RESTRICTIONS.
2. ALL SIGNS ARE BLACK ON ORANGE UNLESS OTHERWISE DESIGNATED.
3. SEE DETOUR PLAN ON SHEET DU2.
4. MINIMUM SHOULDER TAPER RATE = L/3.
5. EXISTING PEDESTRIAN ACCESS TO REMAIN OPEN.
6. NO FLAGGERS OR SPOTTERS ON I-5 OR THE RAMPS.

BUFFER DATA										
LONGITUDINAL BUFFER SPACE = B										
SPEED (MPH)	25	30	35	40	45	50	55	60	65	70
LENGTH (feet)	155	200	250	305	360	425	495	570	645	730

TRANSPORTABLE ATTENUATOR ROLL AHEAD DISTANCE = R					
HOST VEHICLE WEIGHT 9,900 TO 22,000 LBS.			HOST VEHICLE WEIGHT > 22,000 LBS.		
< 45 MPH	45-55 MPH	> 55 MPH	< 45 MPH	45-55 MPH	> 55 MPH
100'	123'	172'	74'	100'	150'
PROTECTIVE VEHICLE (WORK VEHICLE) = R					
NO SPECIFIED DISTANCE REQUIRED					

CHANNELIZATION DEVICE SPACING (feet)		
MPH	TAPER	TANGENT
50/70	40	80
35/45	30	60
25/30	20	40

SIGN SPACING = X		
RURAL ROADS & URBAN ARTERIALS	35 / 40 MPH	350' ±
RURAL ROADS, URBAN ARTERIALS, RESIDENTIAL & BUSINESS DISTRICTS	25 / 30 MPH	200' ± (2)
URBAN STREETS	25 MPH OR LESS	100' ± (2)

(1) ALL SPACING MAY BE ADJUSTED TO ACCOMMODATE INTERCHANGE RAMPS, AT-GRADE INTERSECTIONS AND DRIVEWAYS.
(2) THIS SPACING MAY BE REDUCED IN URBAN AREAS TO FIT ROADWAY CONDITIONS.

MINIMUM LANE CLOSURE TAPER LENGTH = L (feet)										
LANE WIDTH (feet)	Posted Speed (mph)									
	25	30	35	40	45	50	55	60	65	70
10	105	150	205	270	-	-	-	-	-	-
11	115	165	225	295	-	-	-	-	-	-
12	125	180	245	320	-	-	-	-	-	-

LEGEND

- TEMPORARY SIGN LOCATION
- TRAFFIC SAFETY DRUM WITH TYPE C WARNING LIGHTS
- SEQUENTIAL ARROW SIGN
- TRANSPORTABLE ATTENUATOR
- PCMS — PORTABLE CHANGEABLE MESSAGE SIGN
- WORK ZONE
- TYPE 3 BARRICADE
- PROTECTIVE VEHICLE

NOTES:

1. SEE SPECIAL PROVISIONS FOR CLOSURE HOUR RESTRICTIONS.
2. ALL SIGNS ARE BLACK ON ORANGE UNLESS OTHERWISE DESIGNATED.
3. SEE DETOUR PLAN ON SHEET DU2.
4. MINIMUM SHOULDER TAPER RATE = L/3.
5. EXISTING PEDESTRIAN ACCESS TO REMAIN OPEN.
6. NO FLAGGERS OR SPOTTERS ON I-5 OR THE RAMPS.

NB I-5 ON-RAMP CLOSURE

NOT TO SCALE

FILE NAME	U:\PSO\Projects\Clients\1598-TulalipTribes\554-1598-095 116th-Ph4-PSE\99Svcs\CADD\DGN\PS&ESheets\BL1598033_PS_TC.dgn
TIME	12:00:52 PM
DATE	8/25/2017
PLOTTED BY	purgabut
DESIGNED BY	M. TSUN
ENTERED BY	B. PURGANAN
CHECKED BY	D. PROCTOR
APPROVED BY	H. LONGFELLOW

REVISION | DATE | BY

REGION NO. 10 | STATE WASH | FED.AID PROJ.NO.

JOB NUMBER

CONTRACT NO. | LOCATION NO.

P.E. STAMP BOX — DATE

HARRY DAVID LONGFELLOW — STATE OF WASHINGTON — 37902 — REGISTERED PROFESSIONAL ENGINEER — 8/25/17

P.E. STAMP BOX — DATE

TULALIP TRIBES — Parametrix

I-5 / 116TH STREET NE
INTERCHANGE IMPROVEMENTS
PHASE 4 RAMPS

TRAFFIC CONTROL PLAN

Plot 13

PLAN REF NO TC13

SHEET 216 OF 238 SHEETS

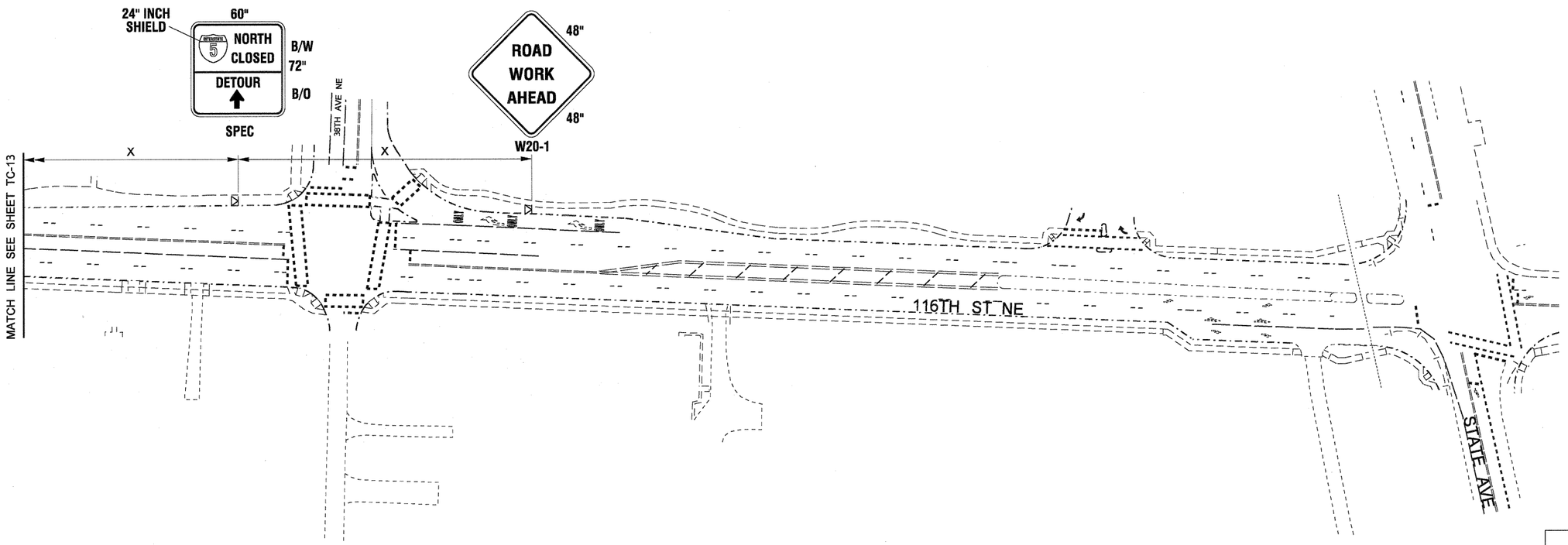

CHANNELIZATION DEVICE SPACING (feet)		
MPH	TAPER	TANGENT
50/70	40	80
35/45	30	60
25/30	20	40

SIGN SPACING = X		
RURAL ROADS & URBAN ARTERIALS	35 / 40 MPH	350' ±
RURAL ROADS, URBAN ARTERIALS, RESIDENTIAL & BUSINESS DISTRICTS	25 / 30 MPH	200' ± (2)
URBAN STREETS	25 MPH OR LESS	100' ± (2)

(1) ALL SPACING MAY BE ADJUSTED TO ACCOMMODATE INTERCHANGE RAMPS, AT-GRADE INTERSECTIONS AND DRIVEWAYS.
(2) THIS SPACING MAY BE REDUCED IN URBAN AREAS TO FIT ROADWAY CONDITIONS.

LEGEND

- TEMPORARY SIGN LOCATION
- TRAFFIC SAFETY DRUM WITH TYPE C WARNING LIGHTS
- SEQUENTIAL ARROW SIGN
- TRANSPORTABLE ATTENUATOR
- PCMS — PORTABLE CHANGEABLE MESSAGE SIGN
- WORK ZONE
- TYPE 3 BARRICADE
- PROTECTIVE VEHICLE

NOTES:

1. SEE SPECIAL PROVISIONS FOR CLOSURE HOUR RESTRICTIONS.
2. ALL SIGNS ARE BLACK ON ORANGE UNLESS OTHERWISE DESIGNATED.
3. SEE DETOUR PLAN ON SHEET DU2.
4. MINIMUM SHOULDER TAPER RATE = L/3.
5. NO FLAGGERS OR SPOTTERS ON I-5 OR THE RAMPS.

MINIMUM LANE CLOSURE TAPER LENGTH = L (feet)										
LANE WIDTH (feet)	Posted Speed (mph)									
	25	30	35	40	45	50	55	60	65	70
10	105	150	205	270	-	-	-	-	-	-
11	115	165	225	295	-	-	-	-	-	-
12	125	180	245	320	-	-	-	-	-	-

NB I-5 ON-RAMP CLOSURE

NOT TO SCALE

FILE NAME	U:\PSO\Projects\Clients\1598-TulalipTribes\554-1598-095 116th-Ph4-PSE\99Svcs\CADD\DGN\PS&ESheets\BL1598033_PS_TC.dgn
TIME	12:01:05 PM
DATE	8/25/2017
PLOTTED BY	purgabut
DESIGNED BY	M. TSUN
ENTERED BY	B. PURGANAN
CHECKED BY	D. PROCTOR
APPROVED BY	H. LONGFELLOW

REVISION	DATE	BY

REGION NO.	STATE	FED.AID PROJ.NO.
10	WASH	
JOB NUMBER		
CONTRACT NO.		LOCATION NO.

P.E. STAMP BOX — DATE

HARDY DAVID LONGFELLOW — STATE OF WASHINGTON — 37902 — REGISTERED PROFESSIONAL ENGINEER

P.E. STAMP BOX — DATE

TULALIP TRIBES — Parametrix

I-5 / 116TH STREET NE
INTERCHANGE IMPROVEMENTS
PHASE 4 RAMPS

TRAFFIC CONTROL PLAN

Plot 14

PLAN REF NO
TC14

SHEET 217 OF 238 SHEETS

NOTES:

1. SEE SPECIAL PROVISIONS FOR CLOSURE HOUR RESTRICTIONS.
2. ALL SIGNS ARE BLACK ON ORANGE UNLESS OTHERWISE DESIGNATED.
3. SEE DETOUR PLAN ON SHEET DU3.
4. MINIMUM SHOULDER TAPER RATE = L/3.
5. NO FLAGGERS OR SPOTTERS ON I-5 OR THE RAMPS.

PCMS	
PHASE 1	PHASE 2
EXIT TO 116TH ST CLOSED	USE ALT ROUTES
2.0 SEC	2.0 SEC

FIELD LOCATE ½ MILE PRIOR TO SR531

BUFFER DATA										
LONGITUDINAL BUFFER SPACE = B										
SPEED (MPH)	25	30	35	40	45	50	55	60	65	70
LENGTH (feet)	155	200	250	305	360	425	495	570	645	730

TRANSPORTABLE ATTENUATOR ROLL AHEAD DISTANCE = R					
HOST VEHICLE WEIGHT 9,900 TO 22,000 LBS.			HOST VEHICLE WEIGHT > 22,000 LBS.		
< 45 MPH	45-55 MPH	> 55 MPH	< 45 MPH	45-55 MPH	> 55 MPH
100'	123'	172'	74'	100'	150'

PROTECTIVE VEHICLE (WORK VEHICLE) = R
NO SPECIFIED DISTANCE REQUIRED

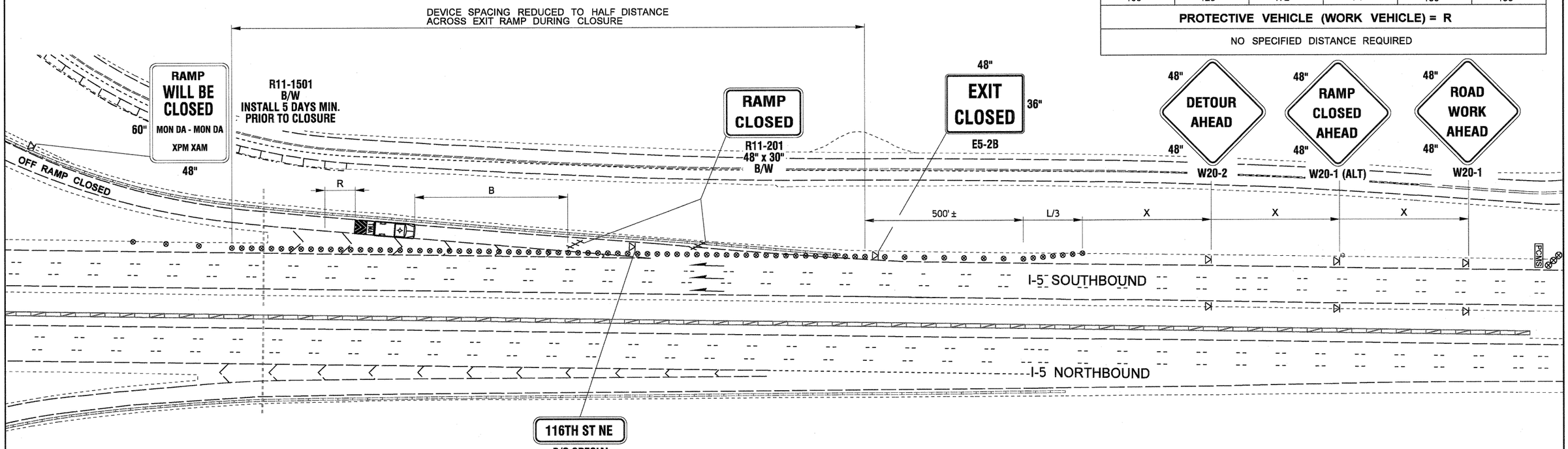

LEGEND

- TEMPORARY SIGN LOCATION
- TRAFFIC SAFETY DRUM WITH TYPE C WARNING LIGHTS
- SEQUENTIAL ARROW SIGN
- TRANSPORTABLE ATTENUATOR
- PCMS — PORTABLE CHANGEABLE MESSAGE SIGN
- WORK ZONE
- TYPE 3 BARRICADE
- PROTECTIVE VEHICLE

MINIMUM LANE CLOSURE TAPER LENGTH = L (feet)										
LANE WIDTH (feet)	Posted Speed (mph)									
	25	30	35	40	45	50	55	60	65	70
10	-	-	-	-	-	-	550	-	-	-
11	-	-	-	-	-	-	605	660	-	-
12	-	-	-	-	-	-	660	720	780	840

CHANNELIZATION DEVICE SPACING (feet)		
MPH	TAPER	TANGENT
50/70	40	80

SIGN SPACING = X		
FREEWAYS & EXPRESSWAYS	55 / 70 MPH	1500' ± (OR AS PER MUTCD)

(1) ALL SPACING MAY BE ADJUSTED TO ACCOMMODATE INTERCHANGE RAMPS, AT-GRADE INTERSECTIONS AND DRIVEWAYS.
(2) THIS SPACING MAY BE REDUCED IN URBAN AREAS TO FIT ROADWAY CONDITIONS.

N

SB I-5 OFF-RAMP CLOSURE

NOT TO SCALE

FILE NAME	U:\PSO\Projects\Clients\1598-TulalipTribes\554-1598-095 116th-Ph4-PSE\99Svcs\CADD\DGN\PS&ESheets\BL1598033_PS_TC.dgn
TIME	12:01:16 PM
DATE	8/25/2017
PLOTTED BY	purgabut
DESIGNED BY	M. TSUN
ENTERED BY	B. PURGANAN
CHECKED BY	D. PROCTOR
APPROVED BY	H. LONGFELLOW

REVISION	DATE	BY

REGION NO.	STATE	FED.AID PROJ.NO.
10	WASH	
JOB NUMBER		
CONTRACT NO.		LOCATION NO.

P.E. STAMP BOX — DATE

HARRY DAVID LONGFELLOW — STATE OF WASHINGTON — 37900 — REGISTERED PROFESSIONAL ENGINEER

P.E. STAMP BOX — DATE

TULALIP TRIBES — Parametrix

I-5 / 116TH STREET NE INTERCHANGE IMPROVEMENTS PHASE 4 RAMPS

TRAFFIC CONTROL PLAN

Plot 15

PLAN REF NO TC15

SHEET 218 OF 238 SHEETS

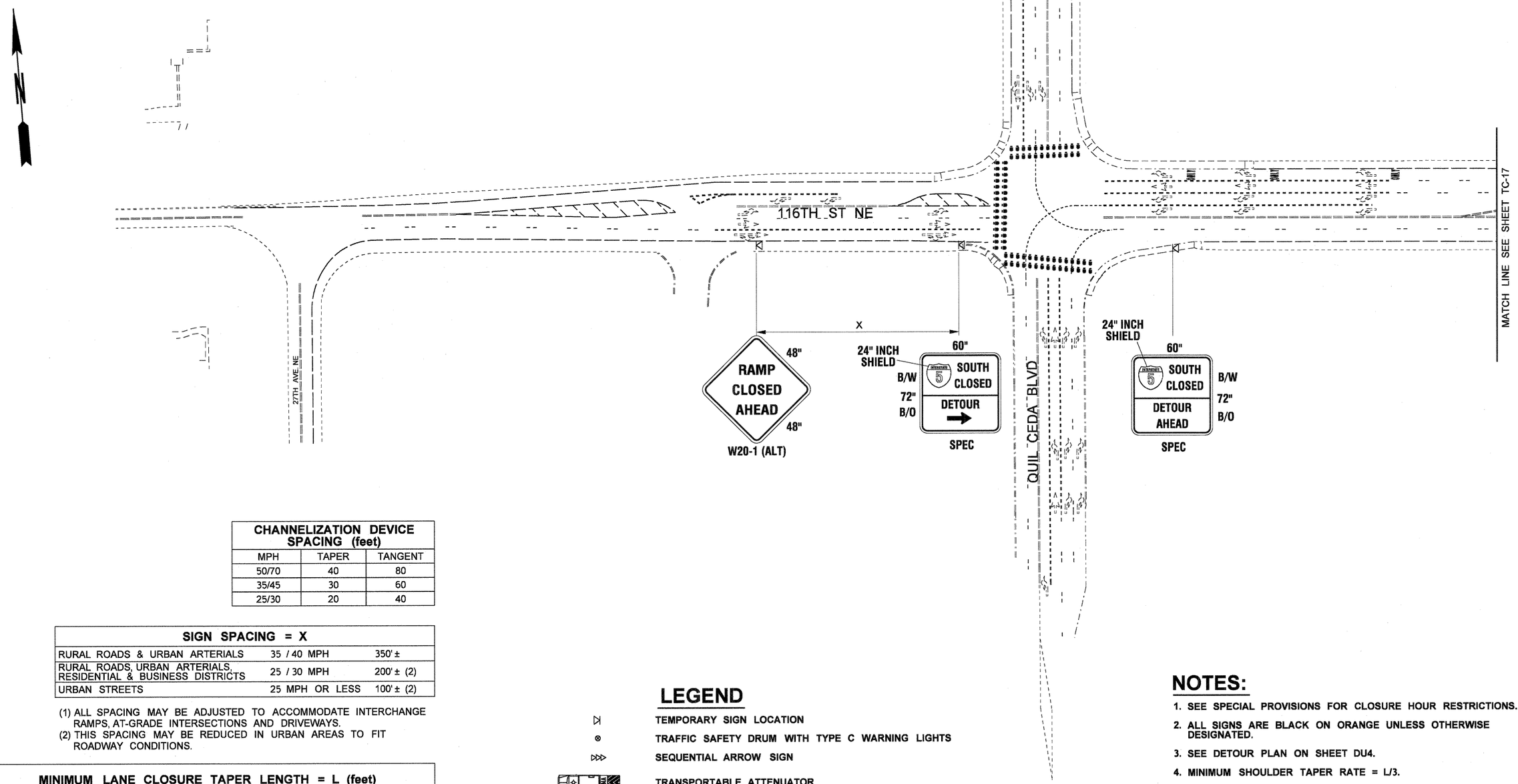

CHANNELIZATION DEVICE SPACING (feet)		
MPH	TAPER	TANGENT
50/70	40	80
35/45	30	60
25/30	20	40

SIGN SPACING = X		
RURAL ROADS & URBAN ARTERIALS	35 / 40 MPH	350'±
RURAL ROADS, URBAN ARTERIALS, RESIDENTIAL & BUSINESS DISTRICTS	25 / 30 MPH	200'± (2)
URBAN STREETS	25 MPH OR LESS	100'± (2)

(1) ALL SPACING MAY BE ADJUSTED TO ACCOMMODATE INTERCHANGE RAMPS, AT-GRADE INTERSECTIONS AND DRIVEWAYS.
(2) THIS SPACING MAY BE REDUCED IN URBAN AREAS TO FIT ROADWAY CONDITIONS.

MINIMUM LANE CLOSURE TAPER LENGTH = L (feet)										
LANE WIDTH (feet)	Posted Speed (mph)									
	25	30	35	40	45	50	55	60	65	70
10	105	150	205	270	-	-	-	-	-	-
11	115	165	225	295	-	-	-	-	-	-
12	125	180	245	320	-	-	-	-	-	-

LEGEND

- TEMPORARY SIGN LOCATION
- TRAFFIC SAFETY DRUM WITH TYPE C WARNING LIGHTS
- SEQUENTIAL ARROW SIGN
- TRANSPORTABLE ATTENUATOR
- PCMS — PORTABLE CHANGEABLE MESSAGE SIGN
- WORK ZONE
- TYPE 3 BARRICADE
- PROTECTIVE VEHICLE

NOTES:

1. SEE SPECIAL PROVISIONS FOR CLOSURE HOUR RESTRICTIONS.
2. ALL SIGNS ARE BLACK ON ORANGE UNLESS OTHERWISE DESIGNATED.
3. SEE DETOUR PLAN ON SHEET DU4.
4. MINIMUM SHOULDER TAPER RATE = L/3.
5. NO FLAGGERS OR SPOTTERS ON I-5 OR THE RAMPS.

SB I-5 ON-RAMP CLOSURE

NOT TO SCALE

FILE NAME	U:\PSO\Projects\Clients\1598-TulalipTribes\554-1598-095 116th-Ph4-PSE\99Svcs\CADD\DGN\PS&ESheets\BL1598033_PS_TC.dgn
TIME	12:01:29 PM
DATE	8/25/2017
PLOTTED BY	purgabut
DESIGNED BY	M. TSUN
ENTERED BY	B. PURGANAN
CHECKED BY	D. PROCTOR
APPROVED BY	H. LONGFELLOW

REVISION | DATE | BY

REGION NO. 10 | STATE WASH | FED.AID PROJ.NO.

JOB NUMBER

CONTRACT NO. | LOCATION NO.

P.E. STAMP BOX — DATE

P.E. STAMP BOX — DATE

TULALIP TRIBES — Parametrix

I-5 / 116TH STREET NE INTERCHANGE IMPROVEMENTS PHASE 4 RAMPS

TRAFFIC CONTROL PLAN

Plot 16

PLAN REF NO TC16

SHEET 219 OF 238 SHEETS

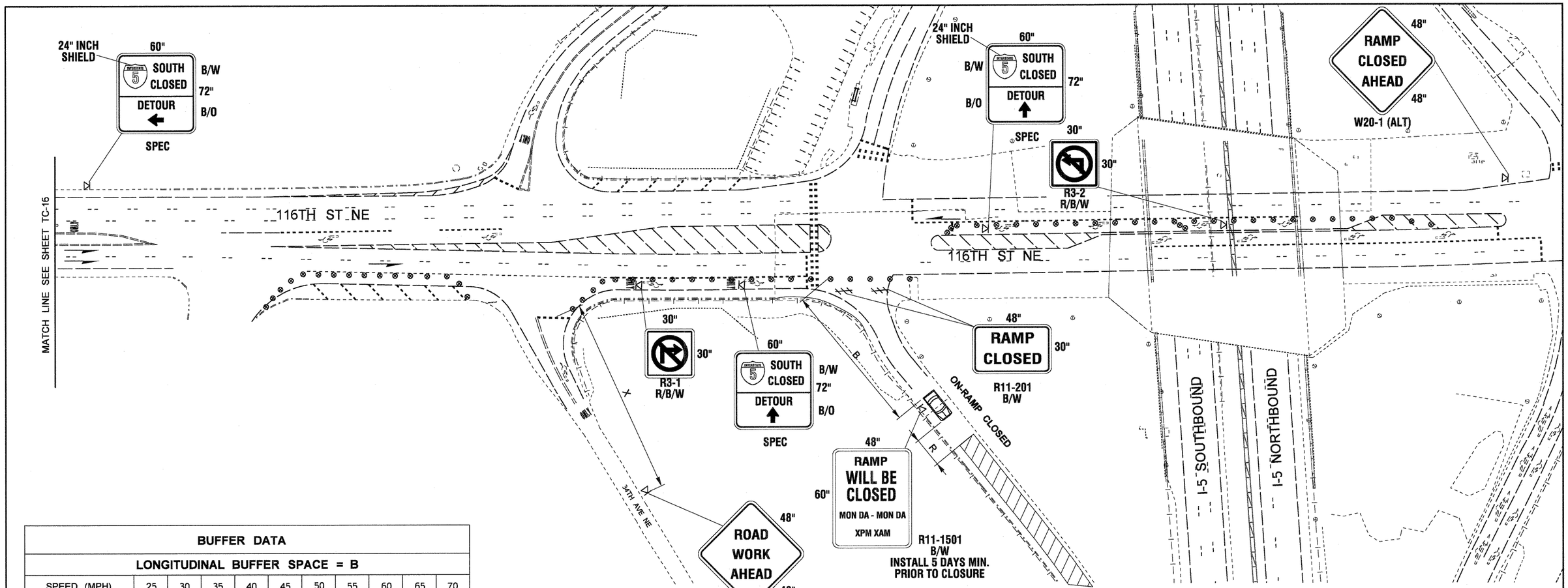

BUFFER DATA										
LONGITUDINAL BUFFER SPACE = B										
SPEED (MPH)	25	30	35	40	45	50	55	60	65	70
LENGTH (feet)	155	200	250	305	360	425	495	570	645	730

TRANSPORTABLE ATTENUATOR ROLL AHEAD DISTANCE = R					
HOST VEHICLE WEIGHT 9,900 TO 22,000 LBS.			HOST VEHICLE WEIGHT > 22,000 LBS.		
< 45 MPH	45-55 MPH	> 55 MPH	< 45 MPH	45-55 MPH	> 55 MPH
100'	123'	172'	74'	100'	150'

PROTECTIVE VEHICLE (WORK VEHICLE) = R
NO SPECIFIED DISTANCE REQUIRED

MINIMUM LANE CLOSURE TAPER LENGTH = L (feet)										
LANE WIDTH (feet)	Posted Speed (mph)									
	25	30	35	40	45	50	55	60	65	70
10	105	150	205	270	-	-	-	-	-	-
11	115	165	225	295	-	-	-	-	-	-
12	125	180	245	320	-	-	-	-	-	-

SIGN SPACING = X		
RURAL ROADS & URBAN ARTERIALS	35 / 40 MPH	350' ±
RURAL ROADS, URBAN ARTERIALS, RESIDENTIAL & BUSINESS DISTRICTS	25 / 30 MPH	200' ± (2)
URBAN STREETS	25 MPH OR LESS	100' ± (2)

(1) ALL SPACING MAY BE ADJUSTED TO ACCOMMODATE INTERCHANGE RAMPS, AT-GRADE INTERSECTIONS AND DRIVEWAYS.
(2) THIS SPACING MAY BE REDUCED IN URBAN AREAS TO FIT ROADWAY CONDITIONS.

LEGEND

- TEMPORARY SIGN LOCATION
- TRAFFIC SAFETY DRUM WITH TYPE C WARNING LIGHTS
- SEQUENTIAL ARROW SIGN
- TRANSPORTABLE ATTENUATOR
- PCMS — PORTABLE CHANGEABLE MESSAGE SIGN
- WORK ZONE
- TYPE 3 BARRICADE
- PROTECTIVE VEHICLE

CHANNELIZATION DEVICE SPACING (feet)		
MPH	TAPER	TANGENT
50/70	40	80
35/45	30	60
25/30	20	40

N

NOTES:

1. SEE SPECIAL PROVISIONS FOR CLOSURE HOUR RESTRICTIONS.
2. ALL SIGNS ARE BLACK ON ORANGE UNLESS OTHERWISE DESIGNATED.
3. SEE DETOUR PLAN ON SHEET DU4.
4. MINIMUM SHOULDER TAPER RATE = L/3.
5. NO FLAGGERS OR SPOTTERS ON I-5 OR THE RAMPS.

SB I-5 ON-RAMP CLOSURE

NOT TO SCALE

FILE NAME	U:\PSO\Projects\Clients\1598-TulalipTribes\554-1598-095 116th-Ph4-PSE\99Svcs\CADD\DGN\PS&ESheets\BL1598033_PS_TC.dgn
TIME	12:01:41 PM
DATE	8/25/2017
PLOTTED BY	purgabut
DESIGNED BY	M. TSUN
ENTERED BY	B. PURGANAN
CHECKED BY	D. PROCTOR
APPROVED BY	H. LONGFELLOW

REVISION	DATE	BY

REGION NO.	STATE	FED.AID PROJ.NO.
10	WASH	
JOB NUMBER		
CONTRACT NO.		LOCATION NO.

P.E. STAMP BOX — DATE

HARRY DAVID LONGFELLOW — STATE OF WASHINGTON — 37902 — REGISTERED PROFESSIONAL ENGINEER

P.E. STAMP BOX — DATE

TULALIP TRIBES — Parametrix

I-5 / 116TH STREET NE
INTERCHANGE IMPROVEMENTS
PHASE 4 RAMPS

TRAFFIC CONTROL PLAN

Plot 17
PLAN REF NO TC17
SHEET 220 OF 238 SHEETS

BUFFER DATA										
LONGITUDINAL BUFFER SPACE = B										
SPEED (MPH)	25	30	35	40	45	50	55	60	65	70
LENGTH (feet)	155	200	250	305	360	425	495	570	645	730

TRANSPORTABLE ATTENUATOR ROLL AHEAD DISTANCE = R					
HOST VEHICLE WEIGHT 9,900 TO 22,000 LBS.			HOST VEHICLE WEIGHT > 22,000 LBS.		
< 45 MPH	45-55 MPH	> 55 MPH	< 45 MPH	45-55 MPH	> 55 MPH
100'	123'	172'	74'	100'	150'

PROTECTIVE VEHICLE (WORK VEHICLE) = R
NO SPECIFIED DISTANCE REQUIRED

MINIMUM LANE CLOSURE TAPER LENGTH = L (feet)										
LANE WIDTH (feet)	Posted Speed (mph)									
	25	30	35	40	45	50	55	60	65	70
10	-	-	-	-	-	-	550	-	-	-
11	-	-	-	-	-	-	605	660	-	-
12	-	-	-	-	-	-	660	720	780	840

SIGN SPACING = X		
FREEWAYS & EXPRESSWAYS	55 / 70 MPH	1500' ± (OR AS PER MUTCD)

(1) ALL SPACING MAY BE ADJUSTED TO ACCOMMODATE INTERCHANGE RAMPS, AT-GRADE INTERSECTIONS AND DRIVEWAYS.
(2) THIS SPACING MAY BE REDUCED IN URBAN AREAS TO FIT ROADWAY CONDITIONS.

CHANNELIZATION DEVICE SPACING (feet)		
MPH	TAPER	TANGENT
50/70	40	80

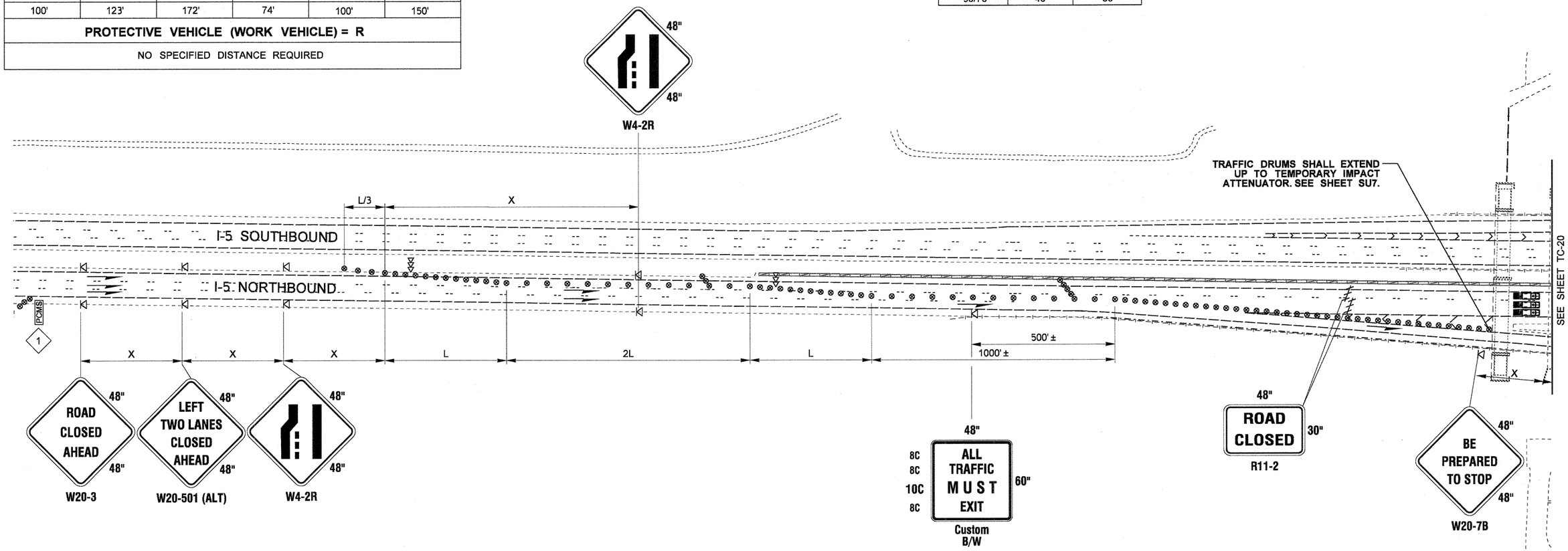

LEGEND

- TEMPORARY SIGN LOCATION
- TRAFFIC SAFETY DRUM WITH TYPE C WARNING LIGHTS
- SEQUENTIAL ARROW SIGN
- TRANSPORTABLE ATTENUATOR
- PCMS — PORTABLE CHANGEABLE MESSAGE SIGN
- WORK ZONE
- TYPE 3 BARRICADE
- PROTECTIVE VEHICLE

PCMS #1	
PHASE 1	PHASE 2
5 NORTH CLOSED AT 116TH	1.5 MILES AHEAD
2.0 SEC	2.0 SEC

FIELD LOCATE 1.5 MILES (+-) IN ADVANCE OF DETOUR EXIT

PCMS #2	
PHASE 1	
5 NORTH CLOSED AT 116TH	NO ACCESS TO 116TH
2.0 SEC	2.0 SEC

LOCATE ON NB I-5 1 MILE SOUTH OF EXIT 200 (88TH ST)

NOTES:

1. SEE SPECIAL PROVISIONS FOR CLOSURE HOUR RESTRICTIONS.
2. ALL SIGNS ARE BLACK ON ORANGE UNLESS OTHERWISE DESIGNATED.
3. MINIMUM SHOULDER TAPER RATE = L/3.
4. NO FLAGGERS OR SPOTTERS ON I-5 OR THE RAMPS.
5. THIS PLAN WILL BE IMPLIMENTED IN CONJUNCTION WITH 116TH BRIDGE CLOSURE (TC20).

60" ROAD WILL BE CLOSED MON DA - MON DA XPM XAM 48"

R11-1501 (MOD) B/W INSTALL ALONG NORTHBOUND I-5 5 DAYS MIN. PRIOR TO CLOSURE

FULL I-5 CLOSURE

NOT TO SCALE

FILE NAME	U:\PSO\Projects\Clients\1598-TulalipTribes\554-1598-095 116th-Ph4-PSE\99Svcs\CADD\DGN\PS&ESheets\BL1598033_PS_TC.dgn
TIME	12:01:58 PM
DATE	8/25/2017
PLOTTED BY	purgabut
DESIGNED BY	M. TSUN
ENTERED BY	B. PURGANAN
CHECKED BY	D. PROCTOR
APPROVED BY	H. LONGFELLOW

REVISION	DATE	BY

REGION NO.	STATE	FED.AID PROJ.NO.
10	WASH	
JOB NUMBER		
CONTRACT NO.		LOCATION NO.

P.E. STAMP BOX — DATE

HARRY DAVID LONGFELLOW — STATE OF WASHINGTON — 23502 — REGISTERED PROFESSIONAL ENGINEER

P.E. STAMP BOX — DATE

TULALIP TRIBES — Parametrix

I-5 / 116TH STREET NE INTERCHANGE IMPROVEMENTS PHASE 4 RAMPS

TRAFFIC CONTROL PLAN

Plot 18

PLAN REF NO TC18

SHEET 221 OF 238 SHEETS

BUFFER DATA										
LONGITUDINAL BUFFER SPACE = B										
SPEED (MPH)	25	30	35	40	45	50	55	60	65	70
LENGTH (feet)	155	200	250	305	360	425	495	570	645	730

TRANSPORTABLE ATTENUATOR ROLL AHEAD DISTANCE = R					
HOST VEHICLE WEIGHT 9,900 TO 22,000 LBS.			HOST VEHICLE WEIGHT > 22,000 LBS.		
< 45 MPH	45-55 MPH	> 55 MPH	< 45 MPH	45-55 MPH	> 55 MPH
100'	123'	172'	74'	100'	150'

PROTECTIVE VEHICLE (WORK VEHICLE) = R
NO SPECIFIED DISTANCE REQUIRED

MINIMUM LANE CLOSURE TAPER LENGTH = L (feet)										
LANE WIDTH (feet)	Posted Speed (mph)									
	25	30	35	40	45	50	55	60	65	70
10	-	-	-	-	-	-	550	-	-	-
11	-	-	-	-	-	-	605	660	-	-
12	-	-	-	-	-	-	660	720	780	840

SIGN SPACING = X		
FREEWAYS & EXPRESSWAYS	55 / 70 MPH	1500' ± (OR AS PER MUTCD)

(1) ALL SPACING MAY BE ADJUSTED TO ACCOMMODATE INTERCHANGE RAMPS, AT-GRADE INTERSECTIONS AND DRIVEWAYS.
(2) THIS SPACING MAY BE REDUCED IN URBAN AREAS TO FIT ROADWAY CONDITIONS.

CHANNELIZATION DEVICE SPACING (feet)		
MPH	TAPER	TANGENT
50/70	40	80

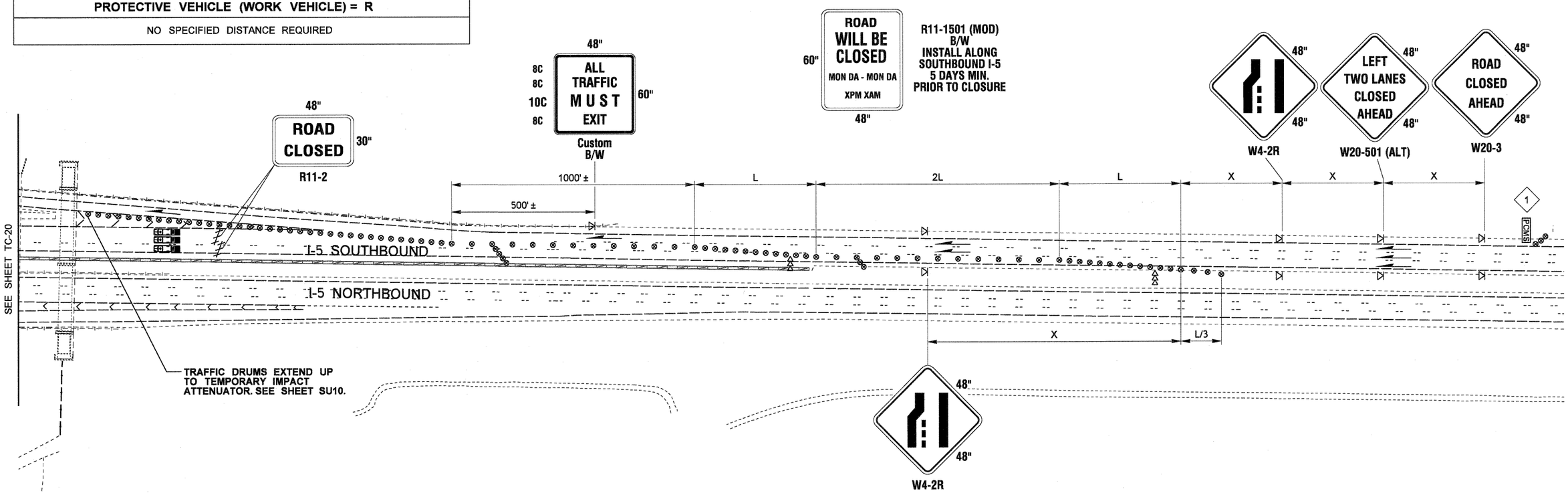

LEGEND

- TEMPORARY SIGN LOCATION
- TRAFFIC SAFETY DRUM WITH TYPE C WARNING LIGHTS
- SEQUENTIAL ARROW SIGN
- TRANSPORTABLE ATTENUATOR
- PORTABLE CHANGEABLE MESSAGE SIGN
- WORK ZONE
- TYPE 3 BARRICADE
- PROTECTIVE VEHICLE

PCMS #1	
PHASE 1	PHASE 2
5 SOUTH CLOSED AT 116TH	1.5 MILES AHEAD
2.0 SEC	2.0 SEC

FIELD LOCATE 1 MILE (+-) IN ADVANCE OF DETOUR EXIT

PCMS #2	
PHASE 1	
5 SOUTH CLOSED AT 116TH	NO ACCESS TO 116TH
2.0 SEC	2.0 SEC

LOCATE ON SB I-5 1 MILE NORTH OF EXIT 206 (172ND ST)

NOTES:

1. SEE SPECIAL PROVISIONS FOR CLOSURE HOUR RESTRICTIONS.
2. ALL SIGNS ARE BLACK ON ORANGE UNLESS OTHERWISE DESIGNATED.
3. MINIMUM SHOULDER TAPER RATE = L/3.
4. NO FLAGGERS OR SPOTTERS ON I-5 OR THE RAMPS.
5. THIS PLAN WILL BE IMPLIMENTED IN CONJUNCTION WITH 116TH BRIDGE CLOSURE (TC20).

FULL I-5 CLOSURE

NOT TO SCALE

FILE NAME	U:\PSO\Projects\Clients\1598-TulalipTribes\554-1598-095 116th-Ph4-PSE\99Svcs\CADD\DGN\PS&ESheets\BL1598033_PS_TC.dgn
TIME	12:02:12 PM
DATE	8/25/2017
PLOTTED BY	purgabut
DESIGNED BY	M. TSUN
ENTERED BY	B. PURGANAN
CHECKED BY	D. PROCTOR
APPROVED BY	H. LONGFELLOW

REVISION	DATE	BY

REGION NO.	STATE	FED.AID PROJ.NO.
10	WASH	
JOB NUMBER		
CONTRACT NO.		LOCATION NO.

P.E. STAMP BOX DATE

P.E. STAMP BOX DATE

TULALIP TRIBES Parametrix

I-5 / 116TH STREET NE INTERCHANGE IMPROVEMENTS PHASE 4 RAMPS

TRAFFIC CONTROL PLAN

Plot 19

PLAN REF NO TC19

SHEET 222 OF 238 SHEETS

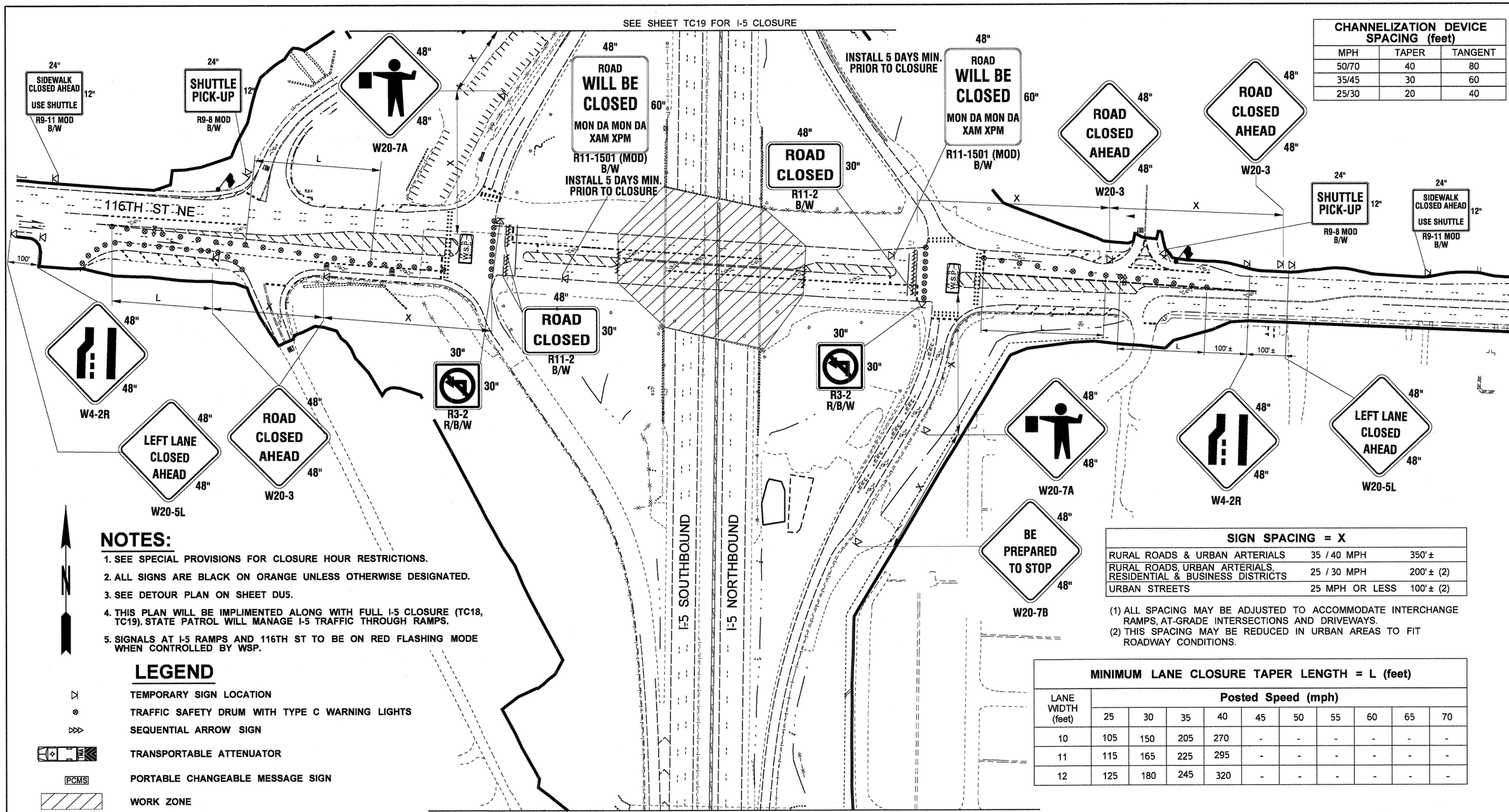

CHANNELIZATION DEVICE SPACING (feet)		
MPH	TAPER	TANGENT
50/70	40	80
35/45	30	60
25/30	20	40

NOTES:

1. SEE SPECIAL PROVISIONS FOR CLOSURE HOUR RESTRICTIONS.
2. ALL SIGNS ARE BLACK ON ORANGE UNLESS OTHERWISE DESIGNATED.
3. SEE DETOUR PLAN ON SHEET DU5.
4. THIS PLAN WILL BE IMPLIMENTED ALONG WITH FULL I-5 CLOSURE (TC18, TC19). STATE PATROL WILL MANAGE I-5 TRAFFIC THROUGH RAMPS.
5. SIGNALS AT I-5 RAMPS AND 116TH ST TO BE ON RED FLASHING MODE WHEN CONTROLLED BY WSP.

LEGEND

- TEMPORARY SIGN LOCATION
- TRAFFIC SAFETY DRUM WITH TYPE C WARNING LIGHTS
- SEQUENTIAL ARROW SIGN
- TRANSPORTABLE ATTENUATOR
- PCMS — PORTABLE CHANGEABLE MESSAGE SIGN
- WORK ZONE
- TYPE 3 BARRICADE
- FLAGGER STATION
- W.S.P. — LAW ENFORCEMENT FLAGGER

SIGN SPACING = X		
RURAL ROADS & URBAN ARTERIALS	35 / 40 MPH	350'±
RURAL ROADS, URBAN ARTERIALS, RESIDENTIAL & BUSINESS DISTRICTS	25 / 30 MPH	200'± (2)
URBAN STREETS	25 MPH OR LESS	100'± (2)

(1) ALL SPACING MAY BE ADJUSTED TO ACCOMMODATE INTERCHANGE RAMPS, AT-GRADE INTERSECTIONS AND DRIVEWAYS.
(2) THIS SPACING MAY BE REDUCED IN URBAN AREAS TO FIT ROADWAY CONDITIONS.

MINIMUM LANE CLOSURE TAPER LENGTH = L (feet)										
LANE WIDTH (feet)	Posted Speed (mph)									
	25	30	35	40	45	50	55	60	65	70
10	105	150	205	270	-	-	-	-	-	-
11	115	165	225	295	-	-	-	-	-	-
12	125	180	245	320	-	-	-	-	-	-

116TH ST NE BRIDGE CLOSURE

NOT TO SCALE

FILE NAME	U:\PSO\Projects\Clients\1598-TulalipTribes\554-1598-095 116th-Ph4-PSE\99Svcs\CADD\DGN\PS&ESheets\BL1598033_PS_TC.dgn					
TIME	12:02:26 PM				REGION NO. 10	STATE WASH	FED.AID PROJ.NO.
DATE	8/25/2017				JOB NUMBER	
PLOTTED BY	purgabut					
DESIGNED BY	M. TSUN				CONTRACT NO.	LOCATION NO.
ENTERED BY	B. PURGANAN					
CHECKED BY	X					
APPROVED BY	H. LONGFELLOW					
REGIONAL ADM.		REVISION	DATE	BY		

P.E. STAMP BOX — DATE

P.E. STAMP BOX — DATE

TULALIP TRIBES
Parametrix

I-5 / 116TH STREET NE
INTERCHANGE IMPROVEMENTS
PHASE 4 RAMPS

TRAFFIC CONTROL PLAN

Plot 22
PLAN REF NO TC20
SHEET 223 OF 238 SHEETS

BUFFER DATA										
LONGITUDINAL BUFFER SPACE = B										
SPEED (MPH)	25	30	35	40	45	50	55	60	65	70
LENGTH (feet)	155	200	250	305	360	425	495	570	645	730

TRANSPORTABLE ATTENUATOR ROLL AHEAD DISTANCE = R					
HOST VEHICLE WEIGHT 9,900 TO 22,000 LBS.			HOST VEHICLE WEIGHT > 22,000 LBS.		
< 45 MPH	45-55 MPH	> 55 MPH	< 45 MPH	45-55 MPH	> 55 MPH
100'	123'	172'	74'	100'	150'

PROTECTIVE VEHICLE (WORK VEHICLE) = R
NO SPECIFIED DISTANCE REQUIRED

MINIMUM LANE CLOSURE TAPER LENGTH = L (feet)										
LANE WIDTH (feet)	Posted Speed (mph)									
	25	30	35	40	45	50	55	60	65	70
10	-	-	-	-	-	-	550	-	-	-
11	-	-	-	-	-	-	605	660	-	-
12	-	-	-	-	-	-	660	720	780	840

CHANNELIZATION DEVICE SPACING (feet)		
MPH	TAPER	TANGENT
50/70	40	80

PCMS	
PHASE 1	PHASE 2
RIGHT LANE CLOSED	ONE MILE AHEAD
2.0 SEC	2.0 SEC

FIELD LOCATE 1 MILE (+-) IN ADVANCE OF LANE CLOSURE

SIGN SPACING = X		
FREEWAYS & EXPRESSWAYS	55 / 70 MPH	1500' ± (OR AS PER MUTCD)

(1) ALL SPACING MAY BE ADJUSTED TO ACCOMMODATE INTERCHANGE RAMPS, AT-GRADE INTERSECTIONS AND DRIVEWAYS.
(2) THIS SPACING MAY BE REDUCED IN URBAN AREAS TO FIT ROADWAY CONDITIONS.

NOTES:

1. SEE SPECIAL PROVISIONS FOR CLOSURE HOUR RESTRICTIONS.
2. ALL SIGNS ARE BLACK ON ORANGE UNLESS OTHERWISE DESIGNATED.
3. MINIMUM SHOULDER TAPER RATE = L/3.
4. NO FLAGGERS OR SPOTTERS ON I-5 OR THE RAMPS.

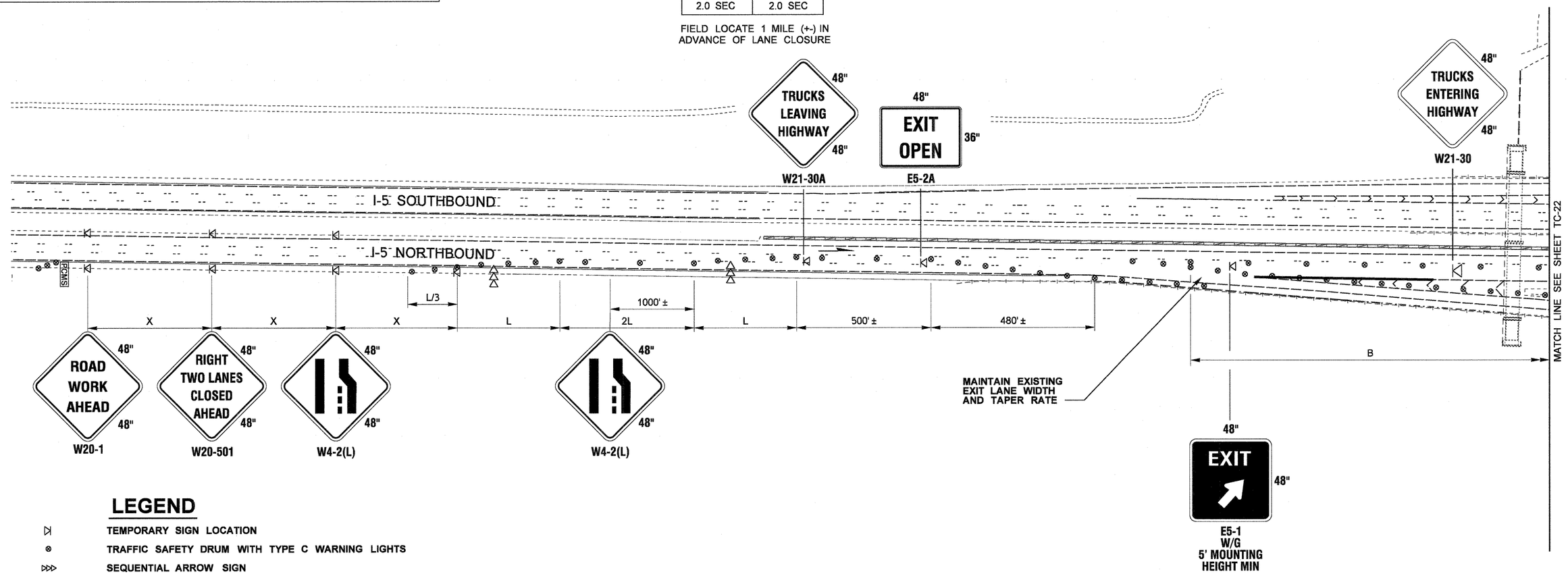

LEGEND

- TEMPORARY SIGN LOCATION
- TRAFFIC SAFETY DRUM WITH TYPE C WARNING LIGHTS
- SEQUENTIAL ARROW SIGN
- TRANSPORTABLE ATTENUATOR
- PCMS — PORTABLE CHANGEABLE MESSAGE SIGN
- WORK ZONE
- TYPE 3 BARRICADE
- PROTECTIVE VEHICLE

NB DOUBLE OUTSIDE LANE CLOSURE AT INTERCHANGE

NOT TO SCALE

FILE NAME	U:\PSO\Projects\Clients\1598-TulalipTribes\554-1598-095 116th-Ph4-PSE\99Svcs\CADD\DGN\PS&ESheets\BL1598033_PS_TC.dgn
TIME	12:02:40 PM
DATE	8/25/2017
PLOTTED BY	purgabut
DESIGNED BY	M. TSUN
ENTERED BY	B. PURGANAN
CHECKED BY	D. PROCTOR
APPROVED BY	H. LONGFELLOW

REVISION	DATE	BY

REGION NO.	STATE	FED.AID PROJ.NO.
10	WASH	
JOB NUMBER		
CONTRACT NO.		LOCATION NO.

P.E. STAMP BOX — DATE

STATE OF WASHINGTON — HARRY DAVID LONGFELLOW — 37502 — REGISTERED PROFESSIONAL ENGINEER

P.E. STAMP BOX — DATE

TULALIP TRIBES — Parametrix

I-5 / 116TH STREET NE INTERCHANGE IMPROVEMENTS PHASE 4 RAMPS

TRAFFIC CONTROL PLAN

Plot 8

PLAN REF NO TC21

SHEET 224 OF 238 SHEETS

MINIMUM LANE CLOSURE TAPER LENGTH = L (feet)										
LANE WIDTH (feet)	Posted Speed (mph)									
	25	30	35	40	45	50	55	60	65	70
10	-	-	-	-	-	-	550	-	-	-
11	-	-	-	-	-	-	605	660	-	-
12	-	-	-	-	-	-	660	720	780	840

BUFFER DATA										
LONGITUDINAL BUFFER SPACE = B										
SPEED (MPH)	25	30	35	40	45	50	55	60	65	70
LENGTH (feet)	155	200	250	305	360	425	495	570	645	730

TRANSPORTABLE ATTENUATOR ROLL AHEAD DISTANCE = R					
HOST VEHICLE WEIGHT 9,900 TO 22,000 LBS.			HOST VEHICLE WEIGHT > 22,000 LBS.		
< 45 MPH	45-55 MPH	> 55 MPH	< 45 MPH	45-55 MPH	> 55 MPH
100'	123'	172'	74'	100'	150'

PROTECTIVE VEHICLE (WORK VEHICLE) = R
NO SPECIFIED DISTANCE REQUIRED

LEGEND

- TEMPORARY SIGN LOCATION
- TRAFFIC SAFETY DRUM WITH TYPE C WARNING LIGHTS
- SEQUENTIAL ARROW SIGN
- TRANSPORTABLE ATTENUATOR
- PCMS — PORTABLE CHANGEABLE MESSAGE SIGN
- WORK ZONE
- TYPE 3 BARRICADE

CHANNELIZATION DEVICE SPACING (feet)		
MPH	TAPER	TANGENT
50/70	40	80

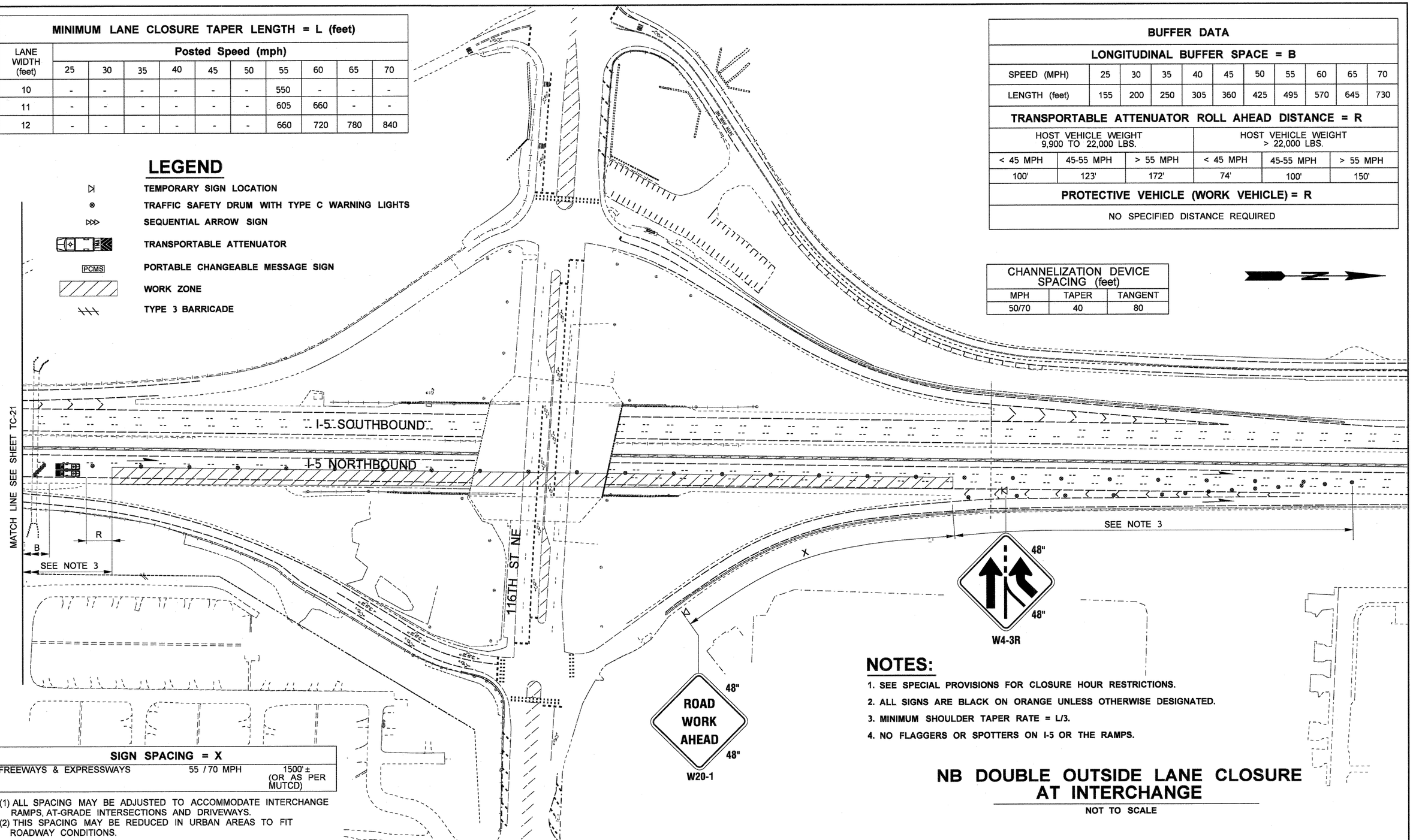

SIGN SPACING = X		
FREEWAYS & EXPRESSWAYS	55 / 70 MPH	1500' ± (OR AS PER MUTCD)

(1) ALL SPACING MAY BE ADJUSTED TO ACCOMMODATE INTERCHANGE RAMPS, AT-GRADE INTERSECTIONS AND DRIVEWAYS.
(2) THIS SPACING MAY BE REDUCED IN URBAN AREAS TO FIT ROADWAY CONDITIONS.

NOTES:

1. SEE SPECIAL PROVISIONS FOR CLOSURE HOUR RESTRICTIONS.
2. ALL SIGNS ARE BLACK ON ORANGE UNLESS OTHERWISE DESIGNATED.
3. MINIMUM SHOULDER TAPER RATE = L/3.
4. NO FLAGGERS OR SPOTTERS ON I-5 OR THE RAMPS.

NB DOUBLE OUTSIDE LANE CLOSURE AT INTERCHANGE

NOT TO SCALE

FILE NAME	U:\PSO\Projects\Clients\1598-TulalipTribes\554-1598-095 116th-Ph4-PSE\99Svcs\CADD\DGN\PS&ESheets\BL1598033_PS_TC.dgn
TIME	12:02:53 PM
DATE	8/25/2017
PLOTTED BY	purgabut
DESIGNED BY	M. TSUN
ENTERED BY	B. PURGANAN
CHECKED BY	D. PROCTOR
APPROVED BY	H. LONGFELLOW

REVISION	DATE	BY

REGION NO.	STATE	FED.AID PROJ.NO.
10	WASH	
JOB NUMBER		
CONTRACT NO.		LOCATION NO.

P.E. STAMP BOX — DATE

STATE OF WASHINGTON — HARRY DAVID LONGFELLOW — 37902 — REGISTERED PROFESSIONAL ENGINEER

P.E. STAMP BOX — DATE

TULALIP TRIBES — Parametrix

I-5 / 116TH STREET NE
INTERCHANGE IMPROVEMENTS
PHASE 4 RAMPS

TRAFFIC CONTROL PLAN

Plot 9

PLAN REF NO TC22

SHEET 225 OF 238 SHEETS

MINIMUM LANE CLOSURE TAPER LENGTH = L (feet)										
LANE WIDTH (feet)	Posted Speed (mph)									
	25	30	35	40	45	50	55	60	65	70
10	-	-	-	-	-	-	550	-	-	-
11	-	-	-	-	-	-	605	660	-	-
12	-	-	-	-	-	-	660	720	780	840

SIGN SPACING = X		
FREEWAYS & EXPRESSWAYS	55 / 70 MPH	1500' ± (OR AS PER MUTCD)

(1) ALL SPACING MAY BE ADJUSTED TO ACCOMMODATE INTERCHANGE RAMPS, AT-GRADE INTERSECTIONS AND DRIVEWAYS.
(2) THIS SPACING MAY BE REDUCED IN URBAN AREAS TO FIT ROADWAY CONDITIONS.

CHANNELIZATION DEVICE SPACING (feet)		
MPH	TAPER	TANGENT
50/70	40	80

NOTES:

1. SEE SPECIAL PROVISIONS FOR CLOSURE HOUR RESTRICTIONS.
2. ALL SIGNS ARE BLACK ON ORANGE UNLESS OTHERWISE DESIGNATED.
3. MINIMUM SHOULDER TAPER RATE = L/3.
4. NO FLAGGERS OR SPOTTERS ON I-5 OR THE RAMPS.

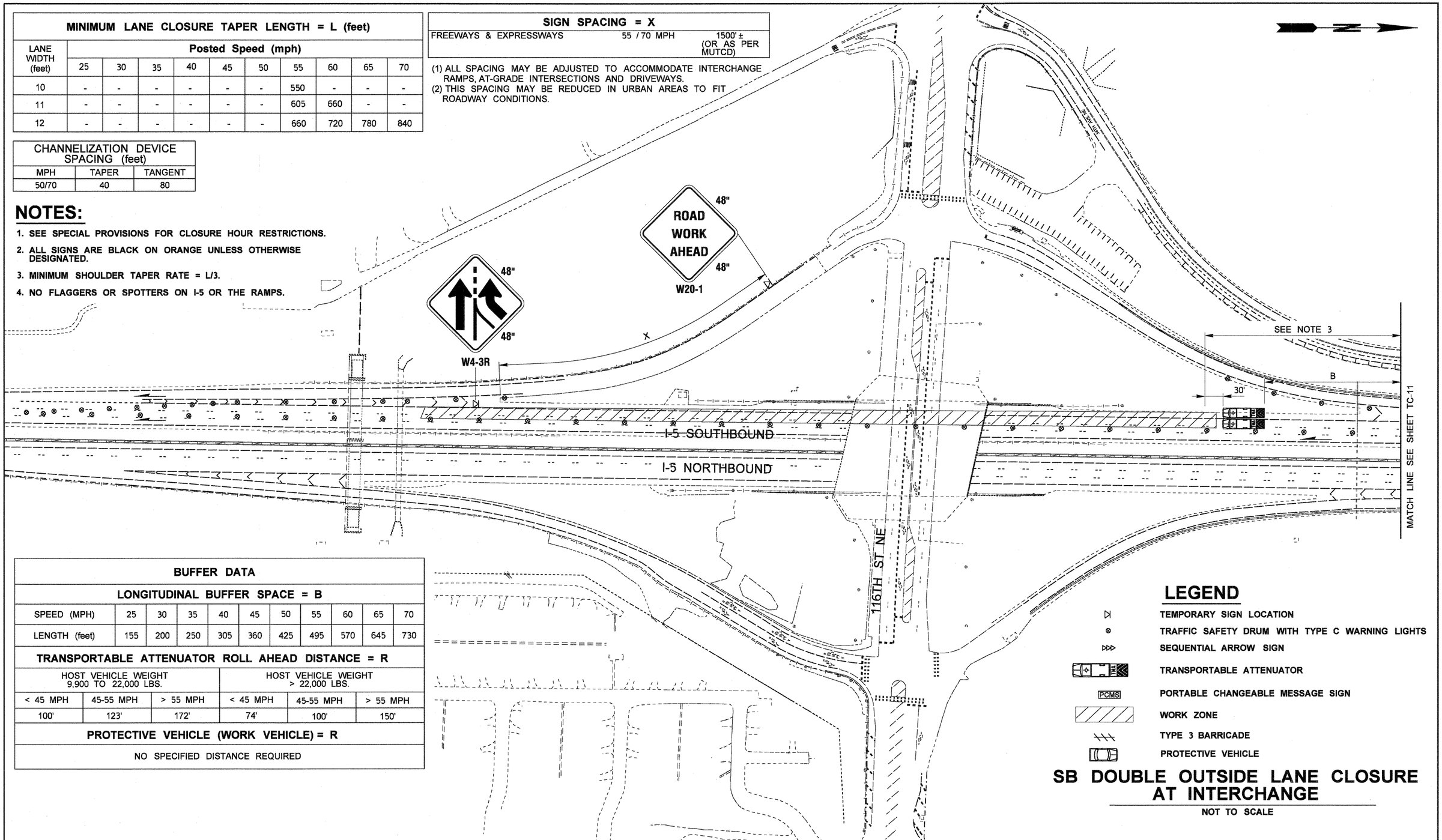

BUFFER DATA										
LONGITUDINAL BUFFER SPACE = B										
SPEED (MPH)	25	30	35	40	45	50	55	60	65	70
LENGTH (feet)	155	200	250	305	360	425	495	570	645	730

TRANSPORTABLE ATTENUATOR ROLL AHEAD DISTANCE = R					
HOST VEHICLE WEIGHT 9,900 TO 22,000 LBS.			HOST VEHICLE WEIGHT > 22,000 LBS.		
< 45 MPH	45-55 MPH	> 55 MPH	< 45 MPH	45-55 MPH	> 55 MPH
100'	123'	172'	74'	100'	150'

PROTECTIVE VEHICLE (WORK VEHICLE) = R
NO SPECIFIED DISTANCE REQUIRED

LEGEND

- TEMPORARY SIGN LOCATION
- TRAFFIC SAFETY DRUM WITH TYPE C WARNING LIGHTS
- SEQUENTIAL ARROW SIGN
- TRANSPORTABLE ATTENUATOR
- PCMS — PORTABLE CHANGEABLE MESSAGE SIGN
- WORK ZONE
- TYPE 3 BARRICADE
- PROTECTIVE VEHICLE

SB DOUBLE OUTSIDE LANE CLOSURE AT INTERCHANGE

NOT TO SCALE

FILE NAME	U:\PSO\Projects\Clients\1598-TulalipTribes\554-1598-095 116th-Ph4-PSE\99Svcs\CADD\DGN\PS&ESheets\BL1598033_PS_TC.dgn
TIME	12:03:08 PM
DATE	8/25/2017
PLOTTED BY	purgabut
DESIGNED BY	M. TSUN
ENTERED BY	B. PURGANAN
CHECKED BY	D. PROCTOR
APPROVED BY	H. LONGFELLOW

REVISION	DATE	BY

REGION NO.	STATE	FED.AID PROJ.NO.
10	WASH	
JOB NUMBER		
CONTRACT NO.		LOCATION NO.

P.E. STAMP BOX — DATE

HARRY DAVID LONGFELLOW — STATE OF WASHINGTON — 37502 — REGISTERED PROFESSIONAL ENGINEER

P.E. STAMP BOX — DATE

TULALIP TRIBES — Parametrix

I-5 / 116TH STREET NE
INTERCHANGE IMPROVEMENTS
PHASE 4 RAMPS

TRAFFIC CONTROL PLAN

Plot 10

PLAN REF NO TC23

SHEET 226 OF 238 SHEETS

BUFFER DATA										
LONGITUDINAL BUFFER SPACE = B										
SPEED (MPH)	25	30	35	40	45	50	55	60	65	70
LENGTH (feet)	155	200	250	305	360	425	495	570	645	730

TRANSPORTABLE ATTENUATOR ROLL AHEAD DISTANCE = R					
HOST VEHICLE WEIGHT 9,900 TO 22,000 LBS.			HOST VEHICLE WEIGHT > 22,000 LBS.		
< 45 MPH	45-55 MPH	> 55 MPH	< 45 MPH	45-55 MPH	> 55 MPH
100'	123'	172'	74'	100'	150'

PROTECTIVE VEHICLE (WORK VEHICLE) = R
NO SPECIFIED DISTANCE REQUIRED

MINIMUM LANE CLOSURE TAPER LENGTH = L (feet)										
LANE WIDTH (feet)	Posted Speed (mph)									
	25	30	35	40	45	50	55	60	65	70
10	-	-	-	-	-	-	550	-	-	-
11	-	-	-	-	-	-	605	660	-	-
12	-	-	-	-	-	-	660	720	780	840

CHANNELIZATION DEVICE SPACING (feet)		
MPH	TAPER	TANGENT
50/70	40	80

PCMS	
PHASE 1	PHASE 2
RIGHT LANE CLOSED	ONE MILE AHEAD
2.0 SEC	2.0 SEC

FIELD LOCATE 1 MILE (+-) IN ADVANCE OF LANE CLOSURE

SIGN SPACING = X		
FREEWAYS & EXPRESSWAYS	55 / 70 MPH	1500' ± (OR AS PER MUTCD)

(1) ALL SPACING MAY BE ADJUSTED TO ACCOMMODATE INTERCHANGE RAMPS, AT-GRADE INTERSECTIONS AND DRIVEWAYS.
(2) THIS SPACING MAY BE REDUCED IN URBAN AREAS TO FIT ROADWAY CONDITIONS.

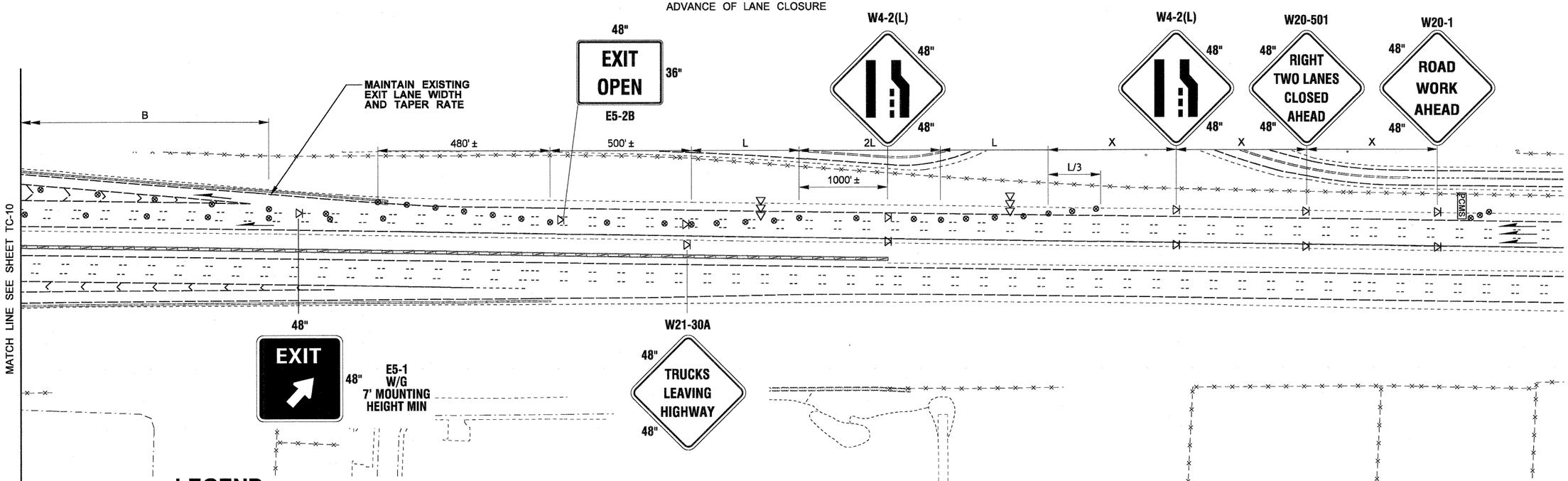

LEGEND

- TEMPORARY SIGN LOCATION
- TRAFFIC SAFETY DRUM WITH TYPE C WARNING LIGHTS
- SEQUENTIAL ARROW SIGN
- TRANSPORTABLE ATTENUATOR
- PCMS — PORTABLE CHANGEABLE MESSAGE SIGN
- WORK ZONE
- TYPE 3 BARRICADE
- PROTECTIVE VEHICLE

NOTES:

1. SEE SPECIAL PROVISIONS FOR CLOSURE HOUR RESTRICTIONS.
2. ALL SIGNS ARE BLACK ON ORANGE UNLESS OTHERWISE DESIGNATED.
3. MINIMUM SHOULDER TAPER RATE = L/3.
4. NO FLAGGERS OR SPOTTERS ON I-5 OR THE RAMPS.

SB DOUBLE OUTSIDE LANE CLOSURE AT INTERCHANGE

NOT TO SCALE

FILE NAME	U:\PSO\Projects\Clients\1598-TulalipTribes\554-1598-095 116th-Ph4-PSE\99Svcs\CADD\DGN\PS&ESheets\BL1598033_PS_TC.dgn
TIME	12:03:22 PM
DATE	8/25/2017
PLOTTED BY	purgabut
DESIGNED BY	M. TSUN
ENTERED BY	B. PURGANAN
CHECKED BY	D. PROCTOR
APPROVED BY	H. LONGFELLOW

REVISION	DATE	BY

REGION NO.	STATE	FED.AID PROJ.NO.
10	WASH	
JOB NUMBER		
CONTRACT NO.		LOCATION NO.

P.E. STAMP BOX — DATE

HARRY DAVID LONGFELLOW — STATE OF WASHINGTON — 20827 — REGISTERED PROFESSIONAL ENGINEER

P.E. STAMP BOX — DATE

TULALIP TRIBES — Parametrix

I-5 / 116TH STREET NE
INTERCHANGE IMPROVEMENTS
PHASE 4 RAMPS

TRAFFIC CONTROL PLAN

PLAN REF NO TC24

SHEET 227 OF 238 SHEETS

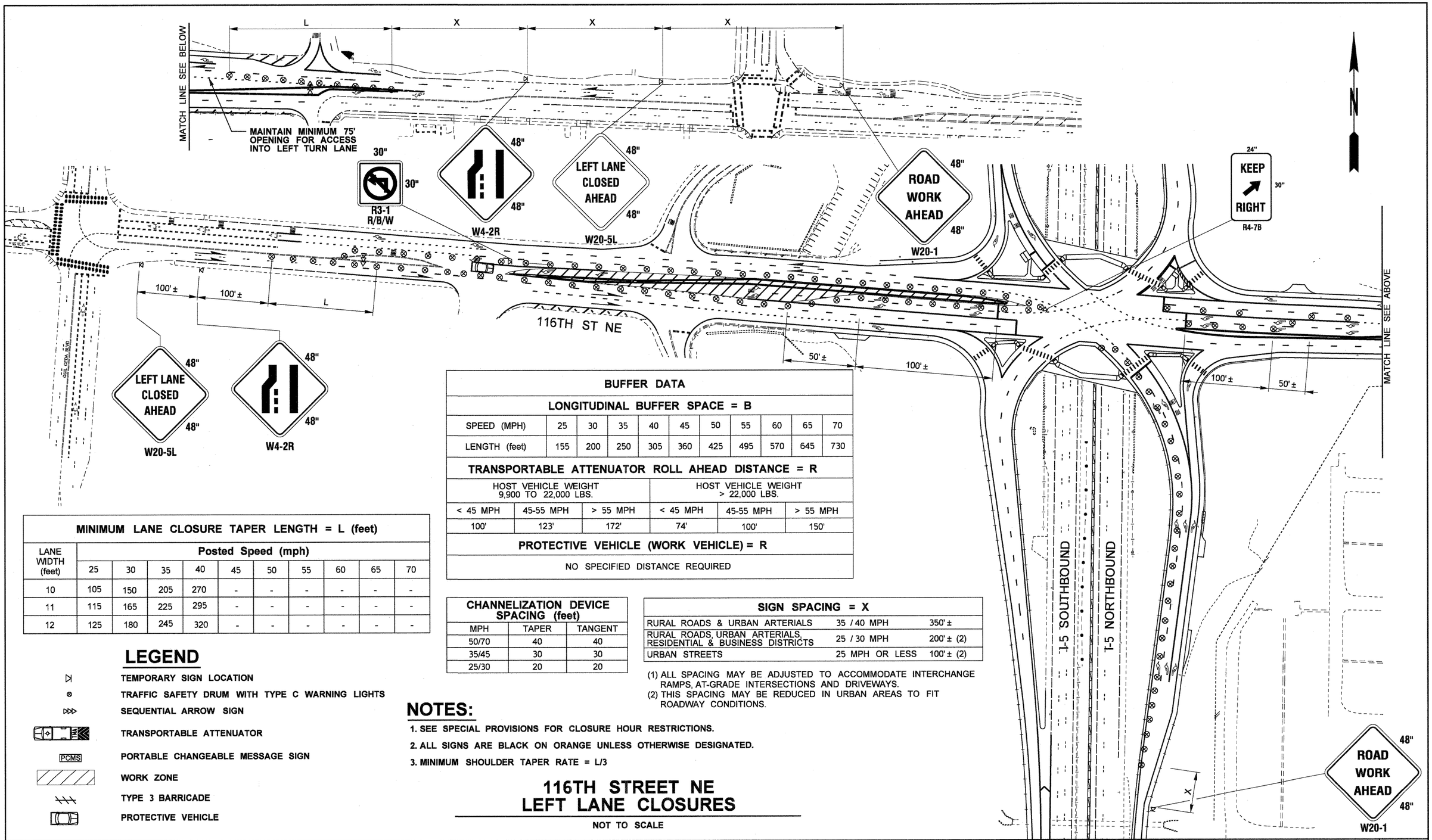

BUFFER DATA										
LONGITUDINAL BUFFER SPACE = B										
SPEED (MPH)	25	30	35	40	45	50	55	60	65	70
LENGTH (feet)	155	200	250	305	360	425	495	570	645	730

TRANSPORTABLE ATTENUATOR ROLL AHEAD DISTANCE = R					
HOST VEHICLE WEIGHT 9,900 TO 22,000 LBS.			HOST VEHICLE WEIGHT > 22,000 LBS.		
< 45 MPH	45-55 MPH	> 55 MPH	< 45 MPH	45-55 MPH	> 55 MPH
100'	123'	172'	74'	100'	150'

PROTECTIVE VEHICLE (WORK VEHICLE) = R
NO SPECIFIED DISTANCE REQUIRED

MINIMUM LANE CLOSURE TAPER LENGTH = L (feet)										
LANE WIDTH (feet)	Posted Speed (mph)									
	25	30	35	40	45	50	55	60	65	70
10	105	150	205	270	-	-	-	-	-	-
11	115	165	225	295	-	-	-	-	-	-
12	125	180	245	320	-	-	-	-	-	-

CHANNELIZATION DEVICE SPACING (feet)		
MPH	TAPER	TANGENT
50/70	40	40
35/45	30	30
25/30	20	20

SIGN SPACING = X		
RURAL ROADS & URBAN ARTERIALS	35 / 40 MPH	350' ±
RURAL ROADS, URBAN ARTERIALS, RESIDENTIAL & BUSINESS DISTRICTS	25 / 30 MPH	200' ± (2)
URBAN STREETS	25 MPH OR LESS	100' ± (2)

(1) ALL SPACING MAY BE ADJUSTED TO ACCOMMODATE INTERCHANGE RAMPS, AT-GRADE INTERSECTIONS AND DRIVEWAYS.
(2) THIS SPACING MAY BE REDUCED IN URBAN AREAS TO FIT ROADWAY CONDITIONS.

LEGEND

- TEMPORARY SIGN LOCATION
- TRAFFIC SAFETY DRUM WITH TYPE C WARNING LIGHTS
- SEQUENTIAL ARROW SIGN
- TRANSPORTABLE ATTENUATOR
- PCMS — PORTABLE CHANGEABLE MESSAGE SIGN
- WORK ZONE
- TYPE 3 BARRICADE
- PROTECTIVE VEHICLE

NOTES:

1. SEE SPECIAL PROVISIONS FOR CLOSURE HOUR RESTRICTIONS.
2. ALL SIGNS ARE BLACK ON ORANGE UNLESS OTHERWISE DESIGNATED.
3. MINIMUM SHOULDER TAPER RATE = L/3

116TH STREET NE LEFT LANE CLOSURES

NOT TO SCALE

FILE NAME	U:\PSO\Projects\Clients\1598-TulalipTribes\554-1598-095 116th-Ph4-PSE\99Svcs\CADD\DGN\PS&ESheets\BL1598033_PS_TC2.dgn
TIME	12:04:43 PM
DATE	8/25/2017
PLOTTED BY	purgabut
DESIGNED BY	M. TSUN
ENTERED BY	B. PURGANAN
CHECKED BY	D. PROCTOR
APPROVED BY	H. LONGFELLOW

REVISION	DATE	BY

REGION NO.	STATE	FED.AID PROJ.NO.
10	WASH	
JOB NUMBER		
CONTRACT NO.		LOCATION NO.

P.E. STAMP BOX — DATE

HARRY DAVID LONGFELLOW — STATE OF WASHINGTON — 37702 — REGISTERED PROFESSIONAL ENGINEER — DATE — P.E. STAMP BOX

TULALIP TRIBES — Parametrix

I-5 / 116TH STREET NE INTERCHANGE IMPROVEMENTS PHASE 4 RAMPS

TRAFFIC CONTROL PLAN

Plot 1

PLAN REF NO TC25

SHEET 228 OF 238 SHEETS

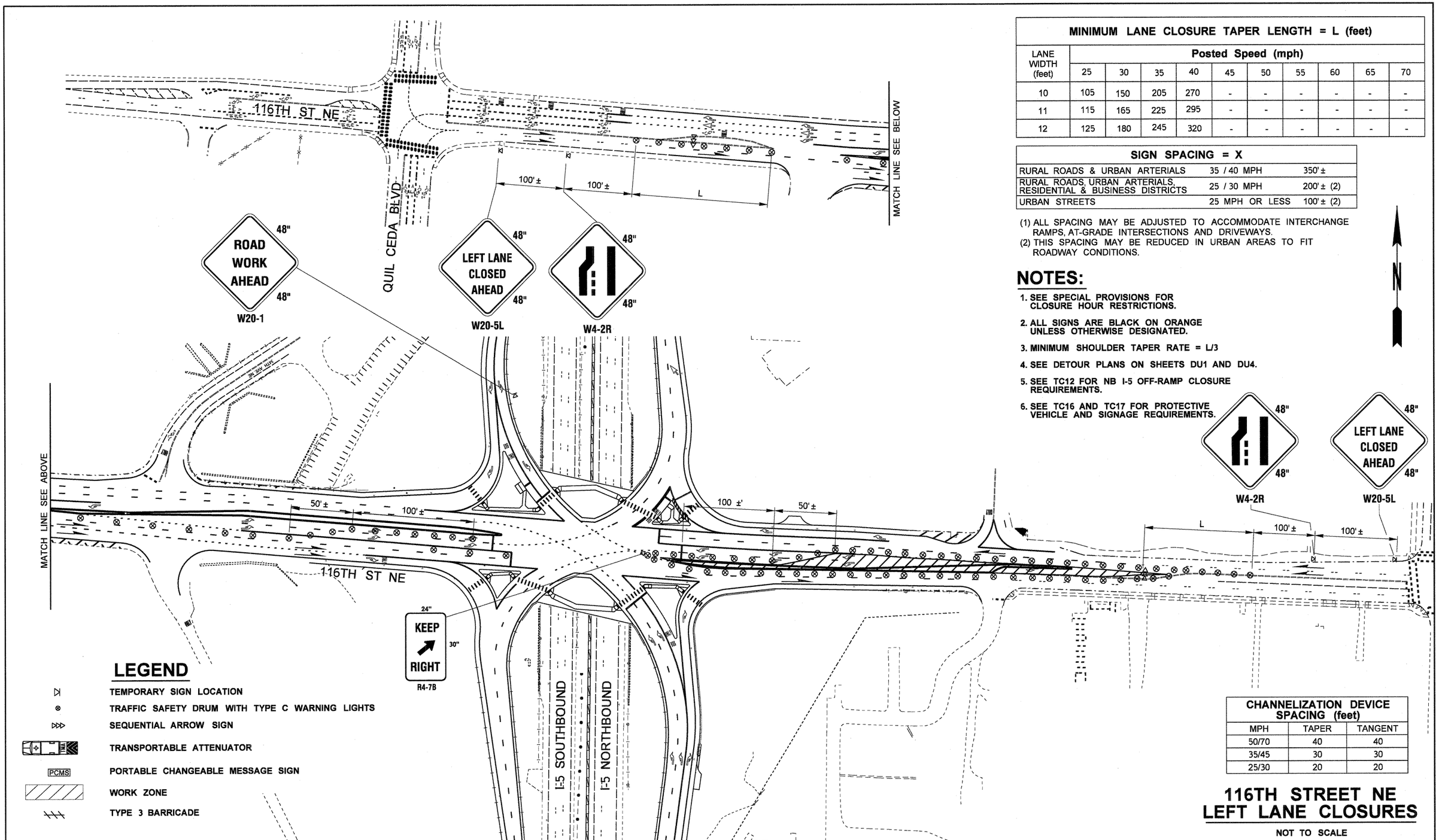

MINIMUM LANE CLOSURE TAPER LENGTH = L (feet)										
LANE WIDTH (feet)	Posted Speed (mph)									
	25	30	35	40	45	50	55	60	65	70
10	105	150	205	270	-	-	-	-	-	-
11	115	165	225	295	-	-	-	-	-	-
12	125	180	245	320	-	-	-	-	-	-

SIGN SPACING = X		
RURAL ROADS & URBAN ARTERIALS	35 / 40 MPH	350' ±
RURAL ROADS, URBAN ARTERIALS, RESIDENTIAL & BUSINESS DISTRICTS	25 / 30 MPH	200' ± (2)
URBAN STREETS	25 MPH OR LESS	100' ± (2)

(1) ALL SPACING MAY BE ADJUSTED TO ACCOMMODATE INTERCHANGE RAMPS, AT-GRADE INTERSECTIONS AND DRIVEWAYS.
(2) THIS SPACING MAY BE REDUCED IN URBAN AREAS TO FIT ROADWAY CONDITIONS.

NOTES:

1. SEE SPECIAL PROVISIONS FOR CLOSURE HOUR RESTRICTIONS.
2. ALL SIGNS ARE BLACK ON ORANGE UNLESS OTHERWISE DESIGNATED.
3. MINIMUM SHOULDER TAPER RATE = L/3
4. SEE DETOUR PLANS ON SHEETS DU1 AND DU4.
5. SEE TC12 FOR NB I-5 OFF-RAMP CLOSURE REQUIREMENTS.
6. SEE TC16 AND TC17 FOR PROTECTIVE VEHICLE AND SIGNAGE REQUIREMENTS.

LEGEND

- TEMPORARY SIGN LOCATION
- TRAFFIC SAFETY DRUM WITH TYPE C WARNING LIGHTS
- SEQUENTIAL ARROW SIGN
- TRANSPORTABLE ATTENUATOR
- PCMS — PORTABLE CHANGEABLE MESSAGE SIGN
- WORK ZONE
- TYPE 3 BARRICADE

CHANNELIZATION DEVICE SPACING (feet)		
MPH	TAPER	TANGENT
50/70	40	40
35/45	30	30
25/30	20	20

116TH STREET NE LEFT LANE CLOSURES

NOT TO SCALE

FILE NAME	U:\PSO\Projects\Clients\1598-TulalipTribes\554-1598-095 116th-Ph4-PSE\99Svcs\CADD\DGN\PS&ESheets\BL1598033_PS_TC2.dgn
TIME	12:04:58 PM
DATE	8/25/2017
PLOTTED BY	purgabut
DESIGNED BY	M. TSUN
ENTERED BY	B. PURGANAN
CHECKED BY	D. PROCTOR
APPROVED BY	H. LONGFELLOW

REVISION | DATE | BY

REGION NO. 10 | STATE WASH | FED.AID PROJ.NO.

JOB NUMBER

CONTRACT NO. | LOCATION NO.

P.E. STAMP BOX — DATE

HOWARD DAVID LONGFELLOW — STATE OF WASHINGTON — REGISTERED PROFESSIONAL ENGINEER — P.E. STAMP BOX — DATE

TULALIP TRIBES — Parametrix

I-5 / 116TH STREET NE
INTERCHANGE IMPROVEMENTS
PHASE 4 RAMPS

TRAFFIC CONTROL PLAN

Plot 2

PLAN REF NO TC26

SHEET 229 OF 238 SHEETS

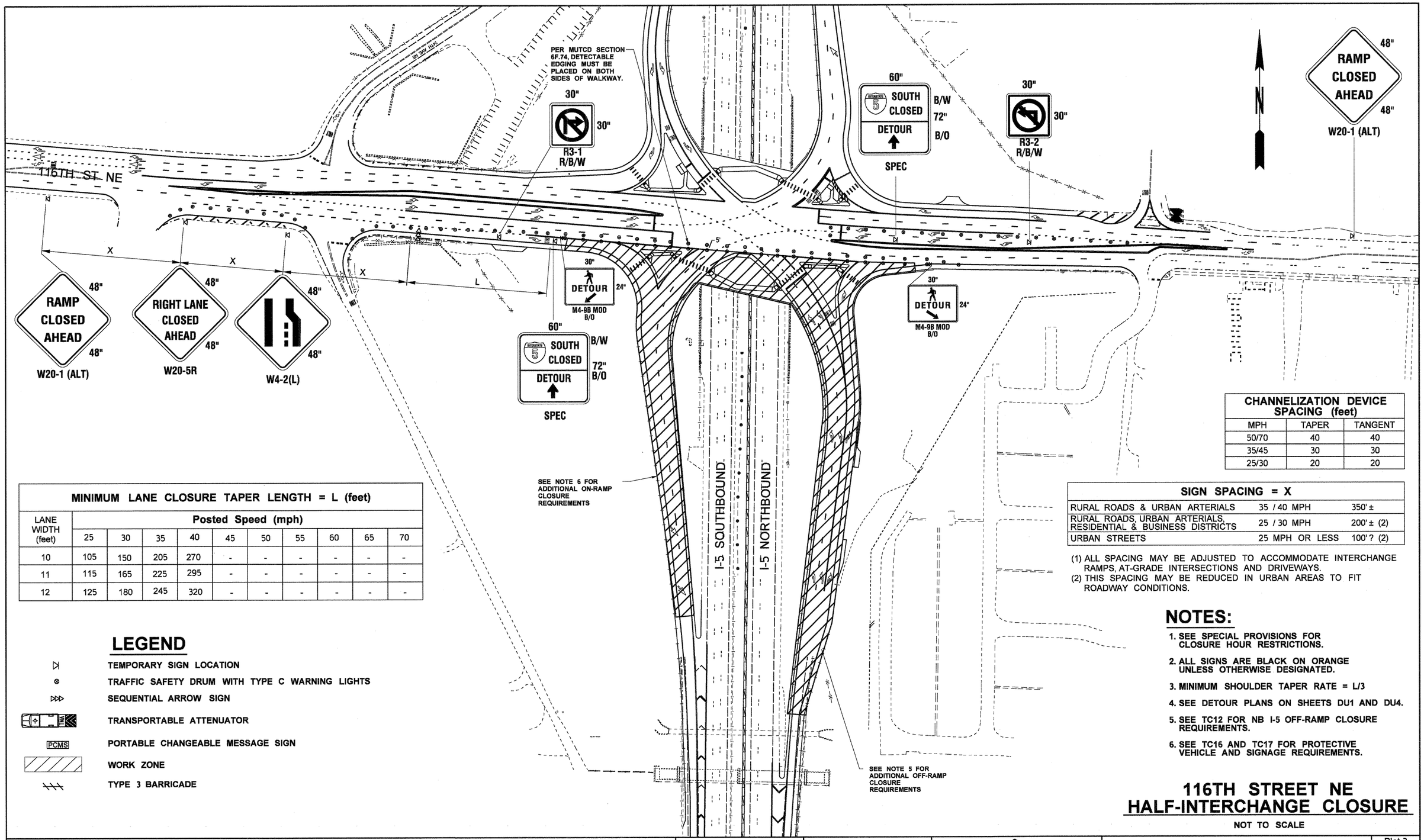

CHANNELIZATION DEVICE SPACING (feet)		
MPH	TAPER	TANGENT
50/70	40	40
35/45	30	30
25/30	20	20

SIGN SPACING = X		
RURAL ROADS & URBAN ARTERIALS	35 / 40 MPH	350' ±
RURAL ROADS, URBAN ARTERIALS, RESIDENTIAL & BUSINESS DISTRICTS	25 / 30 MPH	200' ± (2)
URBAN STREETS	25 MPH OR LESS	100' ? (2)

(1) ALL SPACING MAY BE ADJUSTED TO ACCOMMODATE INTERCHANGE RAMPS, AT-GRADE INTERSECTIONS AND DRIVEWAYS.
(2) THIS SPACING MAY BE REDUCED IN URBAN AREAS TO FIT ROADWAY CONDITIONS.

MINIMUM LANE CLOSURE TAPER LENGTH = L (feet)										
LANE WIDTH (feet)	Posted Speed (mph)									
	25	30	35	40	45	50	55	60	65	70
10	105	150	205	270	-	-	-	-	-	-
11	115	165	225	295	-	-	-	-	-	-
12	125	180	245	320	-	-	-	-	-	-

LEGEND

- TEMPORARY SIGN LOCATION
- TRAFFIC SAFETY DRUM WITH TYPE C WARNING LIGHTS
- SEQUENTIAL ARROW SIGN
- TRANSPORTABLE ATTENUATOR
- PCMS — PORTABLE CHANGEABLE MESSAGE SIGN
- WORK ZONE
- TYPE 3 BARRICADE

NOTES:

1. SEE SPECIAL PROVISIONS FOR CLOSURE HOUR RESTRICTIONS.
2. ALL SIGNS ARE BLACK ON ORANGE UNLESS OTHERWISE DESIGNATED.
3. MINIMUM SHOULDER TAPER RATE = L/3
4. SEE DETOUR PLANS ON SHEETS DU1 AND DU4.
5. SEE TC12 FOR NB I-5 OFF-RAMP CLOSURE REQUIREMENTS.
6. SEE TC16 AND TC17 FOR PROTECTIVE VEHICLE AND SIGNAGE REQUIREMENTS.

116TH STREET NE HALF-INTERCHANGE CLOSURE

NOT TO SCALE

FILE NAME	U:\PSO\Projects\Clients\1598-TulalipTribes\554-1598-095 116th-Ph4-PSE\99Svcs\CADD\DGN\PS&ESheets\BL1598033_PS_TC2.dgn
TIME	12:05:10 PM
DATE	8/25/2017
PLOTTED BY	purgabut
DESIGNED BY	M. TSUN
ENTERED BY	B. PURGANAN
CHECKED BY	D. PROCTOR
APPROVED BY	H. LONGFELLOW

REVISION	DATE	BY

REGION NO.	STATE	FED.AID PROJ.NO.
10	WASH	
JOB NUMBER		
CONTRACT NO.		LOCATION NO.

P.E. STAMP BOX — DATE

HEATH DAVID LONGFELLOW — STATE OF WASHINGTON — 37175 — REGISTERED PROFESSIONAL ENGINEER

P.E. STAMP BOX — DATE

TULALIP TRIBES — Parametrix ©

I-5 / 116TH STREET NE
INTERCHANGE IMPROVEMENTS
PHASE 4 RAMPS

TRAFFIC CONTROL PLAN

Plot 3

PLAN REF NO TC27

SHEET 230 OF 238 SHEETS

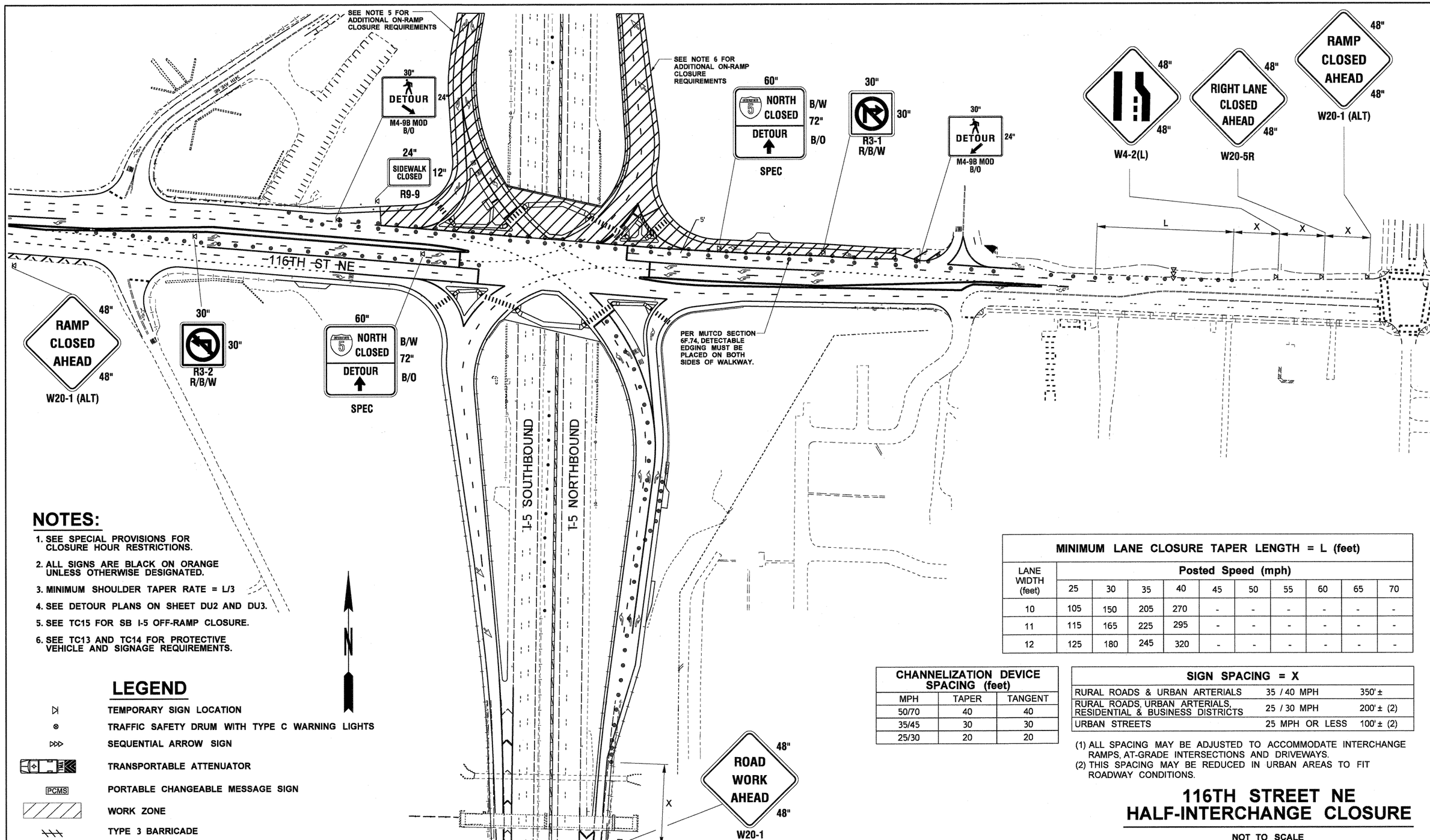

NOTES:

1. SEE SPECIAL PROVISIONS FOR CLOSURE HOUR RESTRICTIONS.
2. ALL SIGNS ARE BLACK ON ORANGE UNLESS OTHERWISE DESIGNATED.
3. MINIMUM SHOULDER TAPER RATE = L/3
4. SEE DETOUR PLANS ON SHEET DU2 AND DU3.
5. SEE TC15 FOR SB I-5 OFF-RAMP CLOSURE.
6. SEE TC13 AND TC14 FOR PROTECTIVE VEHICLE AND SIGNAGE REQUIREMENTS.

LEGEND

- TEMPORARY SIGN LOCATION
- TRAFFIC SAFETY DRUM WITH TYPE C WARNING LIGHTS
- SEQUENTIAL ARROW SIGN
- TRANSPORTABLE ATTENUATOR
- PCMS — PORTABLE CHANGEABLE MESSAGE SIGN
- WORK ZONE
- TYPE 3 BARRICADE

MINIMUM LANE CLOSURE TAPER LENGTH = L (feet)

LANE WIDTH (feet)	Posted Speed (mph)									
	25	30	35	40	45	50	55	60	65	70
10	105	150	205	270	-	-	-	-	-	-
11	115	165	225	295	-	-	-	-	-	-
12	125	180	245	320	-	-	-	-	-	-

CHANNELIZATION DEVICE SPACING (feet)

MPH	TAPER	TANGENT
50/70	40	40
35/45	30	30
25/30	20	20

SIGN SPACING = X

RURAL ROADS & URBAN ARTERIALS	35 / 40 MPH	350' ±
RURAL ROADS, URBAN ARTERIALS, RESIDENTIAL & BUSINESS DISTRICTS	25 / 30 MPH	200' ± (2)
URBAN STREETS	25 MPH OR LESS	100' ± (2)

(1) ALL SPACING MAY BE ADJUSTED TO ACCOMMODATE INTERCHANGE RAMPS, AT-GRADE INTERSECTIONS AND DRIVEWAYS.
(2) THIS SPACING MAY BE REDUCED IN URBAN AREAS TO FIT ROADWAY CONDITIONS.

116TH STREET NE HALF-INTERCHANGE CLOSURE

NOT TO SCALE

FILE NAME	U:\PSO\Projects\Clients\1598-TulalipTribes\554-1598-095 116th-Ph4-PSE\99Svcs\CADD\DGN\PS&ESheets\BL1598033_PS_TC2.dgn
TIME	12:05:26 PM
DATE	8/25/2017
PLOTTED BY	purgabut
DESIGNED BY	M. TSUN
ENTERED BY	B. PURGANAN
CHECKED BY	D. PROCTOR
APPROVED BY	H. LONGFELLOW

REVISION | DATE | BY

REGION NO. 10 | STATE WASH | FED.AID PROJ.NO.

JOB NUMBER

CONTRACT NO. | LOCATION NO.

P.E. STAMP BOX — DATE

STEPHEN DAVID LONGFELLOW — STATE OF WASHINGTON — 37902 — REGISTERED PROFESSIONAL ENGINEER — DATE — P.E. STAMP BOX

TULALIP TRIBES — Parametrix

I-5 / 116TH STREET NE INTERCHANGE IMPROVEMENTS PHASE 4 RAMPS

TRAFFIC CONTROL PLAN

Plot 4

PLAN REF NO TC28

SHEET 231 OF 238 SHEETS

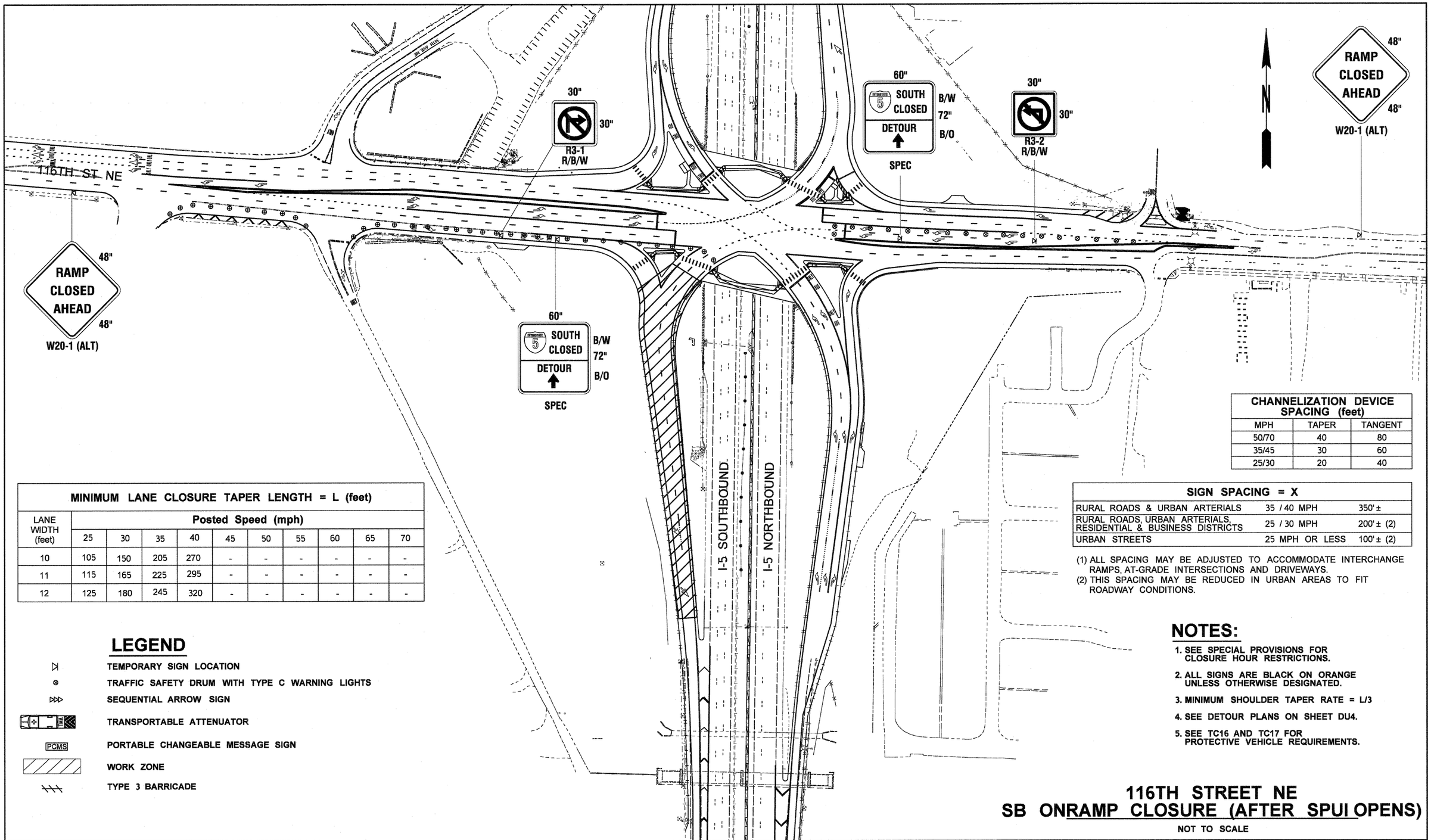

CHANNELIZATION DEVICE SPACING (feet)		
MPH	TAPER	TANGENT
50/70	40	80
35/45	30	60
25/30	20	40

SIGN SPACING = X		
RURAL ROADS & URBAN ARTERIALS	35 / 40 MPH	350' ±
RURAL ROADS, URBAN ARTERIALS, RESIDENTIAL & BUSINESS DISTRICTS	25 / 30 MPH	200' ± (2)
URBAN STREETS	25 MPH OR LESS	100' ± (2)

(1) ALL SPACING MAY BE ADJUSTED TO ACCOMMODATE INTERCHANGE RAMPS, AT-GRADE INTERSECTIONS AND DRIVEWAYS.
(2) THIS SPACING MAY BE REDUCED IN URBAN AREAS TO FIT ROADWAY CONDITIONS.

MINIMUM LANE CLOSURE TAPER LENGTH = L (feet)										
LANE WIDTH (feet)	Posted Speed (mph)									
	25	30	35	40	45	50	55	60	65	70
10	105	150	205	270	-	-	-	-	-	-
11	115	165	225	295	-	-	-	-	-	-
12	125	180	245	320	-	-	-	-	-	-

LEGEND

- TEMPORARY SIGN LOCATION
- TRAFFIC SAFETY DRUM WITH TYPE C WARNING LIGHTS
- SEQUENTIAL ARROW SIGN
- TRANSPORTABLE ATTENUATOR
- PCMS — PORTABLE CHANGEABLE MESSAGE SIGN
- WORK ZONE
- TYPE 3 BARRICADE

NOTES:

1. SEE SPECIAL PROVISIONS FOR CLOSURE HOUR RESTRICTIONS.
2. ALL SIGNS ARE BLACK ON ORANGE UNLESS OTHERWISE DESIGNATED.
3. MINIMUM SHOULDER TAPER RATE = L/3
4. SEE DETOUR PLANS ON SHEET DU4.
5. SEE TC16 AND TC17 FOR PROTECTIVE VEHICLE REQUIREMENTS.

116TH STREET NE
SB ONRAMP CLOSURE (AFTER SPUI OPENS)

NOT TO SCALE

FILE NAME	U:\PSO\Projects\Clients\1598-TulalipTribes\554-1598-095 116th-Ph4-PSE\99Svcs\CADD\DGN\PS&ESheets\BL1598033_PS_TC2.dgn
TIME	12:05:38 PM
DATE	8/25/2017
PLOTTED BY	purgabut
DESIGNED BY	M. TSUN
ENTERED BY	B. PURGANAN
CHECKED BY	D. PROCTOR
APPROVED BY	H. LONGFELLOW

REVISION | DATE | BY

REGION NO. 10 | STATE WASH | FED.AID PROJ.NO.

JOB NUMBER

CONTRACT NO. | LOCATION NO.

P.E. STAMP BOX — DATE

P.E. STAMP BOX — DATE

Parametrix

I-5 / 116TH STREET NE
INTERCHANGE IMPROVEMENTS
PHASE 4 RAMPS

TRAFFIC CONTROL PLAN

Plot 3

PLAN REF NO TC29

SHEET 232 OF 238 SHEETS

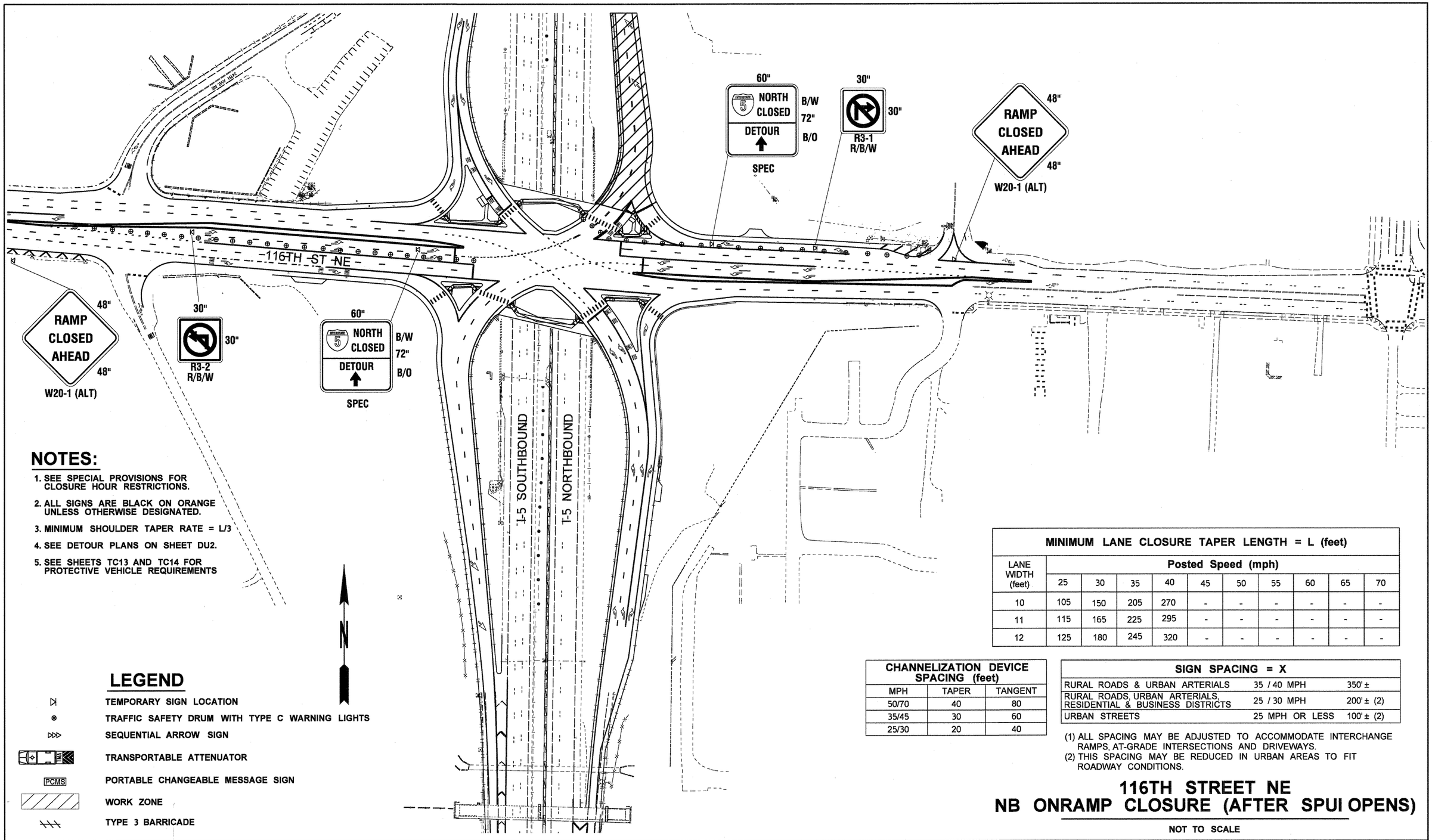

NOTES:

1. SEE SPECIAL PROVISIONS FOR CLOSURE HOUR RESTRICTIONS.
2. ALL SIGNS ARE BLACK ON ORANGE UNLESS OTHERWISE DESIGNATED.
3. MINIMUM SHOULDER TAPER RATE = L/3
4. SEE DETOUR PLANS ON SHEET DU2.
5. SEE SHEETS TC13 AND TC14 FOR PROTECTIVE VEHICLE REQUIREMENTS

LEGEND

- TEMPORARY SIGN LOCATION
- TRAFFIC SAFETY DRUM WITH TYPE C WARNING LIGHTS
- SEQUENTIAL ARROW SIGN
- TRANSPORTABLE ATTENUATOR
- PCMS — PORTABLE CHANGEABLE MESSAGE SIGN
- WORK ZONE
- TYPE 3 BARRICADE

MINIMUM LANE CLOSURE TAPER LENGTH = L (feet)

LANE WIDTH (feet)	Posted Speed (mph)									
	25	30	35	40	45	50	55	60	65	70
10	105	150	205	270	-	-	-	-	-	-
11	115	165	225	295	-	-	-	-	-	-
12	125	180	245	320	-	-	-	-	-	-

CHANNELIZATION DEVICE SPACING (feet)

MPH	TAPER	TANGENT
50/70	40	80
35/45	30	60
25/30	20	40

SIGN SPACING = X

RURAL ROADS & URBAN ARTERIALS	35 / 40 MPH	350' ±
RURAL ROADS, URBAN ARTERIALS, RESIDENTIAL & BUSINESS DISTRICTS	25 / 30 MPH	200' ± (2)
URBAN STREETS	25 MPH OR LESS	100' ± (2)

(1) ALL SPACING MAY BE ADJUSTED TO ACCOMMODATE INTERCHANGE RAMPS, AT-GRADE INTERSECTIONS AND DRIVEWAYS.
(2) THIS SPACING MAY BE REDUCED IN URBAN AREAS TO FIT ROADWAY CONDITIONS.

116TH STREET NE
NB ONRAMP CLOSURE (AFTER SPUI OPENS)

NOT TO SCALE

FILE NAME	U:\PSO\Projects\Clients\1598-TulalipTribes\554-1598-095 116th-Ph4-PSE\99Svcs\CADD\DGN\PS&ESheets\BL1598033_PS_TC2.dgn
TIME	12:05:53 PM
DATE	8/25/2017
PLOTTED BY	purgabut
DESIGNED BY	M. TSUN
ENTERED BY	B. PURGANAN
CHECKED BY	D. PROCTOR
APPROVED BY	H. LONGFELLOW

REVISION | DATE | BY

REGION NO. 10 | STATE WASH | FED.AID PROJ.NO.

JOB NUMBER

CONTRACT NO. | LOCATION NO.

P.E. STAMP BOX — DATE

HARRY DAVID LONGFELLOW — STATE OF WASHINGTON — REGISTERED PROFESSIONAL ENGINEER

P.E. STAMP BOX — DATE

TULALIP TRIBES — Parametrix

I-5 / 116TH STREET NE
INTERCHANGE IMPROVEMENTS
PHASE 4 RAMPS

TRAFFIC CONTROL PLAN

Plot 4

PLAN REF NO TC30

SHEET 233 OF 238 SHEETS

LEGEND

- TEMPORARY SIGN LOCATION
- TRAFFIC SAFETY DRUM WITH TYPE C WARNING LIGHTS
- SEQUENTIAL ARROW SIGN
- TRANSPORTABLE ATTENUATOR
- PCMS — PORTABLE CHANGEABLE MESSAGE SIGN
- WORK ZONE
- TYPE 3 BARRICADE

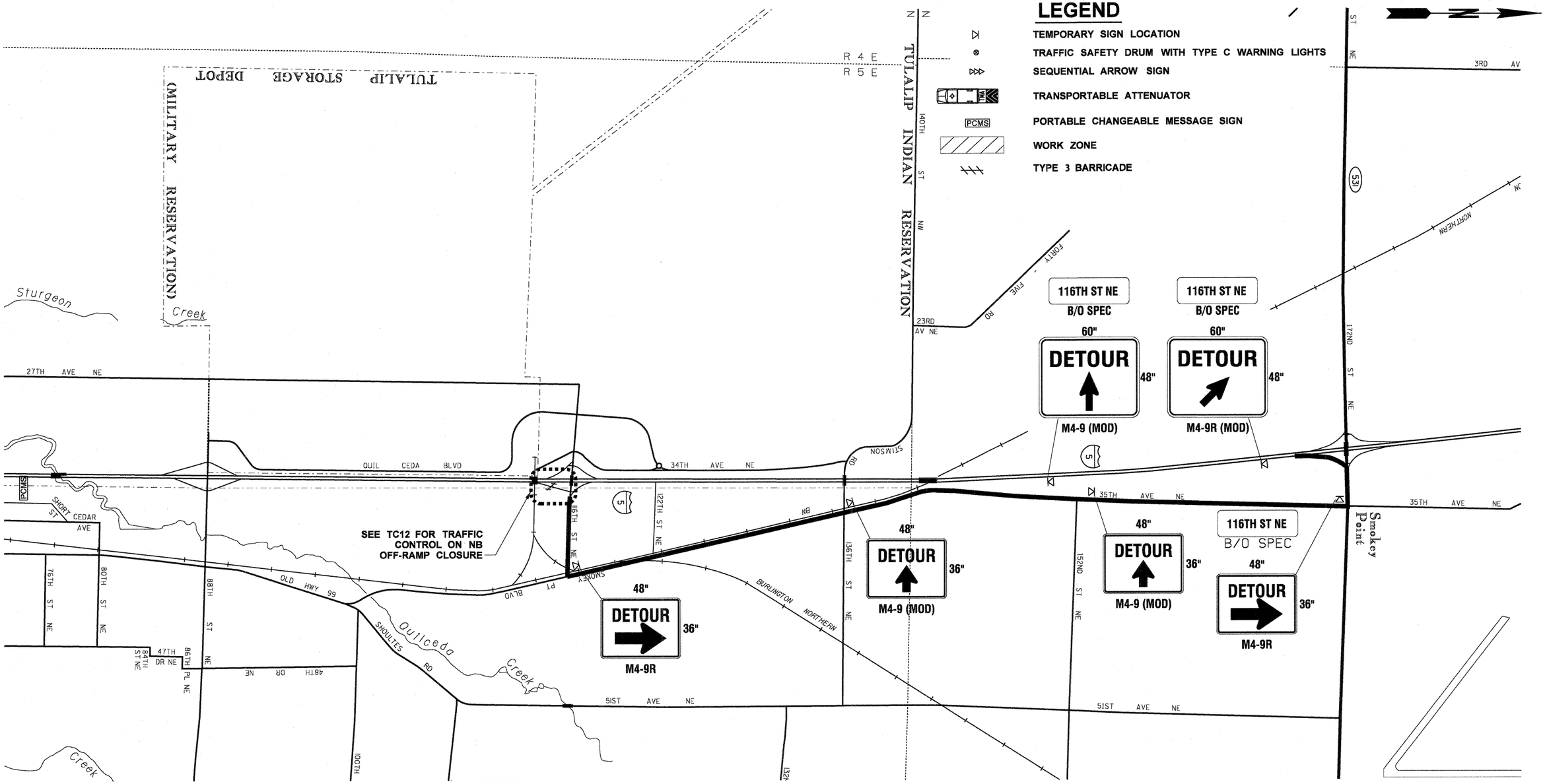

NOTES:

1. SEE SPECIAL PROVISIONS FOR CLOSURE HOUR RESTRICTIONS.
2. ALL SIGNS ARE BLACK ON ORANGE UNLESS OTHERWISE DESIGNATED.

PCMS	
PHASE 1	PHASE 2
116TH ST EXIT CLOSED	USE 88TH OR 172ND ST EXITS
2.0 SEC	2.0 SEC

NB I-5 OFF-RAMP CLOSURE DETOUR PLAN

NOT TO SCALE

FILE NAME	U:\PSO\Projects\Clients\1598-TulalipTribes\554-1598-095 116th-Ph4-PSE\99Svcs\CADD\DGN\PS&ESheets\BL1598033_PS_DU.dgn
TIME	12:08:02 PM
DATE	8/25/2017
PLOTTED BY	purgabut
DESIGNED BY	M. TSUN
ENTERED BY	B. PURGANAN
CHECKED BY	S. OLLING
APPROVED BY	H. LONGFELLOW

REVISION | DATE | BY

REGION NO.	STATE	FED.AID PROJ.NO.
10	WASH	
JOB NUMBER		
CONTRACT NO.		LOCATION NO.

P.E. STAMP BOX — DATE

HARRY DAVID LONGFELLOW — STATE OF WASHINGTON — 39302 — REGISTERED PROFESSIONAL ENGINEER — DATE — P.E. STAMP BOX

TULALIP TRIBES — Parametrix

I-5 / 116TH STREET NE INTERCHANGE IMPROVEMENTS PHASE 4 RAMPS

DETOUR PLAN

Plot 1

PLAN REF NO DU1

SHEET 234 OF 238 SHEETS

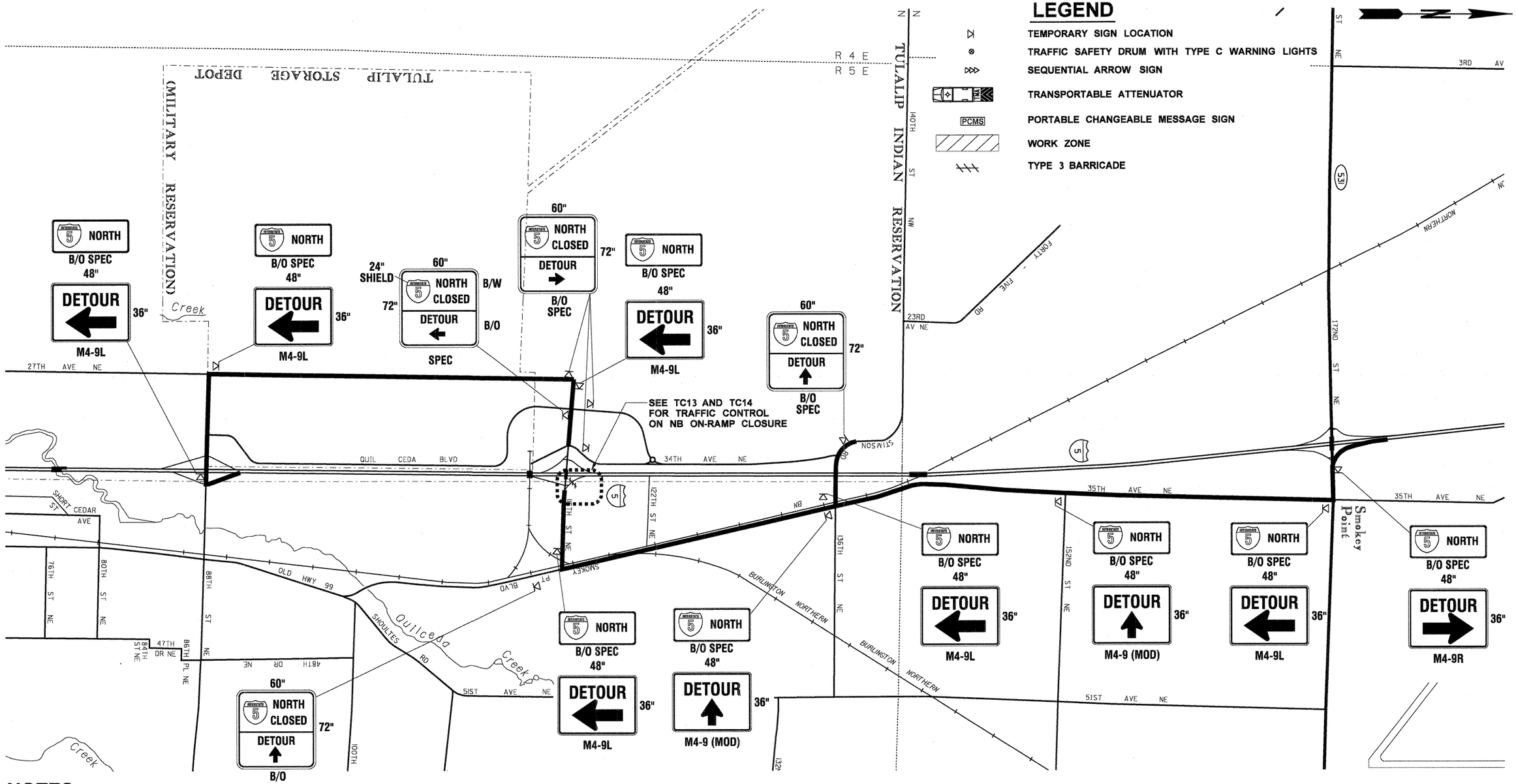

NOTES:

1. SEE SPECIAL PROVISIONS FOR CLOSURE HOUR RESTRICTIONS.
2. ALL SIGNS ARE BLACK ON ORANGE UNLESS OTHERWISE DESIGNATED.

NB I-5 ON-RAMP CLOSURE DETOUR PLAN

NOT TO SCALE

FILE NAME	U:\PSO\Projects\Clients\1598-TulalipTribes\554-1598-095 116th-Ph4-PSE\99Svcs\CADD\DGN\PS&ESheets\BL1598033_PS_DU.dgn						
TIME	12:08:11 PM				REGION NO. 10	STATE WASH	FED.AID PROJ.NO.
DATE	8/25/2017				JOB NUMBER		
PLOTTED BY	purgabut						
DESIGNED BY	M. TSUN				CONTRACT NO.		LOCATION NO.
ENTERED BY	B. PURGANAN						
CHECKED BY	S. OLLING						
APPROVED BY	H. LONGFELLOW						
		REVISION	DATE	BY			

P.E. STAMP BOX — DATE

DAVID LONGFELLOW, STATE OF WASHINGTON, 47902, REGISTERED PROFESSIONAL ENGINEER — P.E. STAMP BOX — DATE

TULALIP TRIBES — Parametrix

I-5 / 116TH STREET NE INTERCHANGE IMPROVEMENTS PHASE 4 RAMPS

DETOUR PLAN

Plot 2

PLAN REF NO DU2

SHEET 235 OF 238 SHEETS

LEGEND

- TEMPORARY SIGN LOCATION
- TRAFFIC SAFETY DRUM WITH TYPE C WARNING LIGHTS
- SEQUENTIAL ARROW SIGN
- TRANSPORTABLE ATTENUATOR
- PCMS — PORTABLE CHANGEABLE MESSAGE SIGN
- WORK ZONE
- TYPE 3 BARRICADE

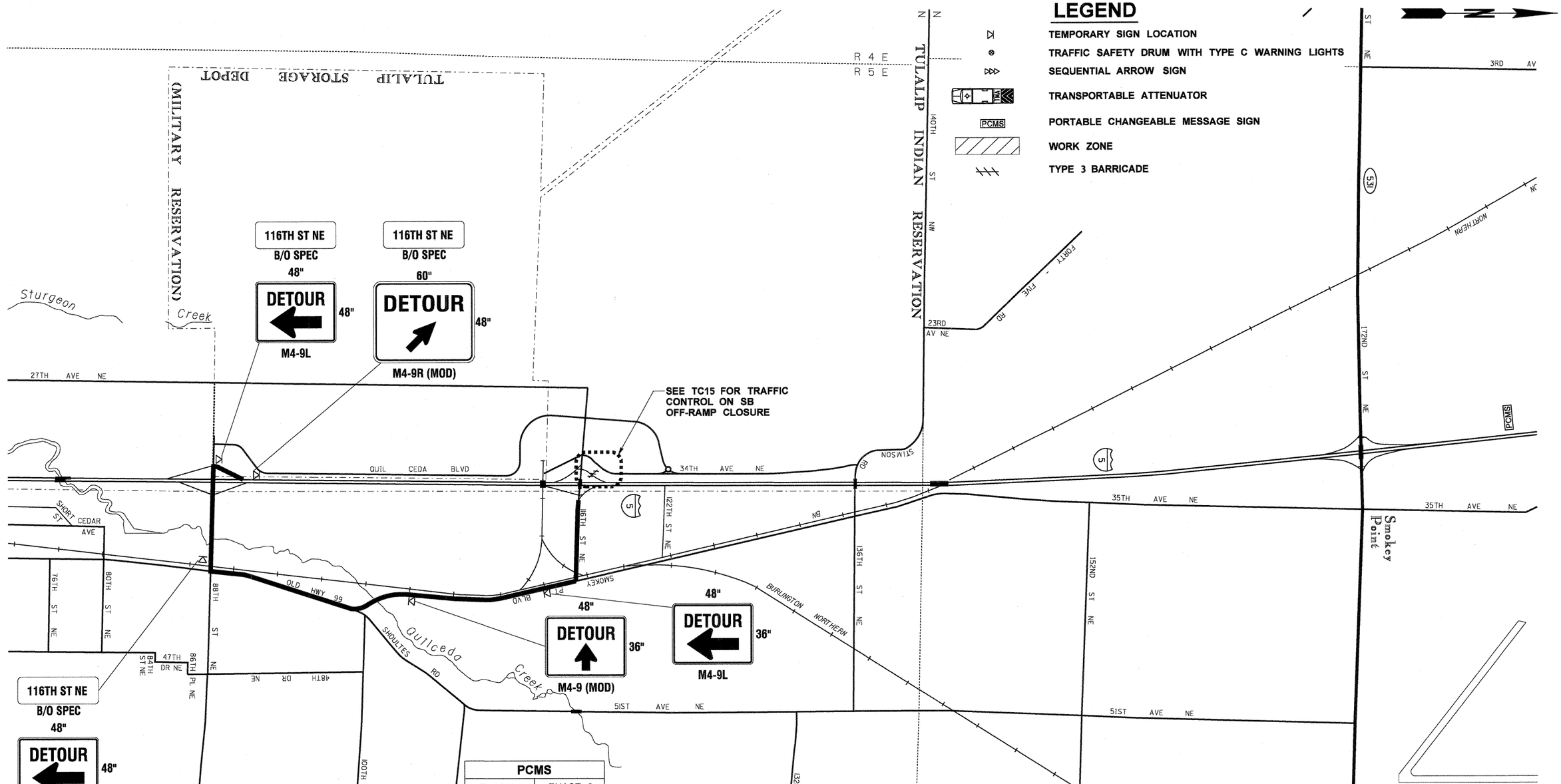

PCMS	
PHASE 1	PHASE 2
116TH ST EXIT CLOSED	USE 88TH OR 172ND ST EXITS
2.0 SEC	2.0 SEC

NOTES:

1. SEE SPECIAL PROVISIONS FOR CLOSURE HOUR RESTRICTIONS.
2. ALL SIGNS ARE BLACK ON ORANGE UNLESS OTHERWISE DESIGNATED.

SB I-5 OFF-RAMP CLOSURE DETOUR PLAN

NOT TO SCALE

FILE NAME	U:\PSO\Projects\Clients\1598-TulalipTribes\554-1598-095 116th-Ph4-PSE\99Svcs\CADD\DGN\PS&ESheets\BL1598033_PS_DU.dgn
TIME	12:08:20 PM
DATE	8/25/2017
PLOTTED BY	purgabut
DESIGNED BY	M. TSUN
ENTERED BY	B. PURGANAN
CHECKED BY	S. OLLING
APPROVED BY	H. LONGFELLOW

REVISION	DATE	BY

REGION NO.	STATE	FED.AID PROJ.NO.
10	WASH	
JOB NUMBER		
CONTRACT NO.		LOCATION NO.

P.E. STAMP BOX — DATE

STATE OF WASHINGTON — DAVID LONGFELLOW — 37902 — REGISTERED PROFESSIONAL ENGINEER

P.E. STAMP BOX — DATE

TULALIP TRIBES — Parametrix

I-5 / 116TH STREET NE INTERCHANGE IMPROVEMENTS PHASE 4 RAMPS

DETOUR PLAN

Plot 3

PLAN REF NO DU3

SHEET 236 OF 238 SHEETS

LEGEND

- TEMPORARY SIGN LOCATION
- TRAFFIC SAFETY DRUM WITH TYPE C WARNING LIGHTS
- SEQUENTIAL ARROW SIGN
- TRANSPORTABLE ATTENUATOR
- PCMS — PORTABLE CHANGEABLE MESSAGE SIGN
- WORK ZONE
- TYPE 3 BARRICADE

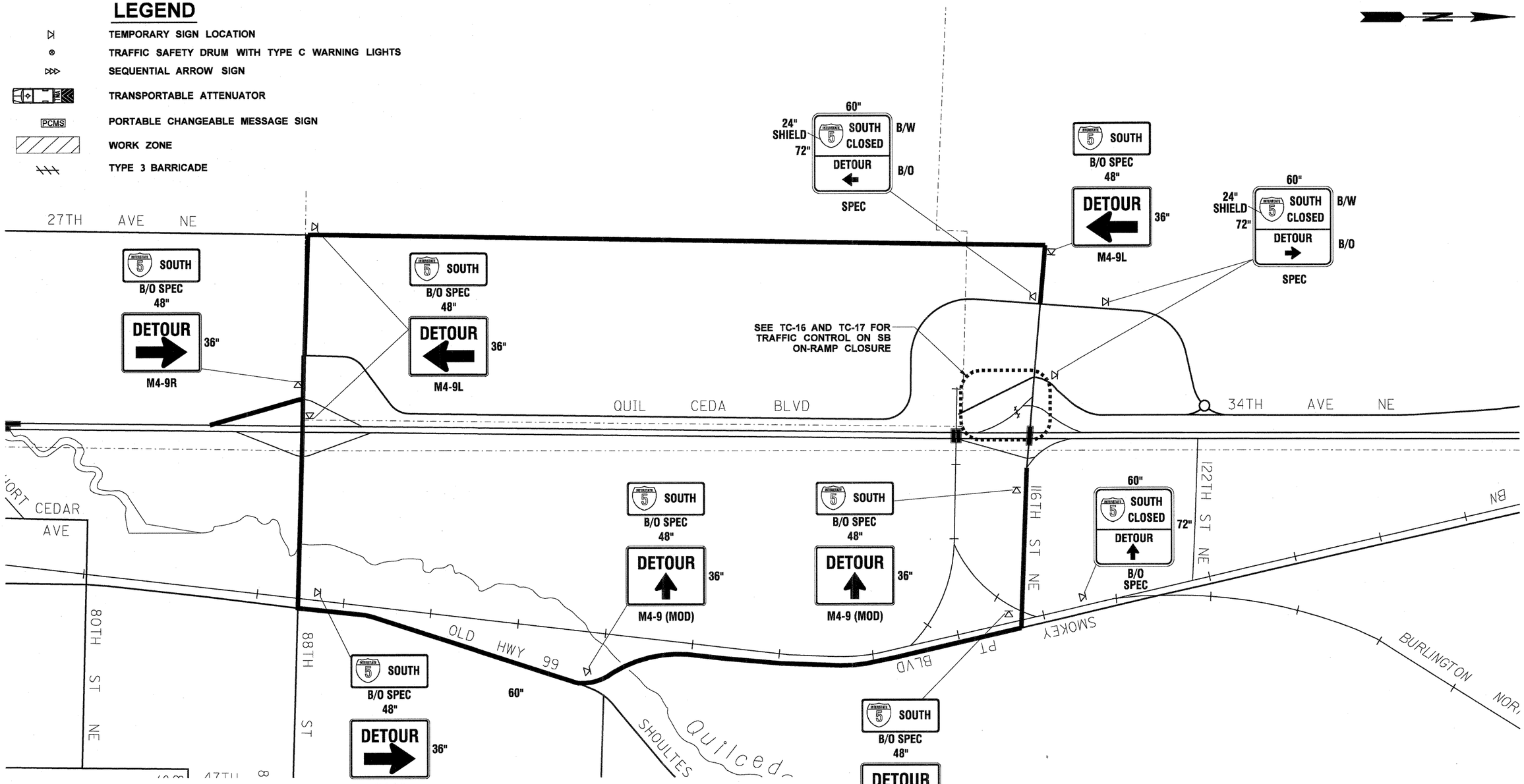

NOTES:

1. SEE SPECIAL PROVISIONS FOR CLOSURE HOUR RESTRICTIONS.
2. ALL SIGNS ARE BLACK ON ORANGE UNLESS OTHERWISE DESIGNATED.

SB I-5 ON-RAMP CLOSURE DETOUR PLAN

NOT TO SCALE

FILE NAME	U:\PSO\Projects\Clients\1598-TulalipTribes\554-1598-095 116th-Ph4-PSE\99Svcs\CADD\DGN\PS&ESheets\BL1598033_PS_DU.dgn
TIME	12:08:29 PM
DATE	8/25/2017
PLOTTED BY	purgabut
DESIGNED BY	M. TSUN
ENTERED BY	B. PURGANAN
CHECKED BY	S. OLLING
APPROVED BY	H. LONGFELLOW

REVISION	DATE	BY

REGION NO.	STATE	FED.AID PROJ.NO.
10	WASH	
JOB NUMBER		
CONTRACT NO.		LOCATION NO.

P.E. STAMP BOX — DATE

P.E. STAMP BOX — DATE

TULALIP TRIBES — Parametrix

I-5 / 116TH STREET NE INTERCHANGE IMPROVEMENTS PHASE 4 RAMPS

DETOUR PLAN

Plot 4

PLAN REF NO DU4

SHEET 237 OF 238 SHEETS

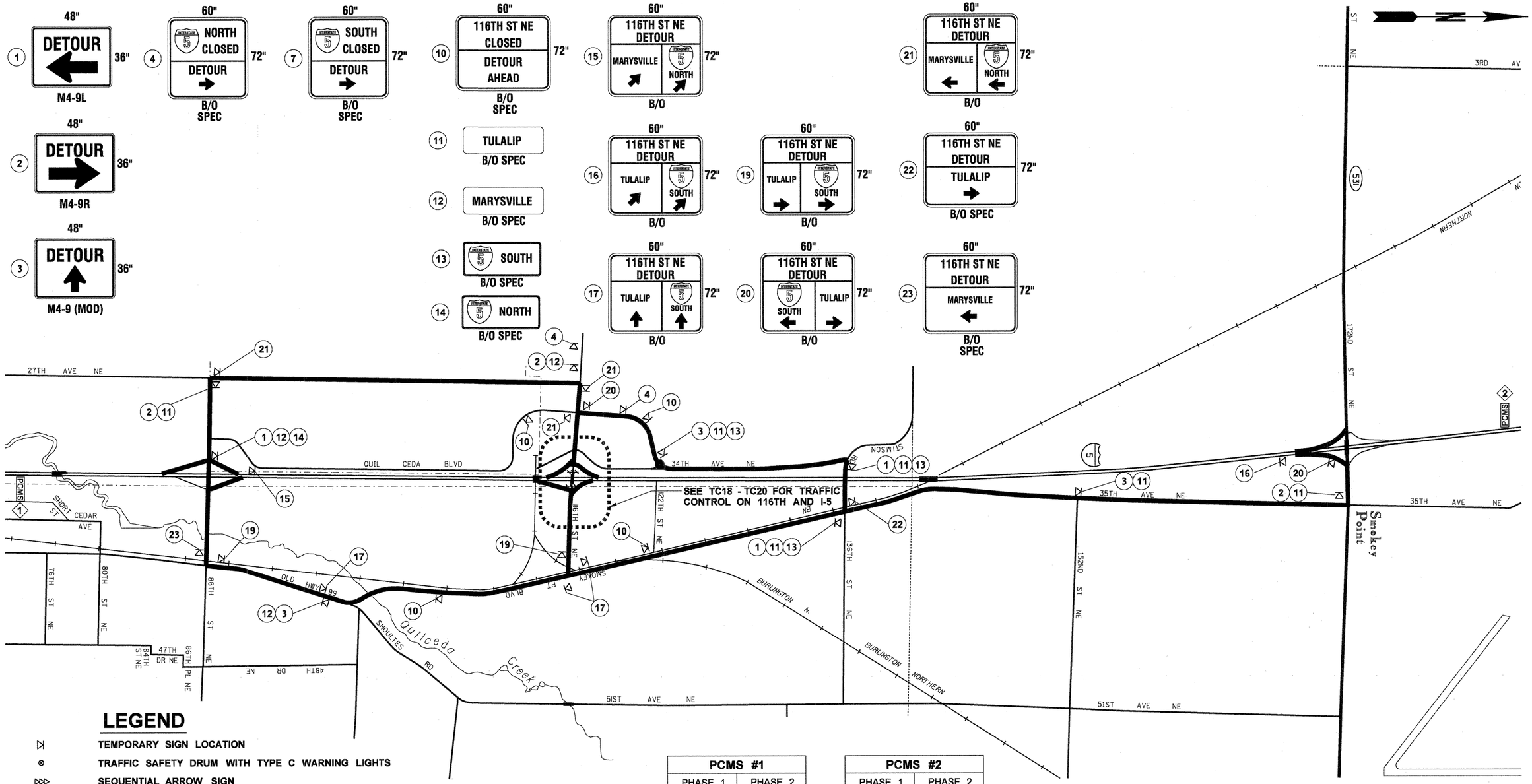

LEGEND

- TEMPORARY SIGN LOCATION
- TRAFFIC SAFETY DRUM WITH TYPE C WARNING LIGHTS
- SEQUENTIAL ARROW SIGN
- TRANSPORTABLE ATTENUATOR
- PCMS — PORTABLE CHANGEABLE MESSAGE SIGN
- WORK ZONE
- TYPE 3 BARRICADE

NOTES:

1. SEE SPECIAL PROVISIONS FOR CLOSURE HOUR RESTRICTIONS.
2. ALL SIGNS ARE BLACK ON ORANGE UNLESS OTHERWISE DESIGNATED.

PCMS #1	
PHASE 1	PHASE 2
116TH NE W-BND CLOSED	USE EXIT 206 OR NEXT EX
2.0 SEC	2.0 SEC

FIELD LOCATE 1 MILE (+-) IN ADVANCE OF DETOUR EXIT

PCMS #2	
PHASE 1	PHASE 2
116TH NE E-BND CLOSED	USE EXIT 206 OR NEXT EX
2.0 SEC	2.0 SEC

FIELD LOCATE 1 MILE (+-) IN ADVANCE OF DETOUR EXIT

116TH ST NE CLOSURE DETOUR PLAN

NOT TO SCALE

FILE NAME	U:\PSO\Projects\Clients\1598-TulalipTribes\554-1598-095 116th-Ph4-PSE\99Svcs\CADD\DGN\PS&ESheets\BL1598033_PS_DU.dgn
TIME	12:08:37 PM
DATE	8/25/2017
PLOTTED BY	purgabut
DESIGNED BY	M. TSUN
ENTERED BY	B. PURGANAN
CHECKED BY	S. OLLING
APPROVED BY	H. LONGFELLOW
REGIONAL ADM.	

REVISION | DATE | BY

REGION NO. 10 | STATE WASH | FED.AID PROJ.NO.

JOB NUMBER

CONTRACT NO. | LOCATION NO.

P.E. STAMP BOX — DATE

HARRY DAVID LONGFELLOW — STATE OF WASHINGTON — REGISTERED PROFESSIONAL ENGINEER — 8/25/17

P.E. STAMP BOX — DATE

TULALIP TRIBES — Parametrix

I-5 / 116TH STREET NE INTERCHANGE IMPROVEMENTS PHASE 4 RAMPS

DETOUR PLAN

Plot 5

PLAN REF NO DU5

SHEET 238 OF 238 SHEETS