THE CONSOLIDATED BOROUGH OF QUIL CEDA VILLAGE

MBR TREATMENT FACILITY UPGRADE

TULALIP, WASHINGTON

QCV PROJECT NO. QVC17-004
PMX PROJECT NO. 216-1598-102

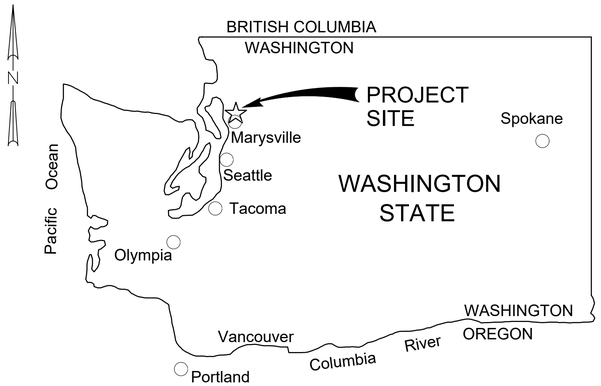

VICINITY MAP

NOT TO SCALE

TULALIP TRIBES ©

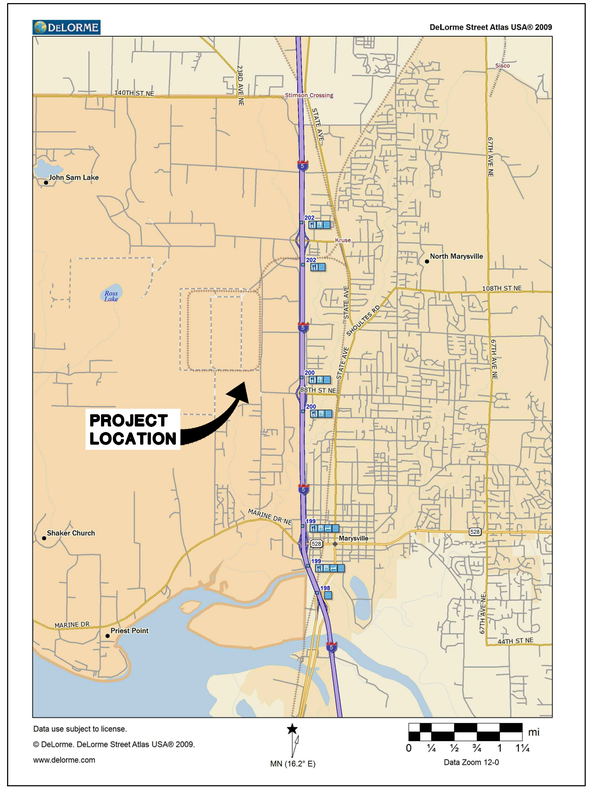

LOCATION MAP

NOT TO SCALE

Allan Maas Digitally signed by Allan Maas
Date: 2018.08.22 14:57:55 -07'00'

CONFORMED SET

	REVISIONS	DATE	BY
1	CONFORMED SET	8/22/18	AM

DESIGNED A. MAAS
DRAWN D. PETERSON
CHECKED L. ROSCOE
APPROVED B. BUNKER

ONE INCH AT FULL SCALE. IF NOT, SCALE ACCORDINGLY

FILE NAME PS1598102-G1
JOB No. 216-1598-102
DATE FEBRUARY 2018

ALLAN MAAS — STATE OF WASHINGTON — 27045 — REGISTERED PROFESSIONAL ENGINEER

AUGUST 22, 2018

Parametrix
ENGINEERING . PLANNING . ENVIRONMENTAL SCIENCES
1019 39TH AVENUE SE, SUITE 100 | PUYALLUP, WA 98374
P 253.604.6600
WWW.PARAMETRIX.COM

PROJECT NAME
THE CONSOLIDATED BOROUGH OF QUIL CEDA VILLAGE
MBR TREATMENT FACILITY UPGRADE
TULALIP, WASHINGTON

TITLE, VICINITY MAP AND LOCATION MAP

DRAWING NO. 1 OF 157
G1

PATH: U:\PSO\Projects\Clients\1598--TulalipTribes\216-1598-102 MBR Upgrade\99Svcs\CADD\DWG
PLOTTED BY: peterden DATE: Wednesday, August 22, 2018 8:34:19 AM
LAYOUT: G1

INDEX TO DRAWINGS

DRAWING NO.	SHEET NO.	TITLE
GENERAL		
1	G1	TITLE, VICINITY MAP AND LOCATION MAP
2	G2	SHEET INDEX
3	G3	LEGEND AND ABBREVIATIONS
PROCESS		
4	P1	P&ID PROCESS LEGEND AND ABBREVIATIONS
5	P2	P&ID INSTRUMENTATION LEGEND AND ABBREVIATIONS
6	P101	P&ID GRIT REMOVAL SCREENING AND GRIT CLASSIFIER
7	P102	P&ID POST MEMBRANE, ANOXIC TANKS & PRE-MEMBRANE AERATION TANK
* 8	P201	P&ID PLANT DRAIN PS AND MBR #1 & #3 PROCESS AIR BLOWERS
9	P202	P&ID MBR #2 & #4 PROCESS AIR BLOWERS
10	P203	P&ID MBR #1 & #3 MIXED LIQUOR RECYCLE PUMPS
11	P204	P&ID MBR #2 & #4 MIXED LIQUOR RECYCLE PUMPS
12	P205	P&ID MBR #1
13	P206	P&ID MBR #4
14	P207	P&ID PERMEATE PUMPS
15	P301	P&ID EFFLUENT LEVEL CONTROL
CIVIL		
16	C1	CIVIL SITE PLAN
17	C2	SITE PIPING PLAN
18	C3	CIVIL DETAILS
STRUCTURAL		
19	S1	STRUCTURAL NOTES
20	S10	REC INFLUENT BOX AND STRUCTURAL DETAILS
21	S11	REC INFLUENT BOX SUPPORT STAND AND STRUCTURAL DETAILS
22	S12	PERMEATE PUMP SUPPORT AND STRUCTURAL DETAILS
23	S201	MBR BUILDING FLOOR PLAN
24	S301	EFFLUENT PUMP MONORAIL HOIST
25	S302	EFFLUENT BUILDING SECTIONS
26	S303	EFFLUENT BUILDING DETAILS
MECHANICAL		
27	M1	MECHANICAL DETAILS
28	M2	MECHANICAL DETAILS
29	M101	HEADWORKS ANOXIC FACILITY GENERAL ARRANGEMENT
30	M102	HEADWORKS EL 12.50' - 29.50'
31	M103	HEADWORKS FLOOR EL 0.00'
32	M104	HEADWORKS SECTIONS
33	M105	GALLERY AND PRE-MBR PIPING PLANS
34	M106	GALLERY SECTIONS
35	M111	PLANT DRAIN PUMP STATION
36	M201	MBR BUILDING PLAN
37	M202	MBR BUILDING PLAN EL -5.00' - 11.00'
38	M203	MBR BUILDING PLAN EL 11.00' - 26.00'
39	M204	MBR BUILDING SECTION A
40	M205	MBR BUILDING SECTION B
41	M206	MBR BUILDING SECTION C
42	M207	MBR BUILDING SECTION D
43	M208	MBR BUILDING SECTIONS
44	M209	MBR BUILDING SECTION
45	M210	ISOMETRIC VIEWS
46	M211	ISOMETRIC VIEWS
47	M212	ISOMETRIC VIEWS

INDEX TO DRAWINGS

DRAWING NO.	SHEET NO.	TITLE
ELECTRICAL		
48	E1	ELECTRICAL LEGEND AND ABBREVIATIONS
49	E2	ELECTRICAL SITE PLAN
50	E3	SUBSTATION A ONE-LINE DIAGRAM
51	E4	SUBSTATION A ELEVATION
52	E5	SUBSTATION A PLAN AND SECTIONS
53	E6	PLANT LOAD CALCULATION SUBSTATION A & GENERATOR LOAD SHED
54	E7	CONDUIT AND CABLE SCHEDULE
55	E8	CONDUIT AND CABLE SCHEDULE
56	E9	SUBMERSIBLE PUMPS AND MIXER LOAD ELEMENTARY
57	E10	TYPICAL VFD ELEMENTARY DIAGRAM
58	E11	ELECTRICAL DETAILS
59	E101	HEADWORKS BUILDING MCC 1A & 1B ONE-LINE DIAGRAM
60	E102	HEADWORKS BUILDING MCC 1A & 1B ELEVATIONS AND LOAD CALCULATIONS
61	E103	HEADWORKS BUILDING CABLE TRAY PLAN EL 0.00' - 12.50'
62	E104	HEADWORKS BUILDING CONDUIT PLAN EL 27.00' - 28.50'
63	E201	MBR BUILDING MCC 2A & 2B ONE-LINE DIAGRAM
64	E202	MBR BUILDING MCC 2A & 2B ELEVATIONS
65	E203	MBR BUILDING MCC 2A & 2B LOAD CALCULATIONS & PANEL SCHEDULES
66	E204	MBR BUILDING MCC 3A & 3B ONE-LINE DIAGRAM
67	E205	MBR BUILDING MCC 3A & 3B ELEVATIONS
68	E206	MBR BUILDING MCC 3A & 3B LOAD CALCULATIONS & PANEL SCHEDULES
69	E207	MBR BUILDING POWER AND CONTROL PLAN EL 0.00' - 11.00'
70	E208	MBR BUILDING POWER AND CONTROL PLAN EL 11.00' - 26.00'
71	E209	MBR BUILDING POWER AND CONTROL PLAN EL 26.00'
INSTRUMENTATION		
72	I1	NETWORK BLOCK DIAGRAM
73	I-D101	HEADWORKS CONTROL PANEL DEMOLITION
74	I-D201	MBR CONTROL PANEL DEMOLITION
75	I-D301	EFFLUENT CONTROL PANEL DEMOLITION
* 76	I100	LCP-1000 PLC RACK ASSEMBLY
77	I101	LCP-1000 PLC 1, RACK 1, SLOT 1 AND SLOT 2 DISCRETE INPUTS
78	I102	LCP-1000 PLC 1, RACK 1, SLOT 3 AND SLOT 4 DISCRETE INPUTS
79	I103	LCP-1000 PLC 1, RACK 1, SLOT 5 AND SLOT 6 DISCRETE INPUTS
80	I104	LCP-1000 PLC 1, RACK 1, SLOT 7 AND SLOT 8 DISCRETE INPUTS
81	I105	LCP-1000 PLC 1, RACK 1, SLOT 9 AND SLOT 10 DISCRETE INPUTS
82	I106	LCP-1000 PLC 1, RACK 1, SLOT 11 DISCRETE INPUTS
83	I107	LCP-1000 PLC 1, RACK 2, SLOT 0 AND SLOT 1 DISCRETE INPUTS
84	I108	LCP-1000 PLC 1, RACK 2, SLOT 2 AND SLOT 3 DISCRETE INPUTS
85	I109	LCP-1000 PLC 1, RACK 2, SLOT 4 DISCRETE INPUTS
86	I110	LCP-1000 PLC 1, RACK 2, SLOT 5 AND SLOT 6 DISCRETE OUTPUTS
87	I111	LCP-1000 PLC 1, RACK 2, SLOT 7 AND SLOT 8 DISCRETE OUTPUTS
88	I112	LCP-1000 PLC 1, RACK 2, SLOT 9 AND SLOT 10 DISCRETE OUTPUTS
89	I113	LCP-1000 PLC 1, RACK 2, SLOT 11 AND SLOT 12 DISCRETE OUTPUTS
90	I114	LCP-1000 PLC 1, RACK 2, SLOT 13 DISCRETE OUTPUTS
91	I115	LCP-1000 PLC 1, RACK 2, SLOT 14 ANALOG INPUTS
92	I116	LCP-1000 PLC 1, RACK 2, SLOT 15 ANALOG OUTPUTS
93	I200	LCP-2000 PANEL LAYOUT
* 94	I201	LCP-2000 TERMINAL STRIP ASSEMBLIES AND BILL OF MATERIALS
95	I202	LCP-2000 PANEL WIRING DIAGRAM
96	I203	LCP-2000 PANEL WIRING DIAGRAM
97	I204	LCP-2000 POWER WIRING SCHEMATIC
98	I205	LCP-2000 POWER WIRING SCHEMATIC

INDEX TO DRAWINGS

DRAWING NO.	SHEET NO.	TITLE
99	I206	LCP-2000 POWER WIRING SCHEMATIC
* 100	I207	LCP-2000 PLC RACK ASSEMBLY
101	I208	LCP-2000 PLC 1, RACK 1, SLOT 1 DISCRETE OUTPUTS
102	I209	LCP-2000 PLC 1, RACK 1, SLOT 2 DISCRETE OUTPUTS
103	I210	LCP-2000 PLC 1, RACK 1 SLOT 3 ANALOG INPUTS
104	I211	LCP-2000 PLC 1, RACK 1 SLOT 4 ANALOG OUTPUTS
105	I212	LCP-2000 PLC 1, RACK 1, SLOT 5 DISCRETE INPUTS
106	I213	LCP-2000 PLC 1, RACK 1, SLOT 6 DISCRETE INPUTS
107	I214	LCP-2000 PLC 1, RACK 1, SLOT 7 DISCRETE INPUTS
108	I215	LCP-2000 PLC 1, RACK 2, SLOT 0 DISCRETE OUTPUTS
109	I216	LCP-2000 PLC 1, RACK 2, SLOT 1 DISCRETE OUTPUTS
110	I217	LCP-2000 PLC 1, RACK 2, SLOT 2 ANALOG INPUTS
111	I218	LCP-2000 PLC 1, RACK 2, SLOT 3 ANALOG OUTPUTS
112	I219	LCP-2000 PLC 1, RACK 2, SLOT 4 DISCRETE INPUTS
113	I220	LCP-2000 PLC 1, RACK 2, SLOT 5 DISCRETE INPUTS
114	I221	LCP-2000 PLC 1, RACK 2, SLOT 6 DISCRETE INPUTS
115	I222	LCP-2000 PLC 1, RACK 2, SLOT 7 DISCRETE INPUTS
116	I223	LCP-2000 PLC 1, RACK 3, SLOT 0 DISCRETE OUTPUTS
117	I224	LCP-2000 PLC 1, RACK 3, SLOT 1 DISCRETE OUTPUTS
118	I225	LCP-2000 PLC 1, RACK 3, SLOT 2 ANALOG INPUTS
119	I226	LCP-2000 PLC 1, RACK 3, SLOT 3 ANALOG OUTPUTS
120	I227	LCP-2000 PLC 1, RACK 3, SLOT 4 DISCRETE INPUTS
121	I228	LCP-2000 PLC 1, RACK 3, SLOT 5 DISCRETE INPUTS
122	I229	LCP-2000 PLC 1, RACK 3, SLOT 6 DISCRETE INPUTS
123	I230	LCP-2000 PLC 1, RACK 3, SLOT 7 DISCRETE INPUTS
* 124	I240	LCP-2023 PLC RACK ASSEMBLY
125	I241	LCP-2023 PLC 2, RACK 1, SLOT 1 AND SLOT 2 DISCRETE OUTPUTS
126	I242	LCP-2023 PLC 2, RACK 1, SLOT 3 AND SLOT 4 ANALOG INPUTS
127	I243	LCP-2023 PLC 2, RACK 1, SLOT 5 ANALOG OUTPUTS
128	I244	LCP-2023 PLC 2, RACK 1, SLOT 6 AND SLOT 7 DISCRETE INPUTS
129	I245	LCP-2023 PLC 2, RACK 1, SLOT 8 AND SLOT 9 DISCRETE INPUTS
130	I250	LCP-2014 PANEL LAYOUT
* 131	I251	LCP-2014 TERMINAL STRIP ASSEMBLIES AND BILL OF MATERIALS
132	I252	LCP-2014 PANEL WIRING DIAGRAM
133	I253	LCP-2014 PANEL WIRING DIAGRAM
134	I254	LCP-2014 POWER WIRING SCHEMATIC
135	I255	LCP-2014 POWER WIRING SCHEMATIC
136	I256	LCP-2014 POWER WIRING SCHEMATIC
* 137	I257	LCP-2014 PLC RACK ASSEMBLY
138	I258	LCP-2014 PLC 3, RACK 1, SLOT 1 DISCRETE OUTPUTS
139	I259	LCP-2014 PLC 3, RACK 1, SLOT 2 ANALOG INPUTS
140	I260	LCP-2014 PLC 3, RACK 1, SLOT 3 ANALOG INPUTS
141	I261	LCP-2014 PLC 3, RACK 1, SLOT 4 ANALOG OUTPUTS
142	I262	LCP-2014 PLC 3, RACK 1, SLOT 5 DISCRETE INPUTS
143	I263	LCP-2014 PLC 3, RACK 1, SLOT 6 DISCRETE INPUTS
144	I264	LCP-2014 PLC 3, RACK 1, SLOT 7 DISCRETE INPUTS
145	1265	LCP-2014 PLC 3, RACK 1, SLOT 8 DISCRETE INPUTS
* 146	I300	LCP-3600 PLC RACK ASSEMBLY
147	I301	LCP-3600 PLC 1, RACK 1, SLOT 1 AND SLOT 2 DISCRETE INPUTS
148	I302	LCP-3600 PLC 1, RACK 1, SLOT 3 AND SLOT 4 DISCRETE INPUTS
149	I303	LCP-3600 PLC 1, RACK 1, SLOT 5 AND SLOT 6 DISCRETE INPUTS
150	I304	LCP-3600 PLC 1, RACK 1, SLOT 7 AND SLOT 8 DISCRETE INPUTS
151	I305	LCP-3600 PLC 1, RACK 1, SLOT 9 DISCRETE INPUTS
152	I306	LCP-3600 PLC 1, RACK 1, SLOT 10 AND SLOT 11 DISCRETE OUTPUTS
153	I307	LCP-3600 PLC 1, RACK 2, SLOT 0 AND SLOT 1 DISCRETE OUTPUTS
154	I308	LCP-3600 PLC 1, RACK 2, SLOT 2 AND SLOT 3 DISCRETE OUTPUTS
155	I309	LCP-3600 PLC 1, RACK 2, SLOT 4 AND SLOT 5 ANALOG INPUTS
156	I310	LCP-3600 PLC 1, RACK 2, SLOT 6 ANALOG INPUTS
157	I311	LCP-3600 PLC 1, RACK 2, SLOT 7 AND SLOT 8 ANALOG OUTPUTS

* ADDENDUM NO. 1

	REVISIONS	DATE	BY
1	CONFORMED SET	8/22/18	AM

DESIGNED A. MAAS
DRAWN D. PETERSON
CHECKED L. ROSCOE
APPROVED B. BUNKER

ONE INCH AT FULL SCALE. IF NOT, SCALE ACCORDINGLY

FILE NAME PS1598102-G2
JOB No. 216-1598-102
DATE FEBRUARY 2018

ALLAN MAAS — STATE OF WASHINGTON — 27045 — REGISTERED PROFESSIONAL ENGINEER

AUGUST 22, 2018

Parametrix
ENGINEERING . PLANNING . ENVIRONMENTAL SCIENCES
1019 39TH AVENUE SE, SUITE 100 | PUYALLUP, WA 98374
P 253.604.6600
WWW.PARAMETRIX.COM

PROJECT NAME
THE CONSOLIDATED BOROUGH OF QUIL CEDA VILLAGE
MBR TREATMENT FACILITY UPGRADE
TULALIP, WASHINGTON

SHEET INDEX

DRAWING NO. 2 OF 157
G2

LAYOUT: G2 PATH: U:\PSO\Projects\Clients\1598-TulalipTribes\216-1598-102 MBR Upgrade\99Svcs\CADD\DWG PLOTTED BY: peterden DATE: Wednesday, August 22, 2018 8:59:08 AM

ABBREVIATIONS:

AFF	ABOVE FINISH FLOOR
AL	ALUMINUM
ASSY	ASSEMBLY
ARV	AIR RELEASE VALVE
BF	BUTTERFLY VALVE
BOD	BOTTOM OF DUCT
CFM	CUBIC FEET PER MINUTE
CL	CHLORINE, CLASS, CENTER LINE
CLR	CLEAR, CLEARANCE
CLS	CHLORINE SOLUTION (HYPOCHLORITE)
CMU	CONCRETE MASONRY UNIT
CO	COUNTY, CLEANOUT
COL	COLUMN
CONC	CONCRETE
CONT	CONTINUE, CONTINUOUS
CSBC	CRUSHED SURFACING BASE COURSE
D	DEPTH, DENSITY, DRAIN, DRAINAGE
EF	EACH FACE, EXHAUST FAN
EHG	ELECTROLYTIC HYPOCHLORITE GENERATOR
EL	ELEVATION
ELEV	ELEVATION
EW	EACH WAY
EX	EXISTING
FC	FLEXIBLE CONNECTION
FD	FLOOR DRAIN
FLG	FLANGE, FLANGED
FRP	FIBERGLASS REINFORCED PLASTIC
GA	GAGE
GALV	GALVANIZED
GWB	GYPSUM WALL BOARD
GV	GATE VALVE
HDG	HOT DIPPED GALVANIZED
HMA	HOT MIX ASPHALT
HTP	HEAT PUMP
HYD	HYDRAULIC
ID	INSIDE DIAMETER
IE	INVERT ELEVATION
LI	LEVEL INDICATOR
LS	LEVEL SWITCH
MAX	MAXIMUM
MBR	MEMBRANE BIOLOGICAL REACTOR
MIN	MINIMUM, MINUTE
MJ–R	MECHANICAL JOINT–RESTRAINED
N.C.	NORMALLY CLOSED
NIC	NOT IN CONTRACT
N.O.	NORMALLY OPEN
NOM	NOMINAL
NPT	NATIONAL PIPE THREAD
OC	ON CENTER
OPP	OPPOSITE
PERF	PERFORATE, PERFORATED
PI	PRESSURE INDICATOR
PVC	POLYVINYL CHLORIDE
PW	POTABLE WATER
R	RIGHT, RADIUS
RG	RETURN GRILL
ROW	RIGHT OF WAY
S	SLOPE
SCH	SCHEDULE
SED	SEDIMENTATION
SF	SUPPLY FAN
SG	SLUICE GATE, SUPPLY GRILL
SIM	SIMILAR
SKT	SOCKET THREAD
SL	SLIP
SOG	SLAB ON GRADE
STA	STATION
STD	STANDARD
SQ	SQUARE
SST	STAINLESS STEEL
SV	SOLENOID VALVE
SW	SOFTENED WATER
TI	TEMPERATURE INDICATOR
TM	TURBIDITY MONITOR
TOC	TOP OF CONCRETE, TOP OF CURB
TOD	TOP OF DUCT
TOW	TOP OF WALL
TYP	TYPICAL
UH	UNIT HEATER
V	VALVE, VENT, VOLT
VIC	VICTAULIC
VTR	VENT THROUGH ROOF
W/	WITH

PIPING SYSTEM

SYMBOL	SERVICE
CLS	CHLORINE SOLUTION
D	DRAIN
FE	FINAL EFFLUENT
FM	FORCE MAIN
FOR	FUEL OIL RETURN
FOS	FUEL OIL SUPPLY
GRIT	GRIT UNDERFLOW
GRO	GRIT CLASSIFIER OVERFLOW
HWS	HOT WATER SUPPLY
MBRI	MEMBRANE BIOREACTOR INFLUENT
OA	ODOROUS AIR
OAC	OXALIC ACID
OAE	ODOROUS AIR EXHAUST
OF	OVERFLOW
PA	PROCESS AIR
PD	PUMPED DRAIN
PERM	PERMEATE
PERM	EXPOSED PERMEATE
PF–1	PERFORATED STORM DRAIN AND FOOTING DRAIN
PSRS	PRESCREENED RAW SEWAGE
REC	RECYCLE
SI	SCREENED INFLUENT
SREC	STABILIZED RECYCLE
SS	SANITARY SEWER
STD	STORM DRAIN
STDR	STORM DRAIN
V	VENT
VA	VENT AIR
W1	POTABLE WATER
W2	NON–POTABLE WATER DOWNSTREAM OF BACKFLOW PREVENTER
W3	RECLAIMED WATER
X–CON	ANOXIC BASIN SERIES FLOW CROSS CONNECTION

NOTES:

1. **FOR CLARITY THE P&ID'S SHOW NEW EQUIPMENT AND MATERIALS IN RED LINES. ALL OTHER DRAWINGS SHOW NEW CONSTRUCTION AS BOLD SOLID LINES. REFER TO CIVIL, STRUCTURAL, MECHANICAL, ELECTRICAL AND INSTRUMENTATION DRAWINGS FOR AN ACCURATE AND SCALED REPRESENTATION OF PIPING AND DETAILS INCLUDED IN THE PROJECT CONSTRUCTION.**
2. SST TO DI JOINTS TO ALL HAVE DIELECTRIC ISOLATION.
3. ITEMS SHOWN AS SCREENED ARE EXISTING ITEMS.
4. PER SPECIFICATIONS THIS PROJECT IS DIVIDED INTO SCHEDULE A AND SCHEDULE B CONSTRUCTION. EACH DRAWING IDENTIFIES WHICH SCHEDULE OF WORK IS SHOWN OR DELINEATES AREAS ON THE DRAWING THAT ARE SCHEDULE A OR B. HERE IS A SAMPLE BOX WITH SCHEDULE INFORMATION.

ALL PROJECT WORK OUTSIDE THE BOX NOTED FOR SCHEDULE B, SHALL BE
SCHEDULE A

DETAIL AND SECTION DESIGNATION

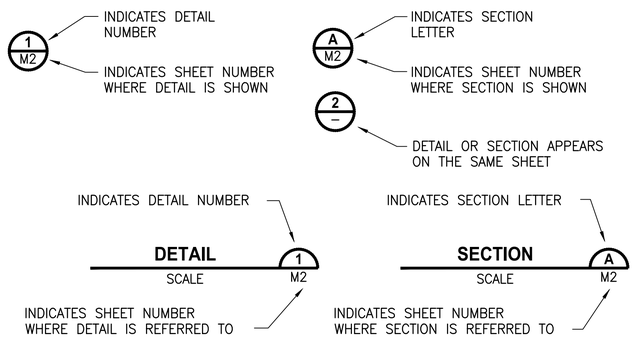

PIPE AND FITTING SYMBOLS:

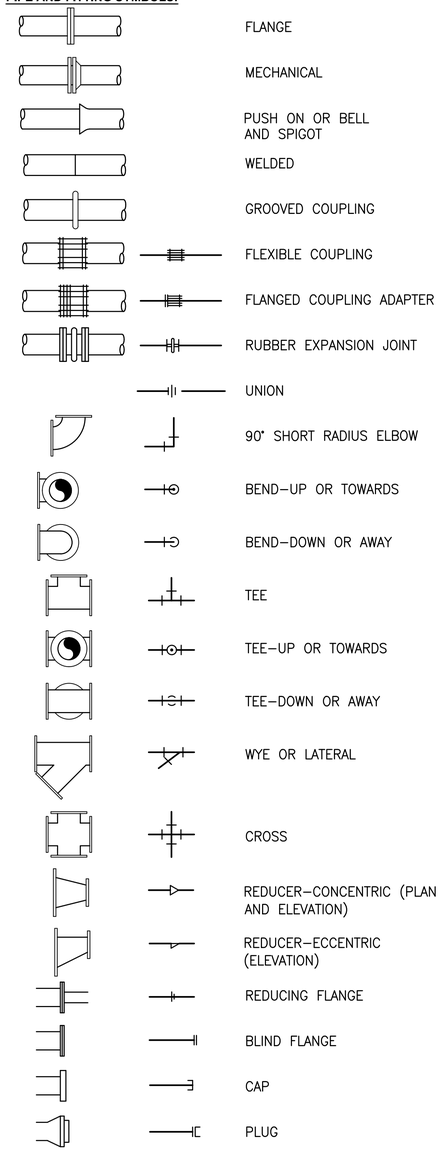

VALVE SYMBOLS:

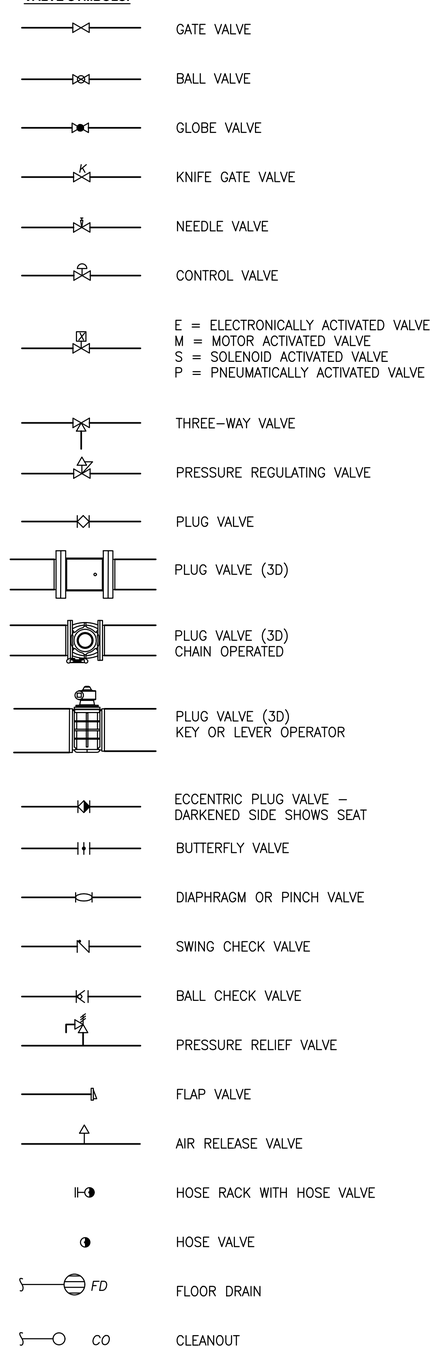

REVISIONS	DATE	BY

DESIGNED A. MAAS
DRAWN D. PETERSON
CHECKED L. ROSCOE
APPROVED B. BUNKER

ONE INCH AT FULL SCALE. IF NOT, SCALE ACCORDINGLY
FILE NAME PS1598102–G3
JOB No. 216–1598–102
DATE FEBRUARY 2018

ALLAN MAAS — STATE OF WASHINGTON — 27045 — REGISTERED PROFESSIONAL ENGINEER

FEBRUARY 23, 2018

Parametrix
ENGINEERING . PLANNING . ENVIRONMENTAL SCIENCES
1019 39TH AVENUE SE, SUITE 100 | PUYALLUP, WA 98374
P.253.604.6600
WWW.PARAMETRIX.COM

PROJECT NAME
THE CONSOLIDATED BOROUGH OF QUIL CEDA VILLAGE MBR TREATMENT FACILITY UPGRADE
TULALIP, WASHINGTON

LEGEND AND ABBREVIATIONS

DRAWING NO. 3 OF 157

G3

PATH: U:\PSO\Projects\Clients\1598–TulalipTribes\216–1598–102 MBR Upgrade\99Svcs\CADD\DWG
LAYOUT: G3
PLOTTED BY: milesdor
DATE: Wednesday, February 21, 2018 6:50:32 AM

VALVES

- GATE VALVE
- 3 WAY VALVE
- 4 WAY VALVE
- BALL VALVE
- BUTTERFLY VALVE
- GLOBE VALVE
- 3 WAY GLOBE VALVE
- PLUG VALVE
- ECCENTRIC PLUG VALVE
- PRESSURE SAFETY VALVE
- PINCH VALVE
- VENTED BALL VALVE
- SWING CHECK VALVE
- WAFER CHECK VALVE
- BALL CHECK VALVE
- DOUBLE DISC CHECK VALVE
- DIAPHRAGM VALVE
- NEEDLE VALVE
- TEMPERING VALVE
- DUCK BILL CHECK VALVE
- MUD VALVE
- AIR RELEASE VALVE
- VACUUM RELEASE VALVE
- COMBINATION AIR/VAC RELEASE VALVE
- BACK PRESSURE REGULATING VALVE, SELF-CONTAINED
- PRESSURE REDUCING REGULATING VALVE, SELF CONTAINED
- SELF ACTUATED REGULATING VALVE W/ EXTERNAL TAP

VALVE IDENTIFIERS

SHADED = CLOSED VALVE

UNSHADED = OPEN VALVE

B / C / A

A = TAG
B = SIZE
C = NORMAL STATE

VALVE OPERATORS

- HAND WHEEL
- MOTORIZED
- CYLINDER OPERATOR
- SOLENOID
- SOLENOID VALVE
- DIAPHRAGM
- DIAPHRAGM PRESSURE BALANCED

PRIMARY ELEMENT SYMBOLS

- ORIFICE PLATE
- AVERAGING PITOT TUBE
- FLUME
- WEIR
- THERMAL MASS FLOWMETER
- D — DENSITY METER
- VORTEX SENSOR
- TARGET TYPE SENSOR
- FLOW NOZZLE
- M — MAGNETIC FLOWMETER
- SONIC FLOWMETER
- VENTURI
- SINGLE PORT PITOT TUBE OR PITOT-VENTURI TUBE
- TURBINE OR PROPELLER-TYPE PRIMARY ELEMENT
- POSITIVE DISPLACEMENT TYPE FLOW TOTALIZING INDICATOR
- X / X — ROTAMETER
- X / X — ROTAMETER WITH INTEGRAL VALVE

LINES

LINE	DESCRIPTION
	MAIN PROCESS FLOW (WITH TYPICAL DIRECTION OF FLOW SHOWN)
	MAIN (EXISTING)
	SUBSIDIARY PROCESS FLOW
	SUBSIDIARY (EXISTING)
	INSTRUMENT SUPPLY, PROCESS TAPS, NON PROCESS FLOW
120V	ELECTRIC POWER SUPPLY 120VAC, 60HZ U.N.O.
XX	SERVICE AIR OR INSTRUMENT AIR SUPPLY
	STRUCTURES AND SPECIAL EQUIPMENT
	AIR LINE
	EQUIPMENT BOUNDARY

X | DWG # — DESCRIPTION — CONNECTION TO PROCESS WITHIN PROJECT

(FOR REFERENCE ONLY. SEE SITE AND MECHANICAL DRAWINGS)

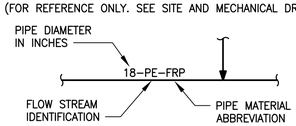

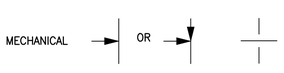

SYMBOLS

- REDUCER
- FLANGE
- UNION
- Y STRAINER
- FLOW STRAIGHTENING VANE
- WELDED CAP
- CAP OR PLUG
- BLIND FLANGE
- PURGE
- DRAIN
- HOSE BIBB CONNECTION
- TEE
- CHEMICAL PIPING FLEXIBLE CONNECTION/ FLEXIBLE HOSE
- FLEXIBLE TANK CONNECTION
- BRAIDED METAL HOSE
- METAL BELLOWS
- EXPANSION JOINT
- FLEXIBLE COUPLING
- FLANGED COUPLING ADAPTER
- W — PUMP SEAL OR VALVE WATER SUPPLY, PLANT WATER
- PRESSURE GAUGE
- SPRAY NOZZLE
- M — MOTOR
- M — REGULATING MOTOR
- DIAPHRAGM SEAL
- ANNULAR SEAL
- RUPTURE DISK, PRESSURE
- RUPTURE DISK, VACUUM
- WATER HAMMER ARRESTOR
- EYE WASH
- H — HORN UNIT
- S — STROBE UNIT
- FAN
- WATER LINE
- EJECTOR
- F — FILTER OR SEPARATOR

SYMBOLS

- AIR RELEASE
- CALIBRATION CYLINDER
- HEAT TRACE
- AUGER
- SYSTEM CONNECTION OUTSIDE PROJECT
- T — DRIP TRAP
- IN-LINE PRESSURE SENSOR
- THERMOWELL
- PULSATION DAMPENER
- STATIC MIXER
- VENT
- FLAME ARRESTOR
- BUBBLER
- SNUBBER
- GRAVITY FLOW
- DISCONNECT
- * — DENOTES SUPPLIED BY MFR

SYMBOLS

- CENTRIFUGAL PUMP
- SUBMERSIBLE PUMP – RAIL MOUNTED
- METERING PUMP
- PROGRESSIVE CAVITY PUMP
- SUBMERSIBLE PUMP
- PERISTALTIC PUMP
- BLOWER
- TURBINE PUMP
- BACKFLOW PREVENTER
- SILENCER
- AIR COMPRESSOR
- INTAKE SCREEN/ FILTER/ STRAINER
- M — SUBMERSIBLE MIXER
- MIXER
- NO / NC — SLUICE GATE
- FLAP GATE
- NO / NC — STOP GATE
- NO / NC — SLIDE GATE

SYMBOLS

- 55 GAL DRUM
- TANK
- PRESSURE VESSEL
- HEAT EXCHANGER
- HORIZONTAL SCREW CONVEYOR
- VERTICAL SCREW CONVEYOR
- VERTICAL TURBINE PUMP CAN
- VERTICAL TURBINE PUMP INTAKE
- VERTICAL TURBINE PUMP HEAD
- VERTICAL TURBINE PUMP T-HEAD

ABBREVIATIONS

A53 – CARBON STEEL
AAS – ALKALINITY ADJUSTMENT SOLUTION
AC – ACID
AL – ALUM
AS – AIR SUPPLY
BS – BLOCK STEEL
BW – BELT WASH WATER
BWR – BELT WASH WATER RECYCLE
CA – COMPRESSED AIR
CD – CONDENSATE
CI – CAST IRON
COMB – COMBUSTIBLES
CP – CONTROL PANEL
CPA – CONTROL POWER AVAILABLE
CU – COPPER
D – GRAVITY DRAIN
DAFT – DISSOLVED AIR FLOATATION THICKENER
DI – DUCTILE IRON
DIS – DISTILLED WATER
DS – DIGESTED SLUDGE
ECR – EFFLUENT COOLING RETURN
ECS – EFFLUENT COOLING SUPPLY
ED – EQUIPMENT DRAIN
EX – EXISTING
EFF – EFFLUENT
ES – ELECTRICAL SUPPLY
E-STOP – EMERGENCY STOP
F – FIRE SPRINKLER
FC – FAIL CLOSED
FD – FLOOR DRAIN
FE – FINAL EFFLUENT
FIL – FILTRATE
FL – FAIL LAST
FLT – FAULT
FO – FAIL OPEN
FOR – FUEL OIL RETURN
FOS – FUEL OIL SUPPLY
FV – FUEL OIL, GASOLINE OR OIL VENT
G – STOP GATE
GR – GRIT
GRC – GAS RE-CIRCULATION
GS – GALVANIZED STEEL
HS2 – HYDROGEN SULFIDE
HDPE – HIGH DENSITY POLYTHENE
HIM – HUMAN INTERFACE MODULE
HOA – HAND-OFF-AUTO
HOR – HAND-OFF-REMOTE
HP – HORSEPOWER
HWL – HIGH WATER LINE
HWS – DOMESTIC HOT WATER SUPPLY
IA – INSTRUMENT AIR
ISB – INTRINSIC SAFETY BARRIER
ISR – INTRINSIC SAFETY RELAY
I/O – ON/OFF
JOR – JOG-OFF-REMOTE
LCP – LOCAL CONTROL PANEL
LOR – LOCAL-OFF-REMOTE
LSR – LOWER-STOP-RAISE
MLR – MIXED LIQUOR RECYCLE
MS – MOTOR STARTER
MUD – MUD VALVE
MV – MOTORIZED VALVE
NaOH – SODIUM HYDROXIDE
NC – NORMALLY CLOSED
NG – NATURAL GAS
NO – NORMALLY OPEN
NPW – NON-POTABLE WATER
OA – ODOROUS AIR
OC – OPEN/CLOSE
OF – OVERFLOW
OSC – OPEN-STOP-CLOSE
OSCA – OPEN/STOP/ CLOSE/AUTO
OT – OVER TEMP
PA – PROCESS AIR
PD – PUMPED DRAINAGE
PE – POLYTHENE
PLC – PROGRAMMABLE LOGIC CONTROLLER
POL – POLYMER SOLUTION
POT – POTENTIOMETER
PRS – PROCESS SAMPLING
PSV – PRESSURE SAFETY VALVE
PV – PNEUMATIC VALVE
PVC – POLYVINYL CHLORIDE
Q – FLOW
RCP – REINFORCED CONCRETE PIPE
RNG – RUNNING
RP – RAW POLYMER
RS – RAW SEWAGE
RW – REUSE WATER
SA – SERVICE AIR
SC – SCUM
SD – SANITARY DRAIN
SDS – SCREENED/DEGRITTED RAW SEWAGE
SE – SECONDARY EFFLUENT
SF – SEAL FAILURE
SG – SLUICE GATE
SLG – SLIDE GATE
SN – SUPERNANANT
SS – STAINLESS STEEL
STD – STORM DRAIN
SV – SOLENOID VALVE
TD – TANK DRAIN
THS – THICKENED SLUDGE
TO – THICKENER OVERFLOW
TURB – TURBIDITY
UNO – UNLESS NOTED OTHERWISE
V – VENT
VAC – VACUUM
VFC – VALVE FULLY CLOSED
VFD – VARIABLE FREQUENCY DRIVE
VFO – VALVE FULLY OPEN
WP – POTABLE WATER
WNP – NON-POTABLE WATER
WRS – RECLAIMED WATER
WML – WASTE MIXED LIQUOR

TYPICAL CONNECTION

- X / X — IN-LINE DEVICE
- X / X — DIRECT CONNECTION TO PROCESS
- X / X — TEMPERATURE ELEMENT WITH WELL
- X / X — RADIATION OR SONIC SENSING
- X / X — FILLED SYSTEM, DIAPHRAGM SEAL CONNECTION

EQUIPMENT LABELING CONVENTION

EQUIPMENT TYPE — ID# — XX-####

EQUIPMENT			
BLOWER	B	PUMP	P
COMPRESSOR	C	SCREEN	SC
STOP GATE	G	SAMPLER	SMP
MOTOR	M	TANK	T
MIXER	MIX	VALVE	V
ODOR CONTROL UNIT	OCU		

NOTES

1. THIS IS A GENERALIZED LEGEND SHEET. THIS CONTRACT MAY NOT USE ALL INFORMATION SHOWN.
2. SEE ALSO ISA S5.1, S5.3 AND S7.3.
3. INSTRUMENTS MARKED WITH AN ASTERISK ARE FURNISHED WITH THE EQUIPMENT.
4. REFER TO ISA PR7.7 FOR INSTRUMENT AIR QUALITY STANDARDS.

PROCESS ONLY — INSTRUMENTATION ONLY

ALAN MAAS — STATE OF WASHINGTON — 27045 — REGISTERED PROFESSIONAL ENGINEER

ARTHUR G. STOKES — STATE OF WASHINGTON — 34736 — REGISTERED PROFESSIONAL ENGINEER

FEBRUARY 23, 2018

	REVISIONS	DATE	BY

DESIGNED A. MAAS
DRAWN D. PETERSON
CHECKED L. ROSCOE
APPROVED B. BUNKER

ONE INCH AT FULL SCALE. IF NOT, SCALE ACCORDINGLY

FILE NAME PS1598102-P1
JOB No. 216-1598-102
DATE FEBRUARY 2018

Parametrix
ENGINEERING . PLANNING . ENVIRONMENTAL SCIENCES
1019 39TH AVENUE SE, SUITE 100 | PUYALLUP, WA 98374
P 253.604.6600
WWW.PARAMETRIX.COM

PROJECT NAME
THE CONSOLIDATED BOROUGH OF QUIL CEDA VILLAGE
MBR TREATMENT FACILITY UPGRADE
TULALIP, WASHINGTON

P&ID PROCESS LEGEND AND ABBREVIATIONS

DRAWING NO. 4 OF 157

P1

PATH: U:\PSO\Projects\Clients\1598-TulalipTribes\216-1598-102 MBR Upgrade\99Svcs\CADD\DWG
PLOTTED BY: peterden DATE: Tuesday, February 20, 2018 12:57:01 PM
LAYOUT: P1

INSTRUMENT IDENTIFICATION LETTERS

	FIRST LETTERS (1)		SUCCEEDING LETTERS (15)		
	MEASURED/INITIATING VARIABLE	VARIABLE MODIFIER (10)	READOUT OR PASSIVE FUNCTION	OUTPUT/ACTIVE FUNCTION	FUNCTION MODIFIER
A	ANALYSIS (2)(3)(4)		ALARM		
B	BURNER, COMBUSTION (2)		USER'S CHOICE (5)	USER'S CHOICE (5)	USER'S CHOICE (5)
C	USER'S CHOICE (3a)(5)			CONTROL (23a)(23e)	CLOSE (27b)
D	USER'S CHOICE (3a)(5)	DIFFERENTIAL, DIFFERENCE (11a)(12a)			DEVIATION (28)
E	VOLTAGE (2)		SENSOR, PRIMARY ELEMENT		
F	FLOW, FLOW RATE (2)	RATIO (12b)			
G	USER'S CHOICE		GLASS, GAUGE, VIEWING DEVICE (16)		
H	HAND (2)				HIGH (27a)(28a)(29)
I	CURRENT (2)		INDICATE (17)		
J	POWER (2)		SCAN (18)		
K	TIME, SCHEDULE (2)	TIME, RATE OF CHANGE (12c)(13)		CONTROL STATION (24)	
L	LEVEL (2)		LIGHT (19)		LOW (27b)(28)(29)
M	USER'S CHOICE (3a)(5)				MIDDLE, INTERMEDIATE (27c)(28)(29)
N	USER'S CHOICE (5)		USER'S CHOICE (5)	USER'S CHOICE (5)	USER'S CHOICE (5)
O	USER'S CHOICE (5)		ORIFICE, RESTRICTRION		OPEN (27a)
P	PRESSURE (2)		POINT (TEST CONNECTION)		
Q	QUANTITY (2)	INTEGRATE, TOTALIZE (11b)	INTEGRATE, TOTALIZE		
R	RADIATION (2)		RECORD (20)		RUN
S	SPEED, FREQUENCY (2)	SAFETY (14)		SWITCH (23b)	STOP
T	TEMPERATURE (2)			TRANSMIT	
U	MULTIVARIABLE (2)(6)		MULTIFUNCTION (21)	MULTIFUNCTION (21)	
V	VIBRATION, MECHANICAL ANALYSIS (2)(4)(7)			VALVE, DAMPER, OR LOUVER (23c)(23e)	
W	WEIGHT, FORCE (2)		WELL, PROBE		
X	UNCLASSIFIED (8)	X–AXIS (11c)	ACCESSORY DEVICES (22), UNCLASSIFIED (8)	UNCLASSIFIED (8)	UNCLASSIFIED (8)
Y	EVENT, STATE, PRESENCE (2)(9)	Y–AXIS (11c)		AUXILIARY DEVICE (23d)(25)(26)	
Z	POSITION, DIMENSION (2)	Z–AXIS (11c), SAFETY INSTRUMENTED SYSTEM (30)		DRIVER, ACTUATOR, UNCLASSIFIED FINAL CONTROL ELEMENT	

NOTE: NUMBERS IN PARENTHESES REFER TO THE PRECEDING EXPLANATORY NOTES IN ANSI/ISA–5.1–2009, SECTION 4.2.

GENERAL INSTRUMENT OR FUNCTION SYMBOLS

	FIELD MOUNTED	PRIMARY LOCATION: ACCESSIBLE TO OPERATOR	PRIMARY LOCATION: BEHIND THE PANEL	AUXILIARY LOCATION: ACCESSIBLE TO OPERATOR	AUXILIARY LOCATION: BEHIND THE PANEL
SHARED DISPLAY, SHARED CONTROL	○	○	○	○	○
PROGRAMMABLE LOGIC CONTROL	◇	◇	◇	◇	◇
PILOT LIGHT OR LED	○	○		○	
DISCRETE INSTRUMENTS	○	○	○	○	○

E C
A
B D

A INSTRUMENT IDENTIFICATION LETTERS (SEE TABLE ABOVE)
B LOOP NUMBER
C MODIFIER
D SEQUENCE
E PROCESS CONTROL DESCRIPTORS

INSTRUMENT SHARING COMMON HOUSING

I — PLC INTERLOCK (RLL INTERLOCK)

MS — MOTOR CONTROL CIRCUIT

YQIA — EQUIPMENT STATUS AND ALARM AT OIT (RUN/SPEED/FAIL/ETC.)

VFD — VARIABLE FREQUENCY DRIVE CONTROL CIRCUIT

XS — SELECTOR SWITCH / DATA ENTRY AT HMI

I — HARDWIRED INTERLOCK

DIO — DISTRIBUTED INPUT/OUTPUT

R — MOTOR STARTER MANUAL RESET

DISCRETE INPUT / DISCRETE OUTPUT

ANALOG INPUT / ANALOG OUTPUT

INSTRUMENT LINE SYMBOLS

LINE	DESCRIPTION
	INSTRUMENT SUPPLY, PROCESS TAPS, NON PROCESS FLOW
// //	PNEUMATIC SIGNAL
– – – – – –	ANALOG SIGNAL
–/– – –/– – –/–	DISCRETE SIGNAL
–X–X–	CAPILLARY TUBE OR FILLED SYSTEM
~ ~	ELECTROMAGNETIC OR SONIC SIGNAL (GUIDED)
~ ~ ~	ELECTROMAGNETIC OR SONIC SIGNAL (UNGUIDED)
o–o–o–o	SOFTWARE OR DATA LINK
o–o	MECHANICAL LINK
⊥ ⊥	HYDRAULIC
——– – ——–	EQUIPMENT BOUNDARY
F10	FIBER RING
C10	COPPER RING HART
H H	
MB	MODBUS
S S	SERIAL
CN	CONTROL NET
C	COPPER ETHERNET
F	FIBER OPTIC ETHERNET
W	WIRELESS ETHERNET
DN	DEVICENET
PBD	PROFIBUS DP
PBA	PROFIBUS PA

ELECTRICAL — CONNECTED / NOT CONNECTED

X | DWG # — DESCRIPTION — CONNECTION TO PROCESS WITHIN PROJECT

ELECTRICAL SIGNAL LINE ARROW

HARDWARE INTERLOCK

LINE BREAK OR GAP

NOTES

1. THIS IS A GENERALIZED LEGEND SHEET. THIS CONTRACT MAY NOT USE ALL INFORMATION SHOWN.
2. SEE ALSO ISA S5.1, S5.3 AND S7.3.
3. INSTRUMENTS MARKED WITH AN ASTERISK ARE FURNISHED WITH THE EQUIPMENT.
4. REFER TO ISA PR7.7 FOR INSTRUMENT AIR QUALITY STANDARDS.
5. REFER TO DIVISION 17, ABBREVIATION APPENDIX FOR SPECIFIC NOMENCLATURE.

J-4 FUNCTION BLOCK DESIGNATORS

Σ	SUMMING	$\sqrt[n]{}$	ROOT EXTRACTION
Δ	DIFFERENCE	$\sqrt{}$	SQUARE ROOT
∫	INTEGRAL	x^n	EXPONENTIAL
⁄	DERIVATIVE	>	HIGH SELECTING
×	MULTIPLYING	<	LOW SELECTING
÷	DIVIDING	±	BIAS
*/÷	CONVERT:	f(x)	NONLINEAR OR UNSPECIFIED FUNCTION

* E – VOLTAGE, I – CURRENT, P – PNEUMATIC, A – ANALOG, B – BINARY; H – HYDRAULIC, O – ELECTROMAGNETIC, SONIC, R – RESISTANCE (ELECT), D – DIGITAL

J-6 HANDSWITCH DESIGNATORS

HOA	HAND–OFF–AUTO	LR	LOCAL–REMOTE
HOR	HAND–OFF–REMOTE	OC	OPEN–CLOSE
F–R	FORWARD–REVERSE	OCA	OPEN–CLOSE–AUTO
1–0	ON–OFF	A/M	AUTO–MANUAL

INSTRUMENT SERVICES

AS — INSTRUMENT AIR SUPPLY (NOTE 4)

ES — 120 VAC ELECTRICAL SERVICE (DIFFERENT VOLTAGES ARE SPECIFICALLY NOTED)

PROCESS ONLY — ALLAN MAAS, STATE OF WASHINGTON, 27045, REGISTERED PROFESSIONAL ENGINEER

INSTRUMENTATION ONLY — ARTHUR G. STOKES, STATE OF WASHINGTON, 34736, REGISTERED PROFESSIONAL ENGINEER

FEBRUARY 23, 2018

	REVISIONS	DATE	BY

DESIGNED A. MAAS
DRAWN D. PETERSON
CHECKED L. ROSCOE
APPROVED B. BUNKER

ONE INCH AT FULL SCALE. IF NOT, SCALE ACCORDINGLY

FILE NAME PS1598102–P2
JOB NO. 216–1598–102
DATE FEBRUARY 2018

Parametrix
ENGINEERING . PLANNING . ENVIRONMENTAL SCIENCES
1019 39TH AVENUE SE, SUITE 100 | PUYALLUP, WA 98374
P 253.604.6600
WWW.PARAMETRIX.COM

PROJECT NAME
THE CONSOLIDATED BOROUGH OF QUIL CEDA VILLAGE
MBR TREATMENT FACILITY UPGRADE
TULALIP, WASHINGTON

P&ID INSTRUMENTATION LEGEND AND ABBREVIATIONS

DRAWING NO. 5 OF 157

P2

LAYOUT: P2 PATH: U:\PSO\Projects\Clients\1598–TulalipTribes\216–1598–102 MBR Upgrade\99Svcs\CADD\DWG PLOTTED BY: peterden DATE: Tuesday, February 20, 2018 12:58:29 PM

LOCAL CONTROL PANEL LCP-2000

FIELD PROCESS AND CONTROL

TO SCADA

FROM PLANT DRAIN PUMP STATION

PROJECT WORK SHOWN ON THIS DRAWING IS ALL INCLUDED IN SCHEDULE A

YC 1101 | YC 1201 | YC 1601 | YC 1401 | YC 1525

(7)

LCP-1206 | LCP-1606 | LCP-1406

PUMP STATION INFLUENT

V-1110

ME-1100

FINE SCREEN #1 ME-1200

SV-1202 | SV | LT 1205 | M | IA 1204 | W3 | DUMPSTER D-1204

LSHH 1203 | ZS 1207

MANUAL TRANSFER BAG TO CHUTE

30" CHUTE

HS 1105 | SV | W3 | SV-1103 | M | M-1104

ZSO 1104A | ZSC 1104B

SV-1602 | SV | M | IA 1604 | W3 | LE 1603 | ZS 1607 | DUMPSTER D-1604

16" SI CHANNEL #1

STOP GATE

MANUAL TRANSFER BAG TO CHUTE

FINE SCREEN #3 ME-1600

SV-1402 | SV | LT 1405 | M | IA 1404 | W3 | DUMPSTER D-1404

LSHH 1403 | ZS 1407

18" SI CHANNEL #3

MANUAL TRANSFER BAG TO CHUTE

18" SI SCREENED INFLUENT

Q | P102 TO POST MEMBRANE TANK

ME-1300

FUTURE

FINE SCREEN #2 ME-1400

PUMP STATION INFLUENT

V-1310

20" SI SCREENED INFLUENT

TO ANOXIC TANKS #1 OR #2 OR POST MEMBRANE TANK

30" CHUTE

16" SI CHANNEL #2

WEIR GATE

HS 1305 | SV | W3 | SV-1303

6" PD

VORTEX VALVE

M-1304

4" GRIT

4" GRIT FUTURE

ZSO 1304A | ZSC 1304B

LSHH 1522 | LSH 1522 | LSL 1522 | LSLL 1522

HS 1521

LEL 1512

4" OA

6"x8" | 8"x12"

HS 1511 ES | M | M-1511

VENT

12" OAE

6" OA

12" OA

LEL 1505

V-1507 | V-1506 | HS 1503 ES | M | M-1503

V-1509 | V-1508 | HS 1504 ES | M | M-1504

D-1502

4" GRO

ME-1500 GRIT CLASSIFIER

SCREENING & GRIT HOPPER

ME-1510 ODOR CONTROL

SV-1102 | SV | INTERNAL TIMER | W3 | P-TRAP PRIMER STATION

P-1503 HEADWORKS DRAIN SUMP PUMP #1

P-1504 HEADWORKS DRAIN SUMP PUMP #2

NOTE:

1. NEW EQUIPMENT AND MATERIALS ARE SHOWN IN RED LINES. REFER TO CIVIL, STRUCTURAL, MECHANICAL, ELECTRICAL AND INSTRUMENTATION DRAWINGS FOR AN ACCURATE AND SCALED REPRESENTATION OF PIPING AND DETAILS INCLUDED IN THE PROJECT CONSTRUCTION.

PROCESS ONLY

ALAN MAAS — STATE OF WASHINGTON — 27045 — REGISTERED PROFESSIONAL ENGINEER

INSTRUMENTATION ONLY

ARTHUR G. STOKES — STATE OF WASHINGTON — 34736 — REGISTERED PROFESSIONAL ENGINEER

FEBRUARY 23, 2018

	REVISIONS	DATE	BY

DESIGNED A. MAAS
DRAWN D. PETERSON
CHECKED L. ROSCOE
APPROVED B. BUNKER

ONE INCH AT FULL SCALE. IF NOT, SCALE ACCORDINGLY

FILE NAME P515981102-P101
JOB No. 216-1598-102
DATE FEBRUARY 2018

Parametrix
ENGINEERING . PLANNING . ENVIRONMENTAL SCIENCES
1019 39TH AVENUE SE, SUITE 100 | PUYALLUP, WA 98374
P 253.604.6600
WWW.PARAMETRIX.COM

PROJECT NAME
THE CONSOLIDATED BOROUGH OF QUIL CEDA VILLAGE
MBR TREATMENT FACILITY UPGRADE
TULALIP, WASHINGTON

P&ID
GRIT REMOVAL SCREENING AND GRIT CLASSIFIER

DRAWING NO. 6 OF 157

P101

PATH: U:\PSO\Projects\Clients\1598-TulalipTribes\216-1598-102 MBR Upgrade\99Svcs\CADD\DWG PLOTTED BY: milesdor DATE: Wednesday, February 21, 2018 1:18:03 PM
LAYOUT: P101

LOCAL CONTROL PANEL LCP–1000

FIELD PROCESS AND CONTROL

TO SCADA

YC 1601 · YC 1701 · YC 1801 · YC 1901

LIT 1606

Q | P101
SCREENED INFLUENT FROM CHANNEL #3

SCREENED INFLUENT FROM CHANNEL #1

20" SI

18" SI

HS 1602 · LSO 1602 · LSC 1602

DOT 1605 · DOE 1605

HS 1603 · LE 1604 · VENT

M–1603

N.C. V–1602

SAMPLE

POST MEMBRANE TANK TK–1600

DRAIN

HS 1702 · LSO 1702 · LSC 1702

V–1702

SAMPLE

16" SI

V1802

SAMPLE

16" SREC

V–1815

SAMPLE

HS 1802 · LSO 1802 · LSC 1802

DOT 1803 · DOE 1803 · HS 1803 · LE 1803 · VENT

M–1803

ANOXIC TANK #2 TK–1800

N.C. DRAIN

24" SLUICE GATE V–1816

OVERFLOW

V–1806

V–1807

DOT 1904 · DOE 1904 · VENT · LE 1905

DOT 1906 · DOE 1906

16" MBRI

SAMPLE

3

V–1716

N.C.

DOT 1703 · DOE 1703 · HS 1703 · LE 1703 · VENT

24" SLUICE GATE V–1717

OVERFLOW

M–1703

SAMPLE

SAMPLE

SAMPLE

ANOXIC TANK #1 TK–1700

N.C. DRAIN

V–1715

V–1706

SAMPLE

V–1707

SAMPLE

V–1819

N.C.

V–1924

N.C.

DRAIN

PRE–AERATION TANK TK–1900

V–1919

24"

V–1918

SAMPLE

SAMPLE

3

R | P205
MBR#1&#3

S | P206
MBR #2 & #4

HS 1930 · HS 1931

PRE–MEMBRANE #1 AERATION BLOWER ME–1902

PRE–MEMBRANE #2 AERATION BLOWER ME–1903

2

FOR THIS DRAWING, ONLY PROJECT WORK INSIDE THIS BOX IS INCLUDED IN
SCHEDULE B

16" REC

V–1615

V–1719

N.C.

V–1616

P203 | T
FROM MIXED LIQUOR RECYCLE PUMPS #1&#3

P204 | U
FROM MIXED LIQUOR RECYCLE PUMPS #2&#4

NOTE:

1. NEW EQUIPMENT AND MATERIALS ARE SHOWN IN RED LINES. REFER TO CIVIL, STRUCTURAL, MECHANICAL, ELECTRICAL AND INSTRUMENTATION DRAWINGS FOR AN ACCURATE AND SCALED REPRESENTATION OF PIPING AND DETAILS INCLUDED IN THE PROJECT CONSTRUCTION.

(2) REPLACE EXISTING.

(3) REMOVE EXISTING 12" MBRI PIPE TEES AND REDUCERS AND REPLACE WITH 20" MBRI. DI BELOW GRATING AND SST ABOVE GRATING. GIVE 12" SST PIPE TO OWNER.

ALL PROJECT WORK OUTSIDE THE BOX NOTED FOR SCHEDULE B, SHALL BE
SCHEDULE A

PATH: U:\PSO\Projects\Clients\1598–TulalipTribes\216–1598–102 MBR Upgrade\99Svcs\CADD\DWG PLOTTED BY: peterden DATE: Friday, February 23, 2018 3:01:03 PM LAYOUT: P102

	REVISIONS	DATE	BY

DESIGNED A. MAAS
DRAWN D. PETERSON
CHECKED L. ROSCOE
APPROVED B. BUNKER

ONE INCH AT FULL SCALE. IF NOT, SCALE ACCORDINGLY

FILE NAME P51598102–P102
JOB No. 216–1598–102
DATE FEBRUARY 2018

PROCESS ONLY — JOHN MAAS — STATE OF WASHINGTON — 27045 — REGISTERED PROFESSIONAL ENGINEER

INSTRUMENTATION ONLY — ARTHUR G. STOKES — STATE OF WASHINGTON — 34736 — REGISTERED PROFESSIONAL ENGINEER

FEBRUARY 23, 2018

Parametrix
ENGINEERING . PLANNING . ENVIRONMENTAL SCIENCES
1019 39TH AVENUE SE, SUITE 100 | PUYALLUP, WA 98374
P 253.604.6600
WWW.PARAMETRIX.COM

PROJECT NAME
THE CONSOLIDATED BOROUGH OF QUIL CEDA VILLAGE MBR TREATMENT FACILITY UPGRADE
TULALIP, WASHINGTON

P&ID
POST MEMBRANE, ANOXIC TANKS & PRE-MEMBRANE AERATION TANK

DRAWING NO. 7 OF 157

P102

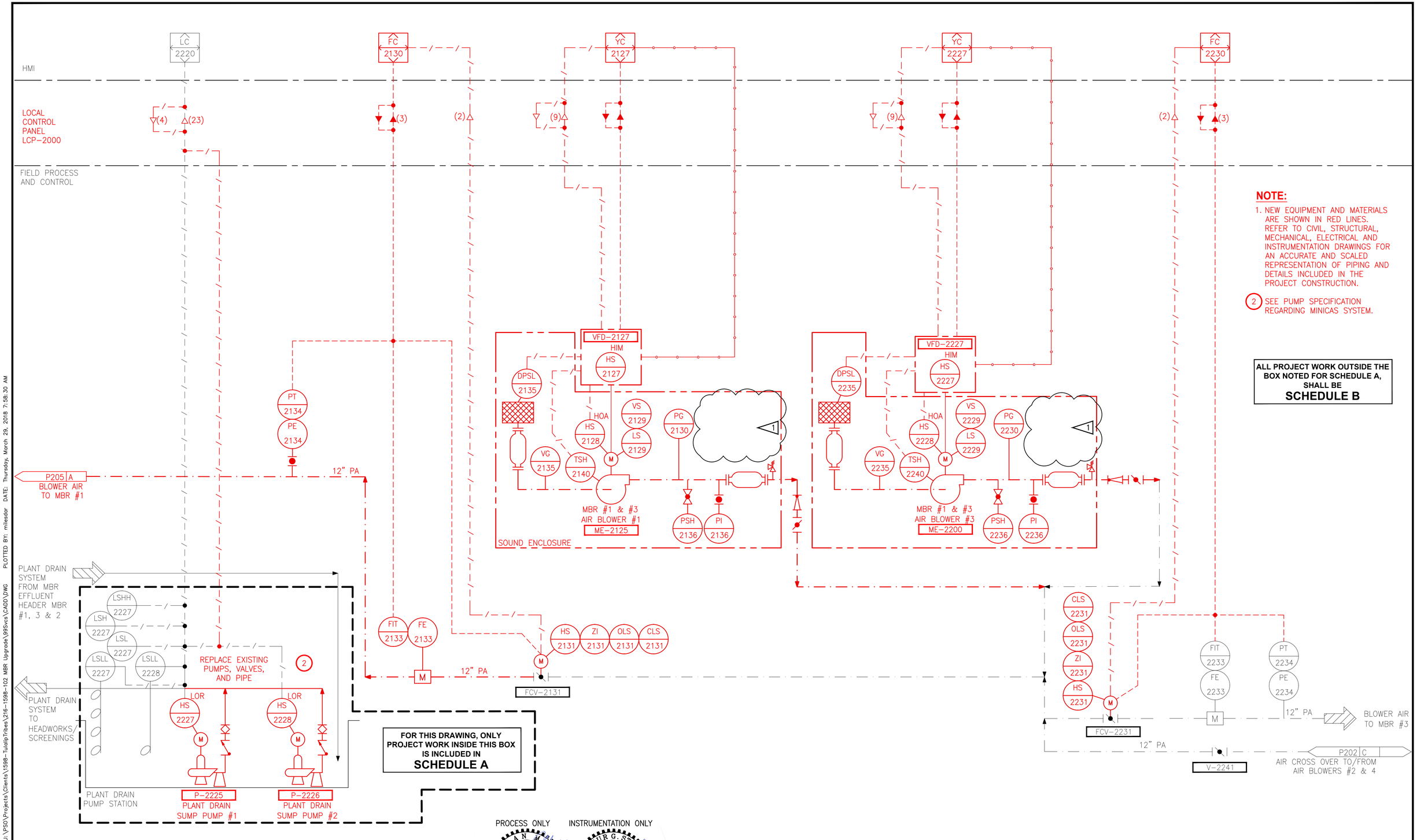

NOTE:

1. NEW EQUIPMENT AND MATERIALS ARE SHOWN IN RED LINES. REFER TO CIVIL, STRUCTURAL, MECHANICAL, ELECTRICAL AND INSTRUMENTATION DRAWINGS FOR AN ACCURATE AND SCALED REPRESENTATION OF PIPING AND DETAILS INCLUDED IN THE PROJECT CONSTRUCTION.

2 SEE PUMP SPECIFICATION REGARDING MINICAS SYSTEM.

ALL PROJECT WORK OUTSIDE THE BOX NOTED FOR SCHEDULE A, SHALL BE SCHEDULE B

FOR THIS DRAWING, ONLY PROJECT WORK INSIDE THIS BOX IS INCLUDED IN SCHEDULE A

PROCESS ONLY

INSTRUMENTATION ONLY

ALLAN MAAS, STATE OF WASHINGTON, 27045, REGISTERED PROFESSIONAL ENGINEER

ARTHUR G. STOKES, STATE OF WASHINGTON, 34736, REGISTERED PROFESSIONAL ENGINEER

MARCH 29, 2018

▷	REVISIONS	DATE	BY
1	REMOVE LCPs	3-29-18	AM

DESIGNED A. MAAS/A. STOKES
DRAWN D. PETERSON/J. VONDERAHE
CHECKED L. ROSCOE
APPROVED B. BUNKER

ONE INCH AT FULL SCALE. IF NOT, SCALE ACCORDINGLY
FILE NAME PS1598102-P201
JOB No. 216-1598-102
DATE FEBRUARY 2018

Parametrix
ENGINEERING . PLANNING . ENVIRONMENTAL SCIENCES
1019 39TH AVENUE SE, SUITE 100 | PUYALLUP, WA 98374
P 253.604.6600
WWW.PARAMETRIX.COM

PROJECT NAME
THE CONSOLIDATED BOROUGH OF QUIL CEDA VILLAGE
MBR TREATMENT FACILITY UPGRADE
TULALIP, WASHINGTON

P&ID
PLANT DRAIN PS AND MBR #1 & #3 PROCESS AIR BLOWERS

DRAWING NO. 8 OF 157

P201

PATH: U:\PSO\Projects\Clients\1598-TulalipTribes\216-1598-102 MBR Upgrade\99Svcs\CADD\DWG PLOTTED BY: milesdar DATE: Thursday, March 29, 2018 7:58:30 AM
LAYOUT: P201

HMI

LOCAL CONTROL PANEL LCP–2000

FIELD PROCESS AND CONTROL

FC 2330 (3) (2)

YC 2327 (9)

YC 2427 (9)

FC 2330 (2) (3)

FOR THIS DRAWING, ONLY PROJECT WORK INSIDE THIS BOX IS INCLUDED IN
SCHEDULE A

ALL PROJECT WORK OUTSIDE THE BOX NOTED FOR SCHEDULE A, SHALL BE
SCHEDULE B

NOTE:

1. NEW EQUIPMENT AND MATERIALS ARE SHOWN IN RED LINES. REFER TO CIVIL, STRUCTURAL, MECHANICAL, ELECTRICAL AND INSTRUMENTATION DRAWINGS FOR AN ACCURATE AND SCALED REPRESENTATION OF PIPING AND DETAILS INCLUDED IN THE PROJECT CONSTRUCTION.

VFD–2327
STOP
PS 2335
HS 2327
(2)
HOA
HS 2328
X 2330
X 2329
M
M–2128
LCP–2325
TSH 2340
MBR #2 & #4 AIR BLOWER #2
ME–2325
PSH 2336
PI 2338
SOUND ENCLOSURE

VFD–2427
STOP
PS 2435
HS 2427
(2)
HOA
HS 2428
X 2430
X 2429
M
LCP–2425
TSH 2440
MBR #2 & #4 AIR BLOWER #4
ME–2400
PSH 2436
PI 2438
SOUND ENCLOSURE

PT 2334
PE 2334
12" PA
BLOWER AIR TO MBR #2

FIT 2333
FE 2333
M
12" PA
HS 2331
ZI 2331
OLS 2331
CLS 2331
M
FCV–2331

CLS 2431
OLS 2431
ZI 2431
HS 2431
M
FCV–2431
FIT 2433
FE 2433
M
PT 2434
PE 2434
12" PA
B P206
BLOWER AIR TO MBR #4
12" PA
P201 C
AIR CROSS OVER TO/FROM AIR BLOWERS #1 & 3

SV–2113
S
W3
INTERVAL TIMER
P–TRAP PRIMER STATION

PROCESS ONLY
ALAN MAAS
STATE OF WASHINGTON
27045
REGISTERED PROFESSIONAL ENGINEER

INSTRUMENTATION ONLY
ARTHUR G. STOKES
STATE OF WASHINGTON
34738
REGISTERED PROFESSIONAL ENGINEER
FEBRUARY 23, 2018

	REVISIONS	DATE	BY

DESIGNED A. MAAS/A. STOKES
DRAWN D. PETERSON/J. VONDERAHE
CHECKED L. ROSCOE
APPROVED B. BUNKER

ONE INCH AT FULL SCALE. IF NOT, SCALE ACCORDINGLY

FILE NAME PS1598102–P202
JOB No. 216–1598–102
DATE FEBRUARY 2018

Parametrix
ENGINEERING . PLANNING . ENVIRONMENTAL SCIENCES
1019 39TH AVENUE SE, SUITE 100 | PUYALLUP, WA 98374
P 253.604.6600
WWW.PARAMETRIX.COM

PROJECT NAME
THE CONSOLIDATED BOROUGH OF QUIL CEDA VILLAGE
MBR TREATMENT FACILITY UPGRADE
TULALIP, WASHINGTON

P&ID
MBR #2 & #4 PROCESS AIR BLOWERS

DRAWING NO. 9 OF 157

P202

PATH: U:\PSO\Projects\Clients\1598–TulalipTribes\216–1598–102 MBR Upgrade\99Svcs\CADD\DWG
PLOTTED BY: peterden DATE: Tuesday, February 20, 2018 12:49:12 PM
LAYOUT: P202

HMI

LOCAL CONTROL PANEL LCP–2000

LOCAL CONTROL PANEL LCP–2023

LOCAL CONTROL PANEL LCP–2014

FIELD PROCESS AND CONTROL

FC 2101

(7)

VFD–2175 HIM HS 2175

VFD–2150 HIM HS 2150

VFD–2106 HIM HS 2106

FOR THIS DRAWING, ONLY PROJECT WORK INSIDE THIS BOX IS INCLUDED IN SCHEDULE A

P204 | M CONNECTION TO MBR #2 & #4 REC

16" REC V–2188

BLIND FLANGE W/DRAIN 3" V–2109

16" REC V–2187

RECYCLE MIXED LIQUOR TO POST MBR AND ANOXIC TANKS #1 & #2

4" WS

P204 | W WASTE SLUDGE TO LOADOUT

V–2110

8" REC

ARV 2100

PI 2102

V–2107

SAMPLE

V–2108

HOA HS 2100

M

P–2100 MIXED LIQUOR RECYCLE PUMP #1

10" REC V–2105

FIT 2104

FE 2104

VENT

12" REC

M

SAMPLE

V–2522

P205 | D RECYCLE MIXED LIQUOR FROM MBR #1

8" REC

ARV 2150

PI 2152

V–2179

SAMPLE

V–2178

HOA HS 2150

M

P–2150 MIXED LIQUOR RECYCLE BACK–UP PUMP #1 & #3

10" REC V–2180

V–2182

12"

V–2183

FIT 2111

FE 2111

VENT

12" REC

M

V–2722

RECYCLE MIXED LIQUOR FROM MBR #3

12" REC

V–2132

P204 | V RECYCLE MIXED LIQUOR CROSS OVER

HOA HS 2175

M

ARV 2175

PI 2177

8" REC

V–2186

SAMPLE

V–2185

MIXED LIQUOR RECYCLE PUMP #3 P–2175

V–2184

10" REC

PG

ROTAMETER

PRV–100

ROTAMETER

ROTAMETER

NOTE:

1. NEW EQUIPMENT AND MATERIALS ARE SHOWN IN RED LINES. REFER TO CIVIL, STRUCTURAL, MECHANICAL, ELECTRICAL AND INSTRUMENTATION DRAWINGS FOR AN ACCURATE AND SCALED REPRESENTATION OF PIPING AND DETAILS INCLUDED IN THE PROJECT CONSTRUCTION.

ALL PROJECT WORK OUTSIDE THE BOX NOTED FOR SCHEDULE A, SHALL BE SCHEDULE B

PROCESS ONLY — ALAN MAAS — STATE OF WASHINGTON — 27045 — REGISTERED PROFESSIONAL ENGINEER

INSTRUMENTATION ONLY — ARTHUR G. STOKES — STATE OF WASHINGTON — 34738 — REGISTERED PROFESSIONAL ENGINEER

FEBRUARY 23, 2018

	REVISIONS	DATE	BY

DESIGNED A. MAAS/A. STOKES
DRAWN D. PETERSON/J. VONDERAHE
CHECKED L. ROSCOE
APPROVED B. BUNKER

ONE INCH AT FULL SCALE. IF NOT, SCALE ACCORDINGLY

FILE NAME PS1598102–P203
JOB No. 216–1598–102
DATE FEBRUARY 2018

Parametrix
ENGINEERING . PLANNING . ENVIRONMENTAL SCIENCES
1019 39TH AVENUE SE, SUITE 100 | PUYALLUP, WA 98374
P 253.604.6600
WWW.PARAMETRIX.COM

PROJECT NAME
THE CONSOLIDATED BOROUGH OF QUIL CEDA VILLAGE MBR TREATMENT FACILITY UPGRADE
TULALIP, WASHINGTON

P&ID
MBR #1 & #3 MIXED LIQUOR RECYCLE PUMPS

DRAWING NO. 10 OF 157

P203

PATH: U:\PSO\Projects\Clients\1598–TulalipTribes\216–1598–102 MBR Upgrade\99Svcs\CADD\DWG
PLOTTED BY: peterden DATE: Friday, February 23, 2018 3:02:46 PM
LAYOUT: P203

HMI

LOCAL CONTROL PANEL LCP–2000

LOCAL CONTROL PANEL LCP–2014

LOCAL CONTROL PANEL LCP–2023

FIELD PROCESS AND CONTROL

FC 2301

FOR THIS DRAWING, ONLY PROJECT WORK INSIDE THIS BOX IS INCLUDED IN SCHEDULE A

(2) (2) (5)

(2) (2) (5)

(2) (2) (5)

P203 | M
CONNECTION TO MBR #1 & #3 REC

V–2188

V–2387

RECYCLE MIXED LIQUOR TO POST MBR AND ANOXIC TANKS #1 & #2

BLIND FLANGE W/DRAIN

4"

V–2309

E–STOP

HS 2312

HS 2312

LSO 2312

LSC 2312

FIT 2311

FE 2311

LCP–2325

M–2312

M

M

V–2312

SLUDGE LOADOUT PAD

4" WS

W | P203
WASTE SLUDGE FROM MBR#1 & #3

V–2310

VFD–2375

STOP

HS 2375

VFD–2350

STOP

HS 2350

VFD–2306

STOP

HS 2306

V–2307

ARV 2300

PI 2302

HOA

HS 2300

M

M–2300

8" REC

V–2308

SAMPLE

P–2300
MIXED LIQUOR RECYCLE PUMP #2

PI 2303

10" REC

V–2305

FIT 2304

FE 2304

VENT

M

SAMPLE

12" REC

V–2422

RECYCLE MIXED LIQUOR FROM MBR #2

V–2379

ARV 2350

PI 2352

HOA

HS 2350

PI 2351

M

M–2150

8" REC

V–2378

SAMPLE

P–2350
MIXED LIQUOR RECYCLE BACK–UP PUMP #2 & #4

10" REC

V–2380

V–2382

12"

V–2385

ARV 2375

PI 2377

HOA

HS 2375

PI 2376

M

8" REC

SAMPLE

V–2386

P–2375
MIXED LIQUOR RECYCLE PUMP #4

10" REC

V–2384

V–2383

VENT

FIT 2313

FE 2313

12" REC

M

P206 | E
RECYCLE MIXED LIQUOR FROM MBR #4

V–2622

12" REC

P203 | V
RECYCLE MIXED LIQUOR CROSS OVER

NOTE:

1. NEW EQUIPMENT AND MATERIALS ARE SHOWN IN RED LINES. REFER TO CIVIL, STRUCTURAL, MECHANICAL, ELECTRICAL AND INSTRUMENTATION DRAWINGS FOR AN ACCURATE AND SCALED REPRESENTATION OF PIPING AND DETAILS INCLUDED IN THE PROJECT CONSTRUCTION.

ALL PROJECT WORK OUTSIDE THE BOX NOTED FOR SCHEDULE A, SHALL BE SCHEDULE B

PROCESS ONLY — ALAN MAAS — STATE OF WASHINGTON — 27045 — REGISTERED PROFESSIONAL ENGINEER

INSTRUMENTATION ONLY — ARTHUR G. STOKES — STATE OF WASHINGTON — 34736 — REGISTERED PROFESSIONAL ENGINEER

FEBRUARY 23, 2018

	REVISIONS	DATE	BY

DESIGNED A. MAAS/A. STOKES
DRAWN D. PETERSON/J. VONDERAHE
CHECKED L. ROSCOE
APPROVED B. BUNKER

ONE INCH AT FULL SCALE. IF NOT, SCALE ACCORDINGLY

FILE NAME PS1598102–P204
JOB No. 216–1598–102
DATE FEBRUARY 2018

Parametrix
ENGINEERING . PLANNING . ENVIRONMENTAL SCIENCES
1019 39TH AVENUE SE, SUITE 100 | PUYALLUP, WA 98374
P 253.604.6600
WWW.PARAMETRIX.COM

PROJECT NAME
THE CONSOLIDATED BOROUGH OF QUIL CEDA VILLAGE MBR TREATMENT FACILITY UPGRADE
TULALIP, WASHINGTON

P&ID MBR #2 & #4 MIXED LIQUOR RECYCLE PUMPS

DRAWING NO. 11 OF 157

P204

PATH: U:\PSO\Projects\Clients\1598–TulalipTribes\216–1598–102 MBR Upgrade\95Svcs\CADD\DWG
PLOTTED BY: peterden DATE: Friday, February 23, 2018 1:53:51 PM
LAYOUT: P204

NOTE:

1. NEW EQUIPMENT AND MATERIALS ARE SHOWN IN RED LINES. REFER TO CIVIL, STRUCTURAL, MECHANICAL, ELECTRICAL AND INSTRUMENTATION DRAWINGS FOR AN ACCURATE AND SCALED REPRESENTATION OF PIPING AND DETAILS INCLUDED IN THE PROJECT CONSTRUCTION.

HMI

LOCAL CONTROL PANEL LCP-2000

LOCAL CONTROL PANEL LCP-2014

FIELD PROCESS AND CONTROL

LC 2508

YC 2501

(3) (5) (2) (2)

LIT 2939

PROJECT WORK SHOWN ON THIS DRAWING IS ALL INCLUDED IN SCHEDULE B

P206 P206 TO LE-2608

LT 2521 LE 2521

VENT

18" CLS RESERVOIR

VENT

2" CLS

2" CLS

2"

CLS FROM GENERATION PLANT

P206 N CLS HEADER TO MBR #2 & #4

FIT 2517 FE 2517

PT 2517 PE 2517

M

TURBIDITY METER X-2504

2" CLS

2" CLS

CLS HEADER TO MBR #3

VENT

VENT

8" UPPER CARTRIDGE PERMEATE COLLECTOR

8" LOWER CARTRIDGE PERMEATE COLLECTOR

2" CLS

M-2506

V-2506

LE 2508

TURBIDITY METER X-2505

R P102 FROM PRE-AERATION TANK

2" V-2523 2" V-2524 2" V-2525 2" V-2526 2" V-2527 2" V-2528 2" V-2529 2" V-2530 2" V-2531 2" V-2532 2" V-2533 2" V-2534 2" V-2535 2" V-2536 2" V-2537 2" V-2538

SAMPLE

MBR 1J MBR 1A MBR 1K MBR 1B MBR 1L MBR 1C MBR 1M MBR 1D MBR 1N MBR 1E MBR 1P MBR 1F MBR 1Q MBR 1G MBR 1R MBR 1H

MEMBRANE BIOREACTOR #1 TANK

TK-2500

OVERFLOW TO MBR #3

REC INFLUENT BOX

4"

DRAIN

V-2522

12" REC

D P203 RECYCLE MIXED LIQUOR TO RECYCLE PUMPS #1 & #3

SAMPLE/ DRAIN

10" PA

MBR1

V-2509 2" V-2510 2" V-2511 2" V-2512 2" V-2513 2" V-2514 2" V-2515 2" V-2516 2"

F P207 MBR #1 PERMEATE MAIN

12" PA

P201 A AIR FROM BLOWERS

ZSO 2503 ZSC 2503

SAMPLE

V-2503

20" MBRI

20" MBRI

INFLUENT TO MBR #3

PROCESS ONLY

LEAN MAAS
STATE OF WASHINGTON
27045
REGISTERED PROFESSIONAL ENGINEER

INSTRUMENTATION ONLY

ARTHUR G. STOKES
STATE OF WASHINGTON
34736
REGISTERED PROFESSIONAL ENGINEER

FEBRUARY 23, 2018

	REVISIONS	DATE	BY

DESIGNED A. MAAS
DRAWN D. MILES
CHECKED L. ROSCOE
APPROVED B. BUNKER

ONE INCH AT FULL SCALE. IF NOT, SCALE ACCORDINGLY

FILE NAME P51598102-P205
JOB No. 216-1598-102
DATE FEBRUARY 2018

Parametrix
ENGINEERING . PLANNING . ENVIRONMENTAL SCIENCES
1019 39TH AVENUE SE, SUITE 100 | PUYALLUP, WA 98374
P 253.604.6600
WWW.PARAMETRIX.COM

PROJECT NAME
THE CONSOLIDATED BOROUGH OF QUIL CEDA VILLAGE MBR TREATMENT FACILITY UPGRADE
TULALIP, WASHINGTON

P&ID MBR #1

DRAWING NO. 12 OF 157

P205

PATH: U:\PSO\Projects\Clients\1598-Tulalip Tribes\216-1598-102 MBR Upgrade\99Svcs\CADD\DWG PLOTTED BY: peterden DATE: Tuesday, February 20, 2018 11:57:47 AM LAYOUT: P205

NOTE:

1. NEW EQUIPMENT AND MATERIALS ARE SHOWN IN RED LINES. REFER TO CIVIL, STRUCTURAL, MECHANICAL, ELECTRICAL AND INSTRUMENTATION DRAWINGS FOR AN ACCURATE AND SCALED REPRESENTATION OF PIPING AND DETAILS INCLUDED IN THE PROJECT CONSTRUCTION.

PROJECT WORK SHOWN ON THIS DRAWING IS ALL INCLUDED IN SCHEDULE B

HMI

LOCAL CONTROL PANEL LCP-2014

FIELD PROCESS AND CONTROL

YC 2601

(3) (5) (2) (2)

FIT 2617 FE 2617

PT 2617 PE 2617

TURBIDITY METER X-2604

TURBIDITY METER X-2605

N P205 CLS HEADER FROM RESERVOIR

P P205 FROM LIT-2939

S P102 FROM PRE-AERATION TANK

OVERFLOW FROM MBR #2

M-2606

V-2606

LE 2608

SAMPLE/ DRAIN

10" PA

MBRI

MBR #3

B P202 AIR FROM BLOWERS

ZSO 2603 ZSC 2603

V-2603

3" 2" DRAIN

MEMBRANE BIOREACTOR #4 TANK

2" CLS

8" UPPER CARTRIDGE

8" LOWER CARTRIDGE

PERMEATE

COLLECTOR

VENT

DRAIN

V-2623 V-2624 V-2625 V-2626 V-2627 V-2628 V-2629 V-2630 V-2631 V-2632 V-2633 V-2634 V-2635 V-2636 V-2637 V-2638

SAMPLE

MBR 4J MBR 4A

MBR 4K MBR 4B

MBR 4L MBR 4C

MBR 4M MBR 4D

MBR 4N MBR 4E

MBR 4P MBR 4F

MBR 4Q MBR 4G

MBR 4R MBR 4H

V-2609 V-2610 V-2611 V-2612 V-2613 V-2614 V-2615 V-2616

SAMPLE

12" PA

TK-2600

OVERFLOW TO MBR #2 & #3

REC INFLUENT BOX

4" DRAIN

V-2622

12" REC

E P204 RECYCLE MIXED LIQUOR TO RECYCLE PUMPS #5 & #6

G P207 #4 MBR PERMEATE MAIN

MBRI

INFLUENT TO FUTURE MBR

PROCESS ONLY

ALLAN MAAS STATE OF WASHINGTON 27045 REGISTERED PROFESSIONAL ENGINEER

INSTRUMENTATION ONLY

ARTHUR G. STOKES STATE OF WASHINGTON 34736 REGISTERED PROFESSIONAL ENGINEER

FEBRUARY 23, 2018

	REVISIONS	DATE	BY

DESIGNED A. MAAS
DRAWN D. MILES
CHECKED L. ROSCOE
APPROVED B. BUNKER

ONE INCH AT FULL SCALE. IF NOT, SCALE ACCORDINGLY

FILE NAME PS1598102-P206
JOB No. 216-1598-102
DATE FEBRUARY 2018

Parametrix
ENGINEERING . PLANNING . ENVIRONMENTAL SCIENCES
1019 39TH AVENUE SE, SUITE 100 | PUYALLUP, WA 98374
P 253.604.6600
WWW.PARAMETRIX.COM

PROJECT NAME
THE CONSOLIDATED BOROUGH OF QUIL CEDA VILLAGE
MBR TREATMENT FACILITY UPGRADE
TULALIP, WASHINGTON

P&ID MBR #4

DRAWING NO. 13 OF 157

P206

PATH: U:\PSO\Projects\Clients\1598-TulalipTribes\216-1598-102 MBR Upgrade\99Svcs\CAD0\DWG PLOTTED BY: milesdor DATE: Wednesday, February 21, 2018 1:11:35 PM
LAYOUT: P206

HMI

LOCAL CONTROL PANEL LCP-2023

LOCAL CONTROL PANEL LCP-2014

FIELD PROCESS AND CONTROL

YC 2540 | YC 2440 | YC 2740 | YC 2640

(1) (7)

YL 2540A RNG | YL 2540B FLT | YL 2540C CPA | HS 2540 HOR | VFD 2540 | MCC-3A

YL 2440A RNG | YL 2440B FLT | YL 2440C CPA | HS 2440 HOR | VFD 2440 | MCC-3B

YL 2740A RNG | YL 2740B FLT | YL 2740C CPA | HS 2740 HOR | VFD 2740 | MCC-3A

YL 2640A RNG | YL 2640B FLT | YL 2640C CPA | HS 2640 HOR | VFD 2640 | MCC-3B

FOR THIS DRAWING, ONLY PROJECT WORK INSIDE THIS BOX IS INCLUDED IN SCHEDULE A

ALL PROJECT WORK OUTSIDE THE BOX NOTED FOR SCHEDULE A, SHALL BE SCHEDULE B

NOTES:

1. VALVE EQUIPMENT PROVIDED BY MBR MFR.
2. NEW EQUIPMENT AND MATERIALS ARE SHOWN IN RED LINES. REFER TO CIVIL, STRUCTURAL, MECHANICAL, ELECTRICAL AND INSTRUMENTATION DRAWINGS FOR AN ACCURATE AND SCALED REPRESENTATION OF PIPING AND DETAILS INCLUDED IN THE PROJECT CONSTRUCTION.
3. SPRING TO CLOSE WHEN POWER FAILS. ALL FOUR PERMANENT FLOW VALVES.

F P205 MBR #1

MBR #2

MBR #3

G P206 MBR #4

TSH 2540 (M) | PG 2540 | P-2540 MBR #1 PERMEATE PUMP

TSH 2440 (M) | PG 2440 | P-2440 MBR #2 PERMEATE PUMP

TSH 2740 (M) | PG 2740 | P-2740 MBR #3 PERMEATE PUMP

TSH 2640 (M) | PG 2640 | P-2640 MBR #4 PERMEATE PUMP

PERMEATE

HS 2540 | ZI 2540 | OLS 2540 | CLS 2540 | FCV-2540

HS 2440 | ZI 2440 | OLS 2440 | CLS 2440 | FCV-2440

OLS 2740 | CLS 2740 | HS 2740 | ZI 2740 | FCV-2740

HS 2640 | ZI 2640 | OLS 2640 | CLS 2640 | FCV-2640

V-2541 | V-2642 | V-2441 | V-2442

H P301 EFFLUENT BUILDING

J P301 EFFLUENT BUILDING

K P301 EFFLUENT BUILDING

L P301 EFFLUENT BUILDING

SEE MBR MFG SUBMITTAL MATERIAL FOR INFORMATION ON MBR MFG SUPPLIED PERMEATE FLOW CONTROL VALVES (1)

PROCESS ONLY

JEAN MAAS — STATE OF WASHINGTON — 27045 — REGISTERED PROFESSIONAL ENGINEER

INSTRUMENTATION ONLY

ARTHUR G. STOKES — STATE OF WASHINGTON — 34736 — REGISTERED PROFESSIONAL ENGINEER

FEBRUARY 23, 2018

	REVISIONS	DATE	BY

DESIGNED A. MAAS
DRAWN D. PETERSON
CHECKED L. ROSCOE
APPROVED B. BUNKER

ONE INCH AT FULL SCALE. IF NOT, SCALE ACCORDINGLY

FILE NAME P51599102-P207
JOB No. 216-1598-102
DATE FEBRUARY 2018

Parametrix
ENGINEERING . PLANNING . ENVIRONMENTAL SCIENCES
1019 39TH AVENUE SE, SUITE 100 | PUYALLUP, WA 98374
P 253.604.6600
WWW.PARAMETRIX.COM

PROJECT NAME
THE CONSOLIDATED BOROUGH OF QUIL CEDA VILLAGE
MBR TREATMENT FACILITY UPGRADE
TULALIP, WASHINGTON

P&ID PERMEATE PUMPS

DRAWING NO. 14 OF 157

P207

PATH: U:\PSO\Projects\Clients\1598-TulalipTribes\216-1598-102 MBR Upgrade\395vcs\CADD\DWG PLOTTED BY: peterden DATE: Tuesday, February 20, 2018 12:47:43 PM LAYOUT: P207

PROJECT WORK SHOWN ON THIS DRAWING IS ALL INCLUDED IN SCHEDULE A

NOTE:

1. NEW EQUIPMENT AND MATERIALS ARE SHOWN IN RED LINES. REFER TO CIVIL, STRUCTURAL, MECHANICAL, ELECTRICAL AND INSTRUMENTATION DRAWINGS FOR AN ACCURATE AND SCALED REPRESENTATION OF PIPING AND DETAILS INCLUDED IN THE PROJECT CONSTRUCTION.

CONTROL ROOM
MCP–001

YC 2601

LOCAL CONTROL PANEL (LCP–2000)

FIELD PROCESS AND CONTROL

LIT 3005

LE 3001

ME–3000 LEVEL CONTROL #1

K P207 PERMEATE FROM MBR #3

16" PERM

H P207 PERMEATE FROM MBR #1

J P207 PERMEATE FROM MBR #2

L P207 PERMEATE FROM MBR #4

LE 3051

ME–3050 LEVEL CONTROL #3

LE 3026

ME–3025 LEVEL CONTROL #2

LE 3076

ME–3075 LEVEL CONTROL #4

WEIR PLATE

WEIR PLATE

WEIR PLATE

WEIR PLATE

WEIR PLATE

TK–3100 INTERCEPTOR

HS 3177

LSO 3177

LSC 3177

E–STOP

HS 3177

M

M–3177

V–3177

V–3182

LE 3176

TK–3175 CLEARWELL #3

LE 3151

TK–3150 CLEARWELL #2

(FUTURE)

AIT 3152

AE 3152

DO

LE 3126

TK–3125 CLEARWELL #1

OVERFLOW PERM

OVERFLOW W3

MAKE UP WATER

V–3180

V–3179

PERMEATE TO EFFLUENT PUMPS

PERMEATE TO EFFLUENT PUMPS

PERMEATE TO EFFLUENT PUMPS

PERMEATE TO EFFLUENT PUMPS

V–3181

2" PERM

PERMEATE TO UV COOLING

V–3178

W3

PERMEATE TO RE–USE PUMPS

PROCESS ONLY

ALAN MAAS
STATE OF WASHINGTON
27045
REGISTERED PROFESSIONAL ENGINEER

INSTRUMENTATION ONLY

ARTHUR G. STOKES
STATE OF WASHINGTON
34736
REGISTERED PROFESSIONAL ENGINEER

FEBRUARY 23, 2018

	REVISIONS	DATE	BY

DESIGNED A. MAAS
DRAWN D. MILES
CHECKED L. ROSCOE
APPROVED B. BUNKER

ONE INCH AT FULL SCALE. IF NOT, SCALE ACCORDINGLY

FILE NAME PS1598102–P301
JOB No. 216–1598–102
DATE FEBRUARY 2018

Parametrix
ENGINEERING . PLANNING . ENVIRONMENTAL SCIENCES
1019 39TH AVENUE SE, SUITE 100 | PUYALLUP, WA 98374
P 253.604.6600
WWW.PARAMETRIX.COM

PROJECT NAME
THE CONSOLIDATED BOROUGH OF QUIL CEDA VILLAGE MBR TREATMENT FACILITY UPGRADE
TULALIP, WASHINGTON

P&ID
EFFLUENT LEVEL CONTROL

DRAWING NO. 15 OF 157

P301

PATH: U:\PSO\Projects\Clients\1598–TulalipTribes\216–1598–102 MBR Upgrade\99Svcs\CADD\DWG
PLOTTED BY: peterden DATE: Tuesday, February 20, 2018 12:36:44 PM
LAYOUT: P301

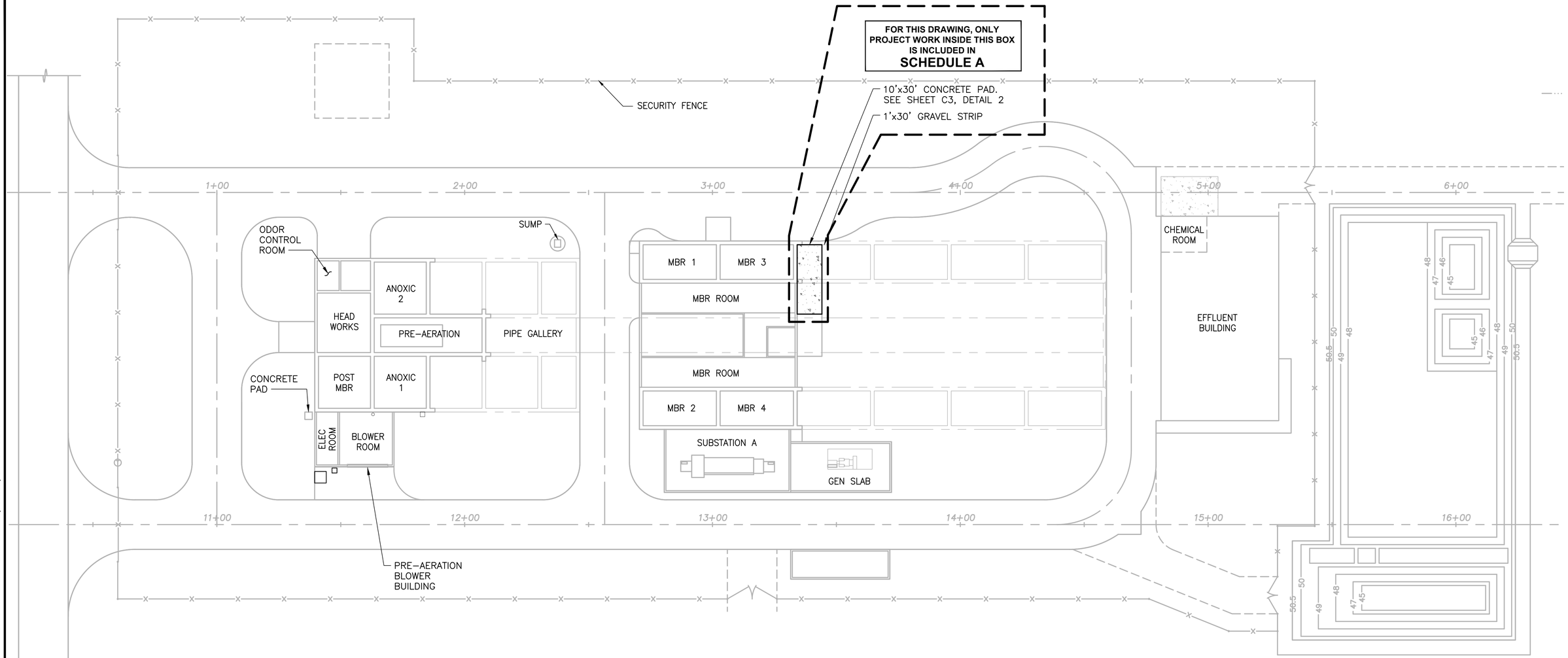

PLAN
SCALE: 1"= 20'-0"

NOTES:

1. NEW CONCRETE PAD SHALL MATCH EXISTING FLOOR AND PAVEMENT ELEVATIONS AT NORTH AND EAST EDGES AND HAVE 1% SLOPE DOWN TO SOUTH.
2. SEE STRUCTURAL, MECHANICAL, ELECTRICAL, AND INSTRUMENTATION DRAWINGS FOR DETAILED SCHEDULE A & B LIMITS.

	REVISIONS	DATE	BY

DESIGNED A. MAAS
DRAWN D. PETERSON
CHECKED L. ROSCOE
APPROVED B. BUNKER

ONE INCH AT FULL SCALE. IF NOT, SCALE ACCORDINGLY

FILE NAME PS1598102-C1
JOB No. 216-1598-102
DATE FEBRUARY 2018

ALLAN MAAS — STATE OF WASHINGTON — 27045 — REGISTERED PROFESSIONAL ENGINEER

FEBRUARY 23, 2018

Parametrix
ENGINEERING . PLANNING . ENVIRONMENTAL SCIENCES
1019 39TH AVENUE SE, SUITE 100 | PUYALLUP, WA 98374
P 253.604.6600
WWW.PARAMETRIX.COM

PROJECT NAME
THE CONSOLIDATED BOROUGH OF QUIL CEDA VILLAGE
MBR TREATMENT FACILITY UPGRADE
TULALIP, WASHINGTON

CIVIL SITE PLAN

DRAWING NO. 16 OF 157
C1

PATH: U:\PSO\Projects\Clients\1598-TulalipTribes\216-1598-102 MBR Upgrade\99Svcs\CADD\DWG PLOTTED BY: milesdar DATE: Wednesday, February 21, 2018 6:54:23 AM
LAYOUT: C1

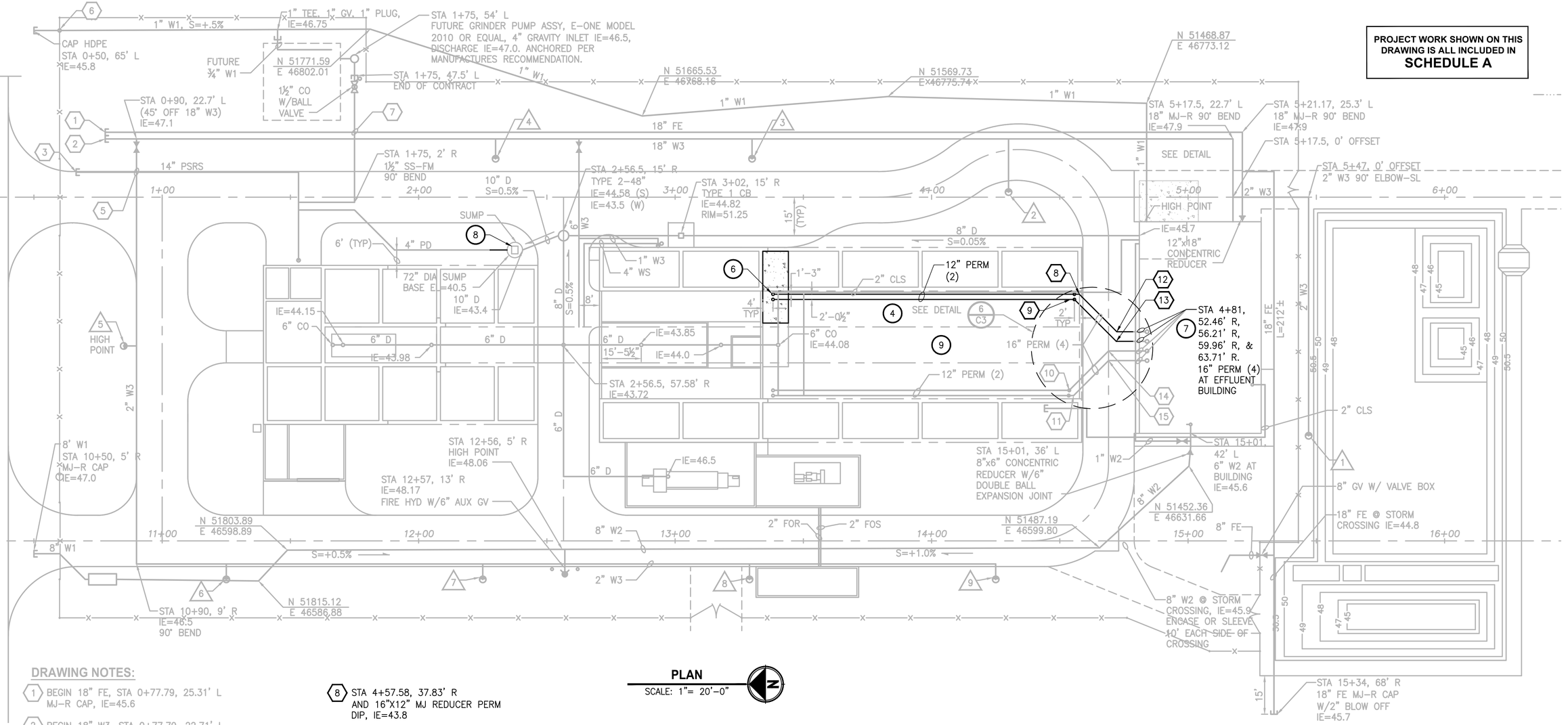

PLAN
SCALE: 1"= 20'-0"

DRAWING NOTES:

1. BEGIN 18" FE, STA 0+77.79, 25.31' L MJ-R CAP, IE=45.6
2. BEGIN 18" W3, STA 0+77.79, 22.71' L MJ-R CAP, IE=45.6
3. BEGIN 14" PSRS, STA 0+66.45, 9.75' L MJ-R CAP, IE=46.0
4. NOT USED
5. 2" W3 CROSSING AT 14" PSRS, (6" SEP MIN), SLEEVE 10' EACH SIDE OF CROSSING
6. INSTALL DOH APPROVED DDCVA, STA 0+60. INSTALLATION PER PNW-AWWA CROSS CONNECTION CONTROL MANUAL (LATEST EDITION)
7. 1½" SS FM ROUTED 1' MIN BELOW 18" FE AND 18" W3 FOR 10' MIN EACH SIDE OF CROSSING.
8. STA 4+57.58, 37.83' R AND 16"X12" MJ REDUCER PERM DIP, IE=43.8
9. STA 4+55.67, 39.88' R AND 16"X12" MJ REDUCER PERM DIP, IE=43.8
10. STA 14+53.67, 58.71' L 16" PERM DIP, IE=43.8
11. STA 14+55.38, 56.67' L 16" PERM DIP, IE=43.8
12. STA 4+71.7, 51.96' R 16" PERM DIP, MJ-R 45° BEND
13. STA 4+71.5, 55.71' R 16" PERM DIP, MJ-R 45° BEND
14. STA 4+69, 59.96' R 16" PERM DIP, MJ-R 45° BEND
15. STA 4+69, 63.71' R 16" PERM DIP, MJ-R 45° BEND

REUSE HYDRANTS:

HYDRANT NUMBERS 1 TO 9

PIPING LEGEND:

CLS	CHLORINE SOLUTION
D	GRAVITY PLANT DRAIN
FE	FINAL EFFLUENT TO INFILTRATION
FOR	FUEL OIL RETURN
FOS	FUEL OIL SUPPLY
PERM	PERMEATE
PD	PLANT DRAIN – FORCE MAIN
PSRS	PRE-SCREENED RAW SEWAGE
SS-FM	SANITARY SEWER – FORCE MAIN
W1	POTABLE WATER
W2	NON-POTABLE WATER
W3	NON-POTABLE (RECLAIMED) WATER
WS	WASTE SLUDGE

GENERAL CONSTRUCTION NOTES:

1. RESTRAINT REQUIRED AT ALL FITTINGS AND JOINTS FOR ALL ON-SITE PRESSURE PIPE UNLESS OTHERWISE NOTED.
2. ALL DIMENSIONS AND OFFSETS FOR SITE PIPING ARE L PIPE TO ℄ PIPE, OR ℄ PIPE FROM ℄ CONTROL UNLESS OTHERWISE NOTED.
3. STATION AND OFFSETS PROVIDED TO CENTER OF STRUCTURES.
4. PERMEATE "PIPE TRENCH" AND "TRENCH RESTORATION". SEE C3 DETAIL 4.
5. 12" TO 16" REDUCERS REQUIRED AT STATIONS 8 AND 9.
6. REMOVE/CUT SS PLUG ON PIPE BEFORE CONNECTING NEW PIPE, SEE M201.
7. CONNECT TO EXISTING PIPE 2'-0" NORTH OF BUILDING WALL AND APPROX. 7'-0" BELOW FLOOR ELEVATION WITH RESTRAINED COUPLINGS. POT-HOLING REQUIRED.
8. REPLACE 2 EXISTING DRAIN STATION PUMPS, PIPE, VALVES, ETC.
9. 12" AND 16" PERMEATE PIPE ON THE DRAWING IS ADDITIVE BID ITEM. SEE SPECIFICATIONS.
10. INSTALL 4 INCHES OF TOPSOIL OVER TRENCH AND DAMAGED AREAS. THEN HYDROSEED.

	REVISIONS	DATE	BY

DESIGNED A. MAAS
DRAWN D. PETERSON
CHECKED L. ROSCOE
APPROVED B. BUNKER

ONE INCH AT FULL SCALE. IF NOT, SCALE ACCORDINGLY
FILE NAME PS1598102-C2
JOB No. 216-1598-102
DATE FEBRUARY 2018

ALLAN MAAS
STATE OF WASHINGTON
27045
REGISTERED PROFESSIONAL ENGINEER
FEBRUARY 23, 2018

Parametrix
ENGINEERING . PLANNING . ENVIRONMENTAL SCIENCES
1019 39TH AVENUE SE, SUITE 100 | PUYALLUP, WA 98374
P 253.604.6600
WWW.PARAMETRIX.COM

PROJECT NAME
THE CONSOLIDATED BOROUGH OF QUIL CEDA VILLAGE
MBR TREATMENT FACILITY UPGRADE
TULALIP, WASHINGTON

SITE PIPING PLAN

DRAWING NO. 17 OF 157
C2

PATH: U:\PSO\Projects\Clients\1598-Tulalip Tribes\216-1598-102 MBR Upgrade\99Svcs\CADD\DWG
LAYOUT: C2
PLOTTED BY: milesdar DATE: Wednesday, February 21, 2018 5:00:53 PM

PROJECT WORK SHOWN ON THIS DRAWING IS ALL INCLUDED IN SCHEDULE A

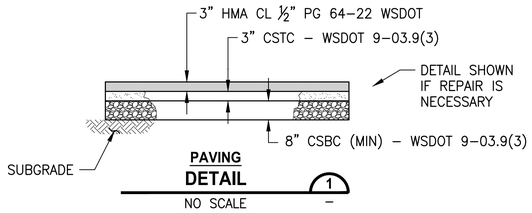

PAVING DETAIL 1
NO SCALE

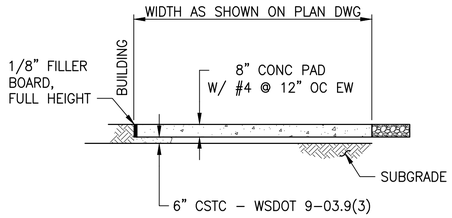

CONCRETE WALK DETAIL 2
NO SCALE

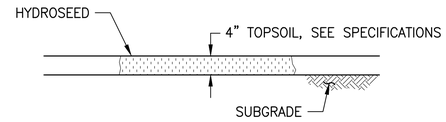

HYDROSEED DETAIL 3
NO SCALE

NOTES:

1. CS MATERIALS TO BE COMPACTED TO 95% OR MORE.

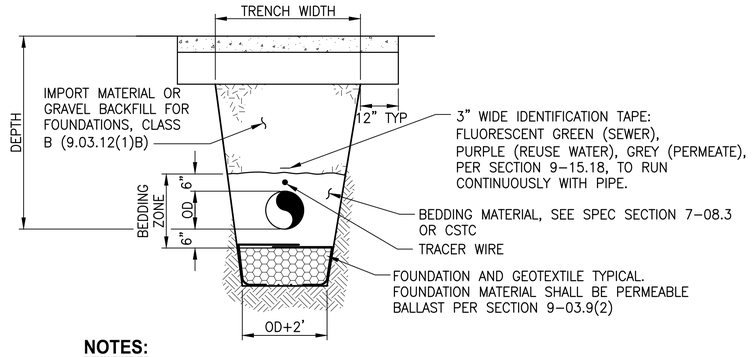

NOTES:

1. COMPACTION: BEDDING SHALL BE COMPACTED TO 95% MAX. AS DETERMINED BY ASTM D1557. BACKFILL SHALL BE COMPACTED TO 95%.
2. ALL MATERIALS, WORKMANSHIP, AND INSTALLATION SHALL BE IN CONFORMANCE WITH THE MOST CURRENT WSDOT/APWA STANDARD SPECIFICATIONS.

TYPICAL TRENCH DETAIL 4
NO SCALE

REVISIONS	DATE	BY

DESIGNED A. MAAS
DRAWN D. PETERSON
CHECKED L. ROSCOE
APPROVED B. BUNKER

ONE INCH AT FULL SCALE. IF NOT, SCALE ACCORDINGLY

FILE NAME PS1598102-C3
JOB No. 216-1598-102
DATE FEBRUARY 2018

ALLAN MAAS — STATE OF WASHINGTON — 27045 — REGISTERED PROFESSIONAL ENGINEER

FEBRUARY 23, 2018

Parametrix
ENGINEERING . PLANNING . ENVIRONMENTAL SCIENCES
1019 39TH AVENUE SE, SUITE 100 | PUYALLUP, WA 98374
P 253.604.6600
WWW.PARAMETRIX.COM

PROJECT NAME
THE CONSOLIDATED BOROUGH OF QUIL CEDA VILLAGE
MBR TREATMENT FACILITY UPGRADE
TULALIP, WASHINGTON

CIVIL DETAILS

DRAWING NO. 18 OF 157

C3

LAYOUT: C3 PATH: U:\PSO\Projects\Clients\1598-TulalipTribes\216-1598-102 MBR Upgrade\995vcs\CADD\DWG PLOTTED BY: milesdor DATE: Wednesday, February 21, 2018 7:01:13 AM

GENERAL STRUCTURAL NOTES:

DESIGN CRITERIA

APPLICABLE BUILDING CODES
2015 INTERNATIONAL BUILDING CODE, WASHINGTON STATE AMENDMENTS.

LOADS
ROOF LIVE OR SNOW LOAD . . . . . 30 psf
CONCRETE GROUND FLOOR . . . . . 100 psf

WIND LOADS
WIND SPEED (3 SECOND GUST) = 110 MPH, EXPOSURE = C

SEISMIC LOADS
TULALIP, WA
SITE CLASS D, Ie = 1.25
Sds = 1.15 x 1.04 x ⅔ = 0.80
Sd1 = 0.45 x 1.55 x ⅔ = 0.46

FOUNDATIONS

BASED ON "GEOTECHNICAL ENGINEERING REPORT TULALIP TRIBE WASTEWATER TREATMENT FACILITIES TULALIP, WA" BY AMEC EARTH & ENVIRONMENTAL, INC JANUARY 11, 2002.

SOIL BEARING PRESSURE .....2500 PSF
LATERAL PASSIVE BEARING PRESSURE.....300 PCF
SOIL ACTIVE PRESSURE, YIELDING WALLS.....35 PCF
SOIL FRICTION FACTOR, SLIDING.....0.40

INSPECTIONS

CONTRACTOR SHALL BE RESPONSIBLE FOR REQUESTING AND COORDINATING REQUIRED BUILDING DEPARTMENT INSPECTIONS. IN ADDITION, SPECIAL INSPECTIONS SHALL BE PERFORMED IN ACCORDANCE WITH THE TABLE ON THIS SHEET. THESE INSPECTIONS SHALL BE PERFORMED BY A CURRENTLY WABO CERTIFIED INSPECTOR UNDER THE SUPERVISION OF A REGISTERED PROFESSIONAL ENGINEER.

THE SPECIAL INSPECTOR SHALL OBSERVE THE WORK ASSIGNED FOR CONFORMANCE WITH THE APPROVED DESIGN DRAWINGS AND SPECIFICATIONS.

THE SPECIAL INSPECTOR SHALL FURNISH INSPECTION REPORTS TO THE BUILDING OFFICIAL, THE ENGINEER OF RECORD, AND OTHER DESIGNATED PERSONS. ALL DISCREPANCIES SHALL BE BROUGHT TO THE IMMEDIATE ATTENTION OF THE GENERAL CONTRACTOR FOR CORRECTION. THEN IF THEY ARE NOT CORRECTED, THE DISCREPANCIES SHALL BE REPORTED TO THE DESIGN PROFESSIONAL AND TO THE BUILDING OFFICIAL.

THE SPECIAL INSPECTOR SHALL SUBMIT A SEALED FINAL REPORT BY A REGISTERED PROFESSIONAL ENGINEER STATING WHETHER THE WORK REQUIRING SPECIAL INSPECTION WAS IN CONFORMANCE WITH THE APPROVED PLANS AND SPECIFICATIONS AND THE APPLICABLE WORKMANSHIP PROVISIONS OF THE IBC.

MISCELLANEOUS

REFER TO MECHANICAL AND ELECTRICAL DRAWINGS FOR SIZE AND LOCATION OF RECESSES, DUCT OPENINGS, PIPING, CONDUITS, EQUIPMENT LOCATION AND ANCHORAGES, ETC., NOT SHOWN.

SUBMIT ALL REQUIRED SHOP DRAWINGS AND RECEIVE THEIR SATISFACTORY REVIEW FROM THE OWNER'S REPRESENTATIVE, PRIOR TO FABRICATION.

COORDINATE AND VERIFY ALL DIMENSIONS WITH ARCHITECTURAL, MECHANICAL OR ELECTRICAL DRAWINGS AND VERIFY ALL DIMENSIONS AND CONDITIONS AT THE PROJECT SITE PRIOR TO STARTING WORK AND NOTIFY THE OWNER'S REPRESENTATIVE IMMEDIATELY OF ANY DISCREPANCIES.

REFER TO SPECIFICATIONS FOR INFORMATION NOT CONTAINED IN THESE GENERAL NOTES.

CONCRETE

ALL DETAILING, FABRICATION AND ERECTION OF REINFORCING BARS, SHALL BE IN ACCORDANCE WITH MANUAL OF STANDARD PRACTICE FOR DETAILING REINFORCED CONCRETE STRUCTURES ACI 315, LATEST EDITION.

CONCRETE CONSTRUCTION SHALL CONFORM TO ACI 318 BUILDING CODE, LATEST EDITION.

DESIGN STRENGTH
CAST-IN-PLACE CONCRETE, UNLESS OTHERWISE NOTED:
f'c = 4000psi AT 28 DAYS
REINFORCING STEEL SHALL BE IN ACCORDANCE WITH ASTM A615, GRADE 60. LAP SPLICES SHALL BE PER TABLE SHOWN ON THIS SHEET.

CONCRETE COVER
CONCRETE COVER FOR REINFORCING BARS SHALL BE AS FOLLOWS, BUT NOT LESS THAN ONE BAR DIAMETER:

FOOTINGS AND MATS FORMED AGAINST SOIL . . . . . 3"
CONCRETE IN CONTACT WITH SOIL, WEATHER OR WATER . . . . . 2"
CONCRETE NOT EXPOSED TO SOIL, WEATHER OR WATER . . . . . 1½"
BEAMS AND COLUMNS (TO STIRRUPS) . . . . . 1½"
SLAB ON GRADE
UNDER 6" THICK . . . . . AT SLAB CENTER
6" AND OVER . . . . . AS SHOWN

ANCHOR BOLTS

ANCHOR BOLTS FOR BUILDING STRUCTURE SHALL CONFORM TO ASTM A307 HOT DIPPED GALVANIZED. SET ALL BOLTS BY TEMPLATE

DRILLED-IN EXPANSION BOLTS

EXPANSION BOLTS SHALL BE STAINLESS STEEL "KWIK BOLTS" BY HILTI CORP., OR APPROVED EQUAL. ICBO CERTIFICATION AND SPECIAL INSPECTION IS REQUIRED. MINIMUM SPACING SHALL BE 12 BOLT DIAMETERS AND MINIMUM EDGE DISTANCE 6 BOLT DIAMETERS UNLESS NOTED OTHERWISE.

BOLT DIAMETER (IN.)	½	⅝	¾	⅞	1
MIN. EMBEDMENT IN STRUCTURAL CONCRETE (IN.)	4	4	5	6	7

ADHESIVE/EPOXY ANCHORING SYSTEM

ANCHORS SHALL BE STAINLESS STEEL RODS COMPLYING TO AISI 304. REINFORCING BARS AND RODS ANCHORED INTO EXISTING CONCRETE SHALL BE IN DRILLED HOLE WITH THREADED, CODE APPROVED, ADHESIVE ANCHORING MATERIALS. ICC-ES REPORTS ARE REQUIRED FOR USE IN CRACKED CONCRETE FOR WIND OR SEISMIC LOADING. MINIMUM EMBEDMENT IN STRUCTURAL CONCRETE SHALL BE 8 BAR DIAMETERS. MINIMUM EDGE DISTANCE 6 BAR DIAMETERS.

STEEL

MATERIAL
SHAPES AND PLATES SHALL CONFORM TO .....ASTM A992 (A572/50),
TUBES (HSS) SHALL CONFORM TO .....ASTM A500, GRADE B OR C,
PIPES SHALL CONFORM TO .....ASTM A53, GRADE B.
BOLTS SHALL CONFORM TO .....ASTM A325, BEARING TYPE N UNLESS NOTED.
TENSION LIMITED SLIP BOLTS BY DIRECT TENSION INDICATOR METHOD USING LOAD INDICATOR WASHERS INSTALLED PER MANUFACTURER'S INSTRUCTIONS OR BY TURN-OF-THE NUT METHOD.

MACHINE BOLTS SHALL BE ASTM A307 AND SHALL BE PROVIDED WITH LOCK NUT WASHERS UNDER NUTS OR SELF LOCKING NUTS.

WELDING
ALL WELDING SHALL CONFORM TO AWS D1.1 WELDING CODE. MINIMUM SIZE WELDS 3/16" CONTINUOUS FILLET.

ALL STEEL SHALL BE HOT DIP GALVANIZED AFTER FABRICATION UNLESS NOTED OTHERWISE.

STRUCTURAL ABBREVIATIONS

C	CHANNEL
L	ANGLE
HSS	HOLLOW STRUCTURAL SHAPE
SCH	SCHEDULE
W	WIDE FLANGE
S	S SHAPE
PL	PLATE
AB	ANCHOR BOLT
MB	MACHINE BOLT

SPECIAL INSPECTION SCHEDULE

ITEM	CI	PI	REMARKS/REFERENCES
GENERAL:			
PREFABRICATED ITEMS		X	
SITE PREPARATION, FILL PLACEMENT, SOIL COMPACTION		NA	BY GEOTECHNICAL ENGINEER OR AN APPROVED TESTING AGENCY
CONCRETE:			
REINFORCING MATERIALS		X	ASTM AS NOTED, ACI 318 7.1-7.4
REINFORCING PLACEMENT		X	ACI 318 7.5-7.8
WELDING - REINFORCING		X	AWS D1.4
ANCHOR RODS, EMBEDDED BOLTS & INSERTS	X		PRIOR TO AND DURING CONCRETE PLACEMENT
USE OF REQUIRED MIX DESIGN		X	
CONCRETE SLUMP, AIR CONTENT, TEMPERATURE & TEST SPECIMENS	X		WHILE MAKING SPECIMENS FOR STRENGTH TESTS, ACI 318 5.6
CONCRETE PLACEMENT	X		ACI 318 5.9, 5.10
CONCRETE CURING		X	ACI 318 5.11, 5.13
POST-INSTALLED ANCHORS			
GROUTED ANCHORS	X		
ADHESIVE ANCHORS	X		
MECHANICAL ANCHORS	X		

INSPECTION SCHEDULE NOTES

1. ITEMS MARKED WITH AN "X" REQUIRE INSPECTION BY A SPECIAL INSPECTOR APPROVED BY THE BUILDING OFFICIAL.
2. ITEMS MARKED "NA" ARE NOT APPLICABLE TO THIS PROJECT.
3. CI = CONTINUOUS INSPECTION DURING PROGRESS OF WORK BY SPECIAL INSPECTOR.
4. PI = PERIODIC INSPECTION BY SPECIAL INSPECTOR AS REQUIRED TO CONFIRM CONFORMANCE OF WORK.
5. TESTING AND INSPECTION REPORTS SHALL BE SUBMITTED TO THE ENGINEER, BUILDING OFFICIAL AND CONTRACTOR.

LAP SPLICE TABLE

BAR SIZE	CONCRETE f'c = 4,000 OR 5,000 PSI	MASONRY f'm = 1,500 PSI
#3	19"	16"
#4	25"	21"
#5	31"	26"
#6	37"	43"
#7	48"	60"
#8	55"	92"
#9	62"	NA
#10	69"	NA

MINIMUM LAP SPLICES UNLESS OTHERWISE DETAILED ON DRAWINGS

REVISIONS	DATE	BY

DESIGNED S. WAGNER
DRAWN D. PETERSON
CHECKED J. MERTH
APPROVED B. BUNKER

ONE INCH AT FULL SCALE. IF NOT, SCALE ACCORDINGLY
FILE NAME PS1598102-S1
JOB No. 216-1598-102
DATE FEBRUARY 2018

STEVEN A. WAGNER — STATE OF WASHINGTON — 18711 — STRUCTURAL ENGINEER — PROFESSIONAL ENGINEER
FEBRUARY 23, 2018

Parametrix
ENGINEERING . PLANNING . ENVIRONMENTAL SCIENCES
1019 39TH AVENUE SE, SUITE 100 | PUYALLUP, WA 98374
P 253.604.6600
WWW.PARAMETRIX.COM

PROJECT NAME
THE CONSOLIDATED BOROUGH OF QUIL CEDA VILLAGE
MBR TREATMENT FACILITY UPGRADE
TULALIP, WASHINGTON

STRUCTURAL NOTES

DRAWING NO. 19 OF 157
S1

LAYOUT: S1 PATH: U:\PSO\Projects\Clients\1598-TulalipTribes\216-1598-102 MBR Upgrade\99Svcs\CADD\DWG PLOTTED BY: peterden DATE: Thursday, February 22, 2018 10:25:39 AM

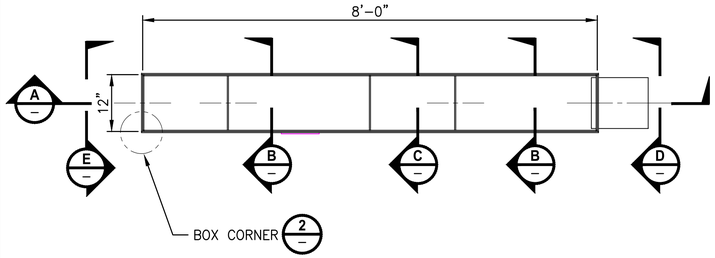

INFLUENT BOX
PLAN 1
SCALE: 3/4"=1'-0"

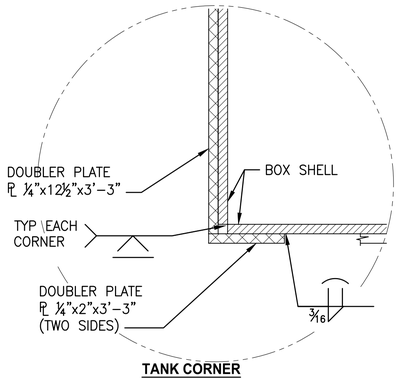

TANK CORNER
DETAIL 2
SCALE: 6"=1'-0"

NOTES:

1. CONTRACTOR SHALL VERIFY DIMENSIONS, AND LOCATIONS PRIOR TO CONSTRUCTION.
2. TANK, BAFFLES AND DOUBLER PLATES SHALL BE CONSTRUCTED FROM 6060-T6 ALUMINUM. BOX SHELL, BOTTOM AND BAFFLES SHALL BE ¼" PLATE THROUGHOUT.
3. ELEVATION OF BOX SUPPORTS SHALL BE DETERMINED IN THE FIELD.
4. EDPM GASKET MATERIAL FOR SEAL AGAINST WALL.

PROJECT WORK SHOWN ON THIS DRAWING IS ALL INCLUDED IN SCHEDULE B

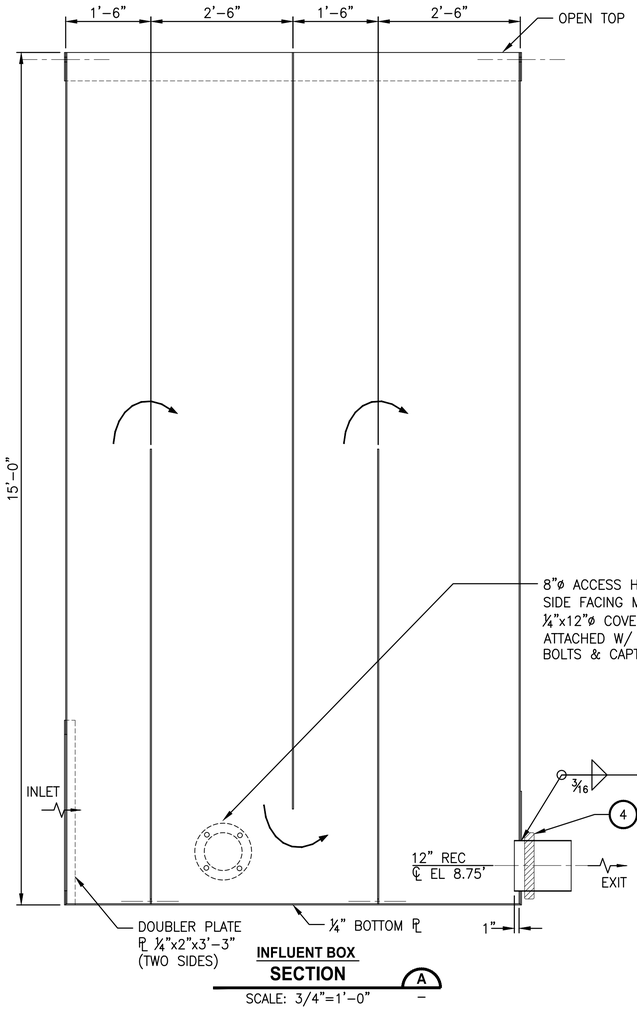

INFLUENT BOX
SECTION A
SCALE: 3/4"=1'-0"

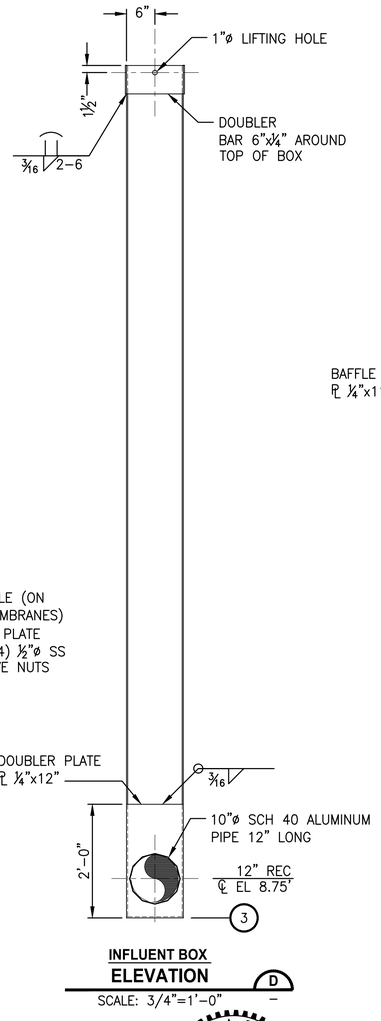

INFLUENT BOX
ELEVATION D
SCALE: 3/4"=1'-0"

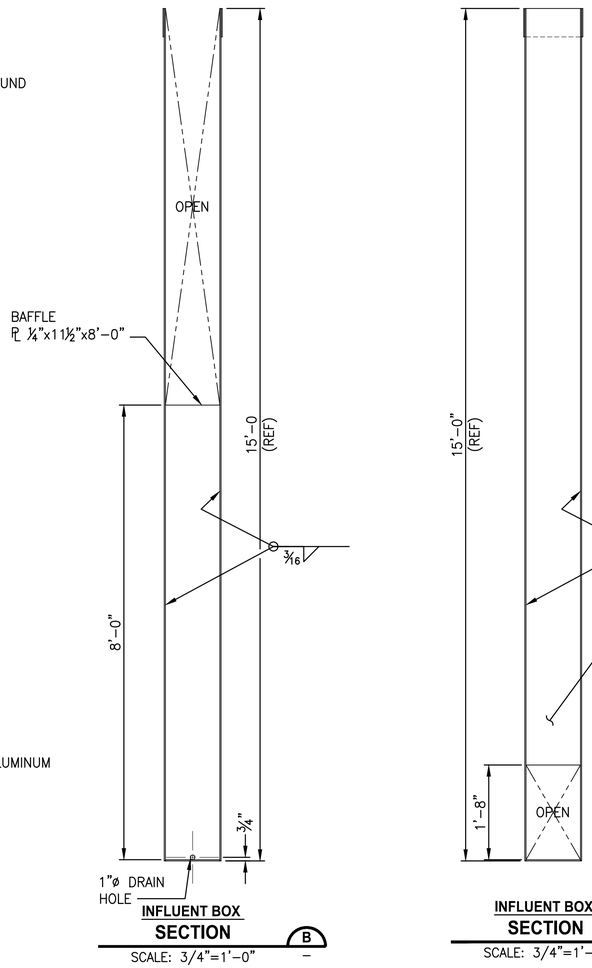

INFLUENT BOX
SECTION B
SCALE: 3/4"=1'-0"

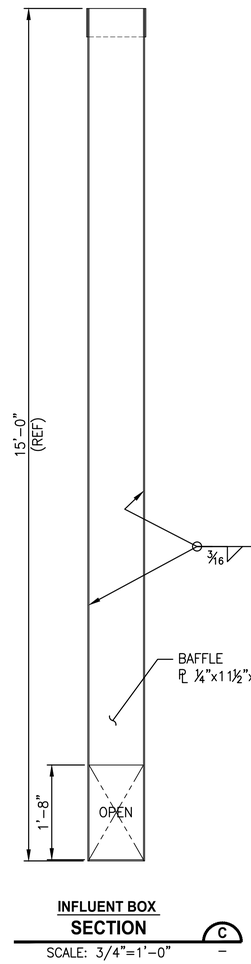

INFLUENT BOX
SECTION C
SCALE: 3/4"=1'-0"

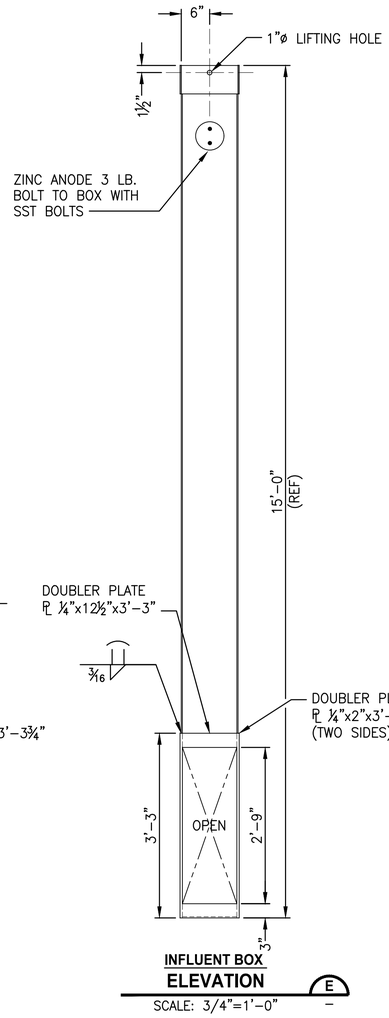

INFLUENT BOX
ELEVATION E
SCALE: 3/4"=1'-0"

	REVISIONS	DATE	BY

DESIGNED S. WAGNER
DRAWN C. WEST
CHECKED J. MERTH
APPROVED B. BUNKER

ONE INCH AT FULL SCALE. IF NOT, SCALE ACCORDINGLY
FILE NAME PS21615981O2-S10.DWG
JOB No. 2161598102
DATE FEBRUARY 2018

STEVEN A. WAGNER — STATE OF WASHINGTON — 16711 — STRUCTURAL ENGINEER — PROFESSIONAL ENGINEER
FEBRUARY 23, 2018

Parametrix
ENGINEERING . PLANNING . ENVIRONMENTAL SCIENCES
1019 39TH AVENUE SE, SUITE 100 | PUYALLUP, WA 98374
P 253.604.6600
WWW.PARAMETRIX.COM

PROJECT NAME
THE CONSOLIDATED BOROUGH OF QUIL CEDA VILLAGE MBR TREATMENT FACILITY UPGRADE
TULALIP, WASHINGTON

REC INFLUENT BOX AND STRUCTURAL DETAILS

DRAWING NO. 20 OF 157
S10

File: PS21615981O2-S10.dwg Plotted by: peterden Date: Thursday, February 22, 2018 10:18:39 AM

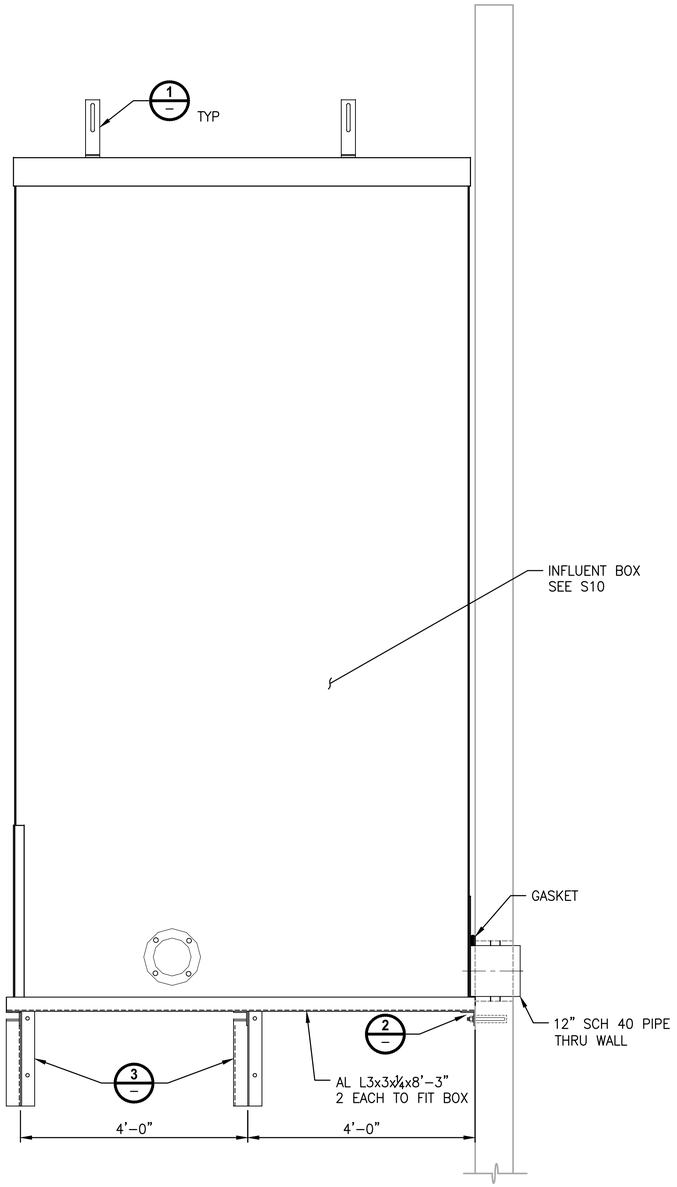

INFLUENT BOX STAND
FRONT ELEVATION A
SCALE: 3/4"=1'-0"

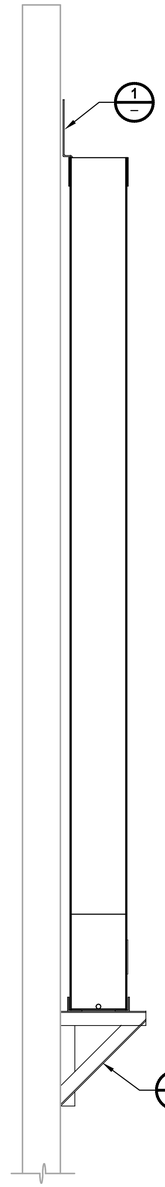

INFLUENT BOX STAND
SIDE ELEVATION B
SCALE: 3/4"=1'-0"

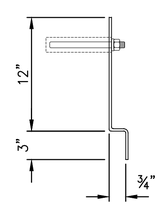

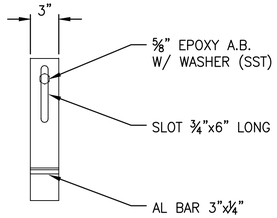

DETAIL 1
SCALE: 1-1/2"=1'-0"

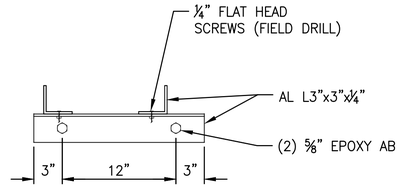

DETAIL 2
SCALE: 1-1/2"=1'-0"

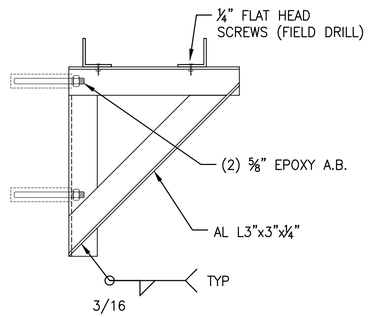

SIDE VIEW

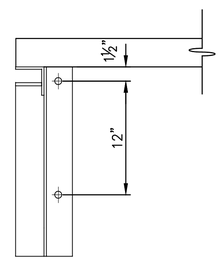

FRONT VIEW

DETAIL 3
SCALE: 1-1/2"=1'-0"

PROJECT WORK SHOWN ON THIS DRAWING IS ALL INCLUDED IN
SCHEDULE B

	REVISIONS	DATE	BY

DESIGNED S. WAGNER
DRAWN D. PETERSON
CHECKED J. MERTH
APPROVED B. BUNKER

ONE INCH AT FULL SCALE.
IF NOT, SCALE ACCORDINGLY
FILE NAME PS1598102-S11.DWG
JOB No. 2161598102
DATE FEBRUARY 2018

STEVEN A. WAGNER · STATE OF WASHINGTON · 18711 · STRUCTURAL ENGINEER · PROFESSIONAL ENGINEER
FEBRUARY 23, 2018

Parametrix
ENGINEERING . PLANNING . ENVIRONMENTAL SCIENCES
1019 39TH AVENUE SE, SUITE 100 | PUYALLUP, WA 98374
P 253.604.6600
WWW.PARAMETRIX.COM

PROJECT NAME
THE CONSOLIDATED BOROUGH OF QUIL CEDA VILLAGE
MBR TREATMENT FACILITY UPGRADE
TULALIP, WASHINGTON

REC INFLUENT BOX SUPPORT STAND AND STRUCTURAL DETAILS

DRAWING NO. 21 OF 157
S11

File: PS1598102-S11.dwg Plotted by: peterden Date: Thursday, February 22, 2018 10:20:10 AM

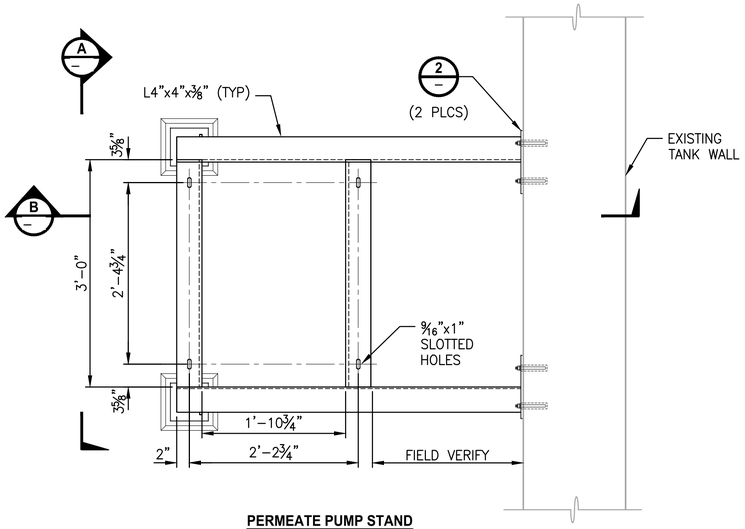

PERMEATE PUMP STAND
PLAN
SCALE: 1"=1'-0"

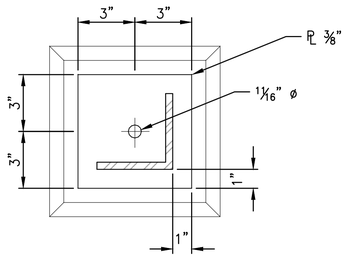

DETAIL 1
SCALE: 3"=1'-0"

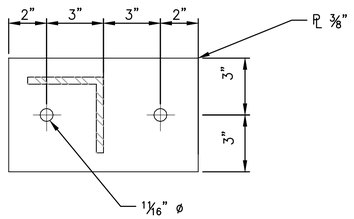

DETAIL 2
SCALE: 3"=1'-0"

NOTES:

1. MATERIAL: A36 STEEL HOT-DIP GALVANIZED AFTER FABRICATION.
2. WELD ALL JOINTS, ALL AROUND W/ 3/16" FILLET WELD OR FULL-PEN WELDS.
3. DIMENSIONS BASED ON PUMP SUPPLIER CUT SHEET. FIELD VERIFY.
4. 4 UNITS REQUIRED.

PROJECT WORK SHOWN ON THIS DRAWING IS ALL INCLUDED IN SCHEDULE B

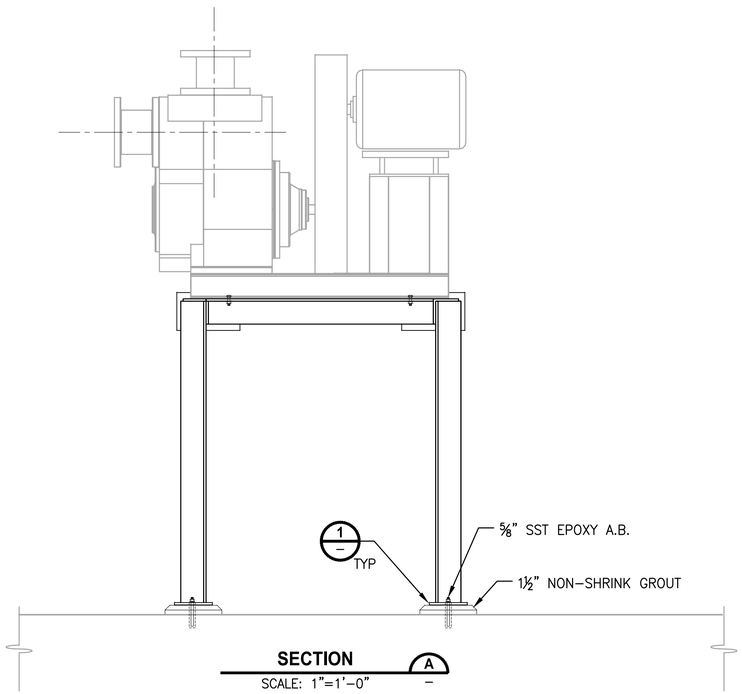

SECTION A
SCALE: 1"=1'-0"

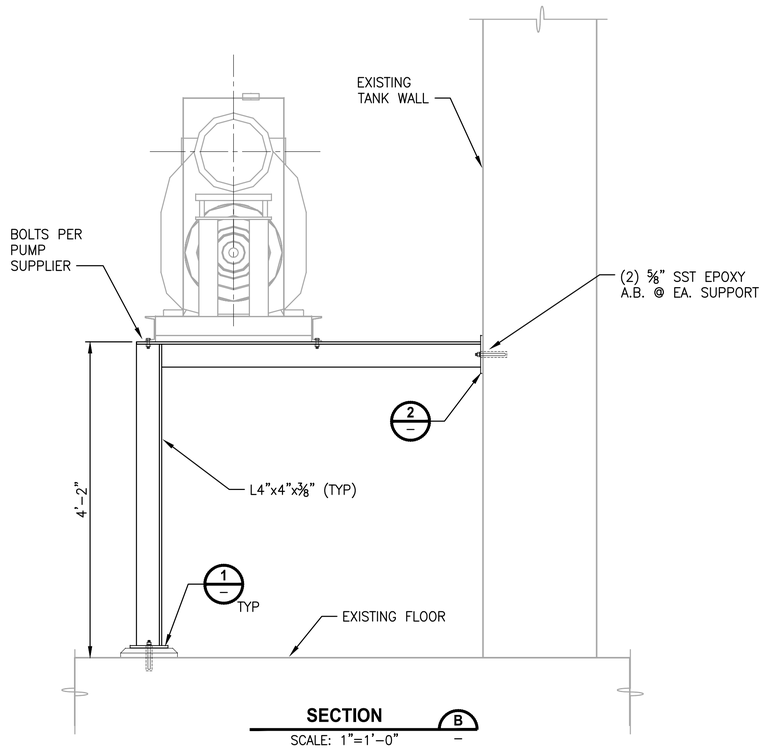

SECTION B
SCALE: 1"=1'-0"

	REVISIONS	DATE	BY

DESIGNED S. WAGNER
DRAWN D. PETERSON
CHECKED J. MERTH
APPROVED B. BUNKER

ONE INCH AT FULL SCALE. IF NOT, SCALE ACCORDINGLY
FILE NAME PS1598102-S12.DWG
JOB No. 2161598102
DATE FEBRUARY 2018

STEVEN A. WAGNER — STATE OF WASHINGTON — 18711 — STRUCTURAL ENGINEER — PROFESSIONAL ENGINEER
FEBRUARY 23, 2018

Parametrix
ENGINEERING . PLANNING . ENVIRONMENTAL SCIENCES
1019 39TH AVENUE SE, SUITE 100 | PUYALLUP, WA 98374
P 253.604.6600
WWW.PARAMETRIX.COM

PROJECT NAME
THE CONSOLIDATED BOROUGH OF QUIL CEDA VILLAGE
MBR TREATMENT FACILITY UPGRADE
TULALIP, WASHINGTON

PERMEATE PUMP SUPPORT AND STRUCTURAL DETAILS

DRAWING NO. 22 OF 157
S12

File: PS1598102-S12.dwg Plotted by: peterden Date: Thursday, February 22, 2018 10:21:09 AM

PROJECT WORK SHOWN ON THIS DRAWING IS ALL INCLUDED IN SCHEDULE B

NOTES:

1. FLOOR EL 0.0 = SITE EL 51.50.
2. GRATING FLOOR FROM GRID 8 TO 9 UPGRADED TO 5000# FORKLIFT CAPACITY WITH MODIFICATIONS AS SHOWN.
3. CUT EXISTING ALUMINUM GRATING PANELS AT CENTER OF NEW BEAM.

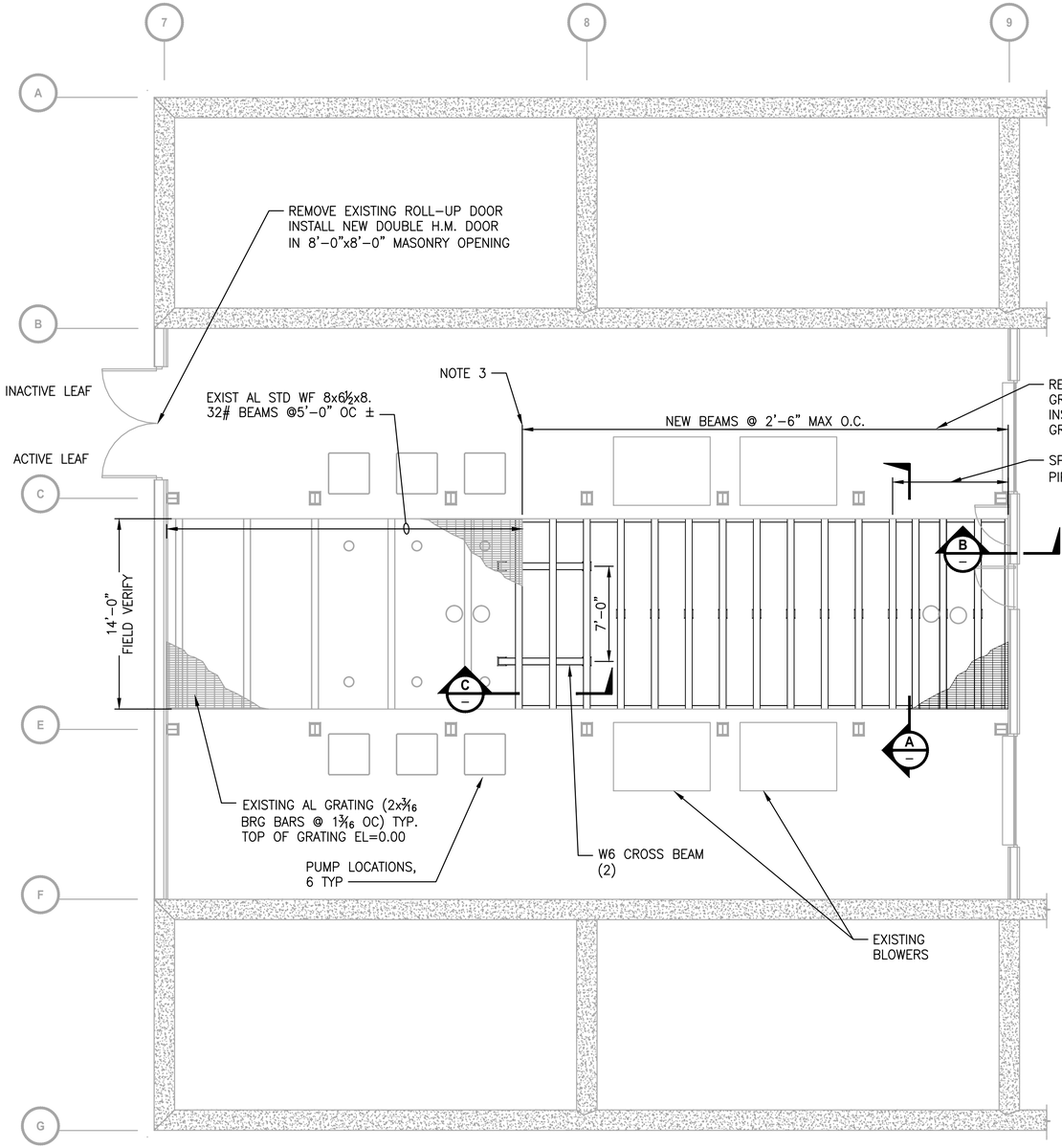

PLAN N
3/16"=1'-0"

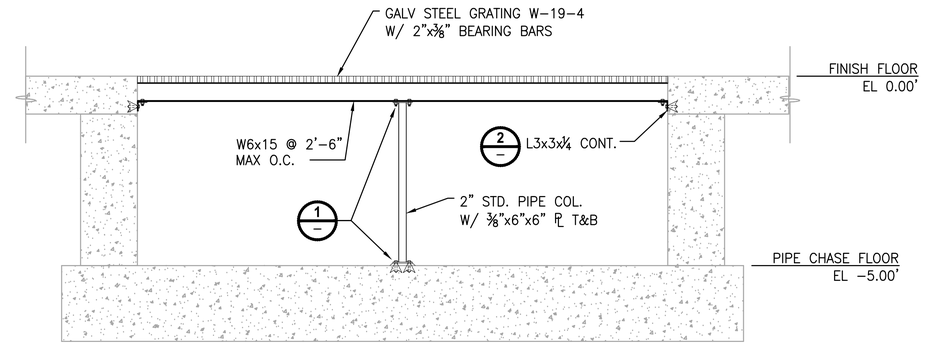

SECTION A
1/2"=1'-0"

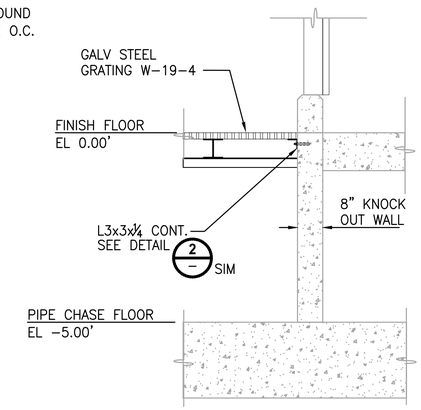

SECTION B
1/2"=1'-0"

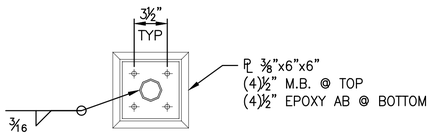

DETAIL 1
1 1/2"=1'-0"

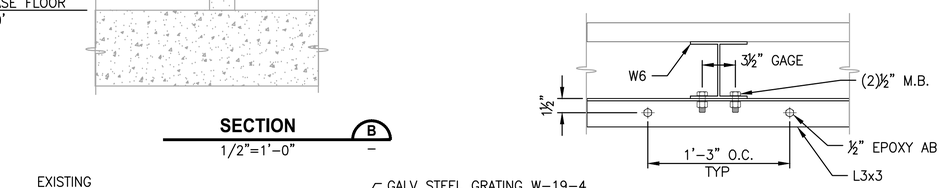

DETAIL 2
1 1/2"=1'-0"

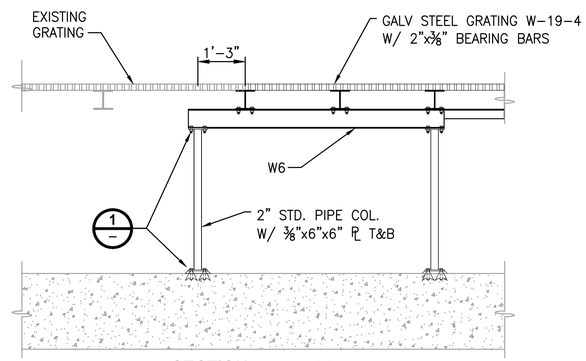

SECTION C
1/2"=1'-0"

	REVISIONS	DATE	BY

DESIGNED S. WAGNER
DRAWN D. PETERSON
CHECKED J. MERTH
APPROVED B. BUNKER

ONE INCH AT FULL SCALE. IF NOT, SCALE ACCORDINGLY
FILE NAME PS1598102-S201.DWG
JOB No. 2161598102
DATE FEBRUARY 2018

STEVEN A. WAGNER — STATE OF WASHINGTON — 18711 — STRUCTURAL ENGINEER — PROFESSIONAL ENGINEER
FEBRUARY 23, 2018

Parametrix
ENGINEERING . PLANNING . ENVIRONMENTAL SCIENCES
1019 39TH AVENUE SE, SUITE 100 | PUYALLUP, WA 98374
P 253.604.6600
WWW.PARAMETRIX.COM

PROJECT NAME
THE CONSOLIDATED BOROUGH OF QUIL CEDA VILLAGE MBR TREATMENT FACILITY UPGRADE
TULALIP, WASHINGTON

MBR BUILDING FLOOR PLAN

DRAWING NO. 23 OF 157
S201

File: PS1598102-S201.dwg Plotted by: peterden Date: Thursday, February 22, 2018 10:22:13 AM

NOTES:

1. MONORAIL DESIGNED FOR 2–TON LOAD CAPACITY.
2. MONORAIL BEAM TO SUPPORT CONNECTION TO BE 2–TON MIN. CAPACITY BOLTED BEAM CLAMP BY LINDAPTER OR APPROVED EQUAL.
3. S10 MONORAIL TO BE FABRICATED IN LONGEST LENGTHS POSSIBLE. FIELD WELD JOINTS WITH FULL PENETRATION WELDS. GRIND SMOOTH AT BOTTOM FLANGES.

PROJECT WORK SHOWN ON THIS DRAWING IS ALL INCLUDED IN SCHEDULE A

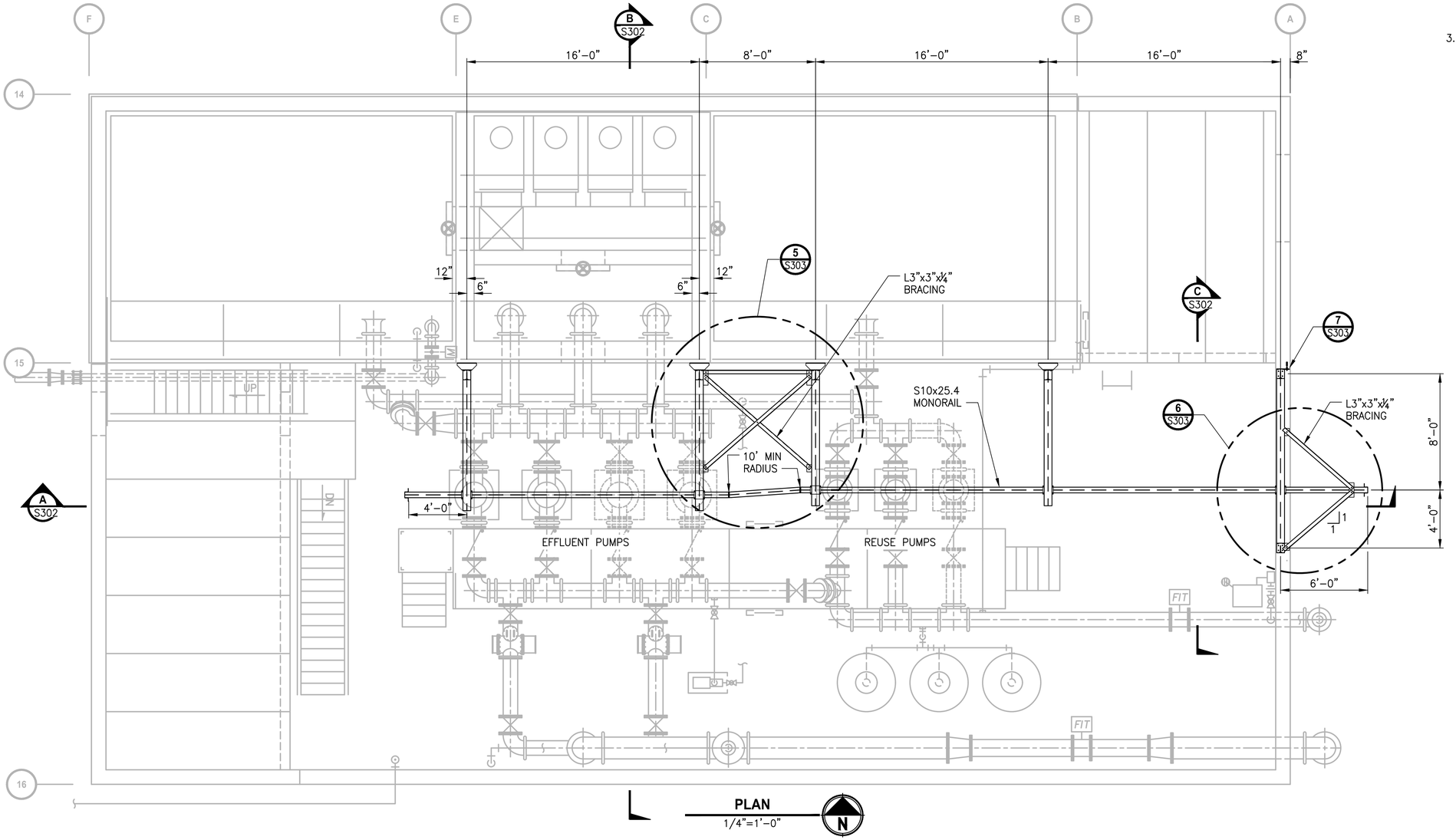

PLAN
1/4"=1'–0"

N

	REVISIONS	DATE	BY

DESIGNED S. WAGNER
DRAWN D. PETERSON
CHECKED J. MERTH
APPROVED B. BUNKER

ONE INCH AT FULL SCALE. IF NOT, SCALE ACCORDINGLY

FILE NAME PS1598102–S301
JOB No. 216–1598–102
DATE FEBRUARY 2018

STEVEN A. WAGNER — STATE OF WASHINGTON — 16711 — STRUCTURAL ENGINEER — PROFESSIONAL ENGINEER

FEBRUARY 23, 2018

Parametrix
ENGINEERING . PLANNING . ENVIRONMENTAL SCIENCES
1019 39TH AVENUE SE, SUITE 100 | PUYALLUP, WA 98374
P 253.604.6600
WWW.PARAMETRIX.COM

PROJECT NAME
THE CONSOLIDATED BOROUGH OF QUIL CEDA VILLAGE
MBR TREATMENT FACILITY UPGRADE
TULALIP, WASHINGTON

EFFLUENT PUMP MONORAIL HOIST

DRAWING NO. 24 OF 157
S301

PATH: U:\PSO\Projects\Clients\1598–TulalipTribes\216–1598–102 MBR Upgrade\99Svcs\CADD\DWG PLOTTED BY: peterden DATE: Thursday, February 22, 2018 10:27:07 AM
LAYOUT: S301

NOTES:

1. CONNECTIONS NOT DETAILED SHALL BE SHOP WELDED W/ 3/16" MIN FILLET WELDS, ALL AROUND.

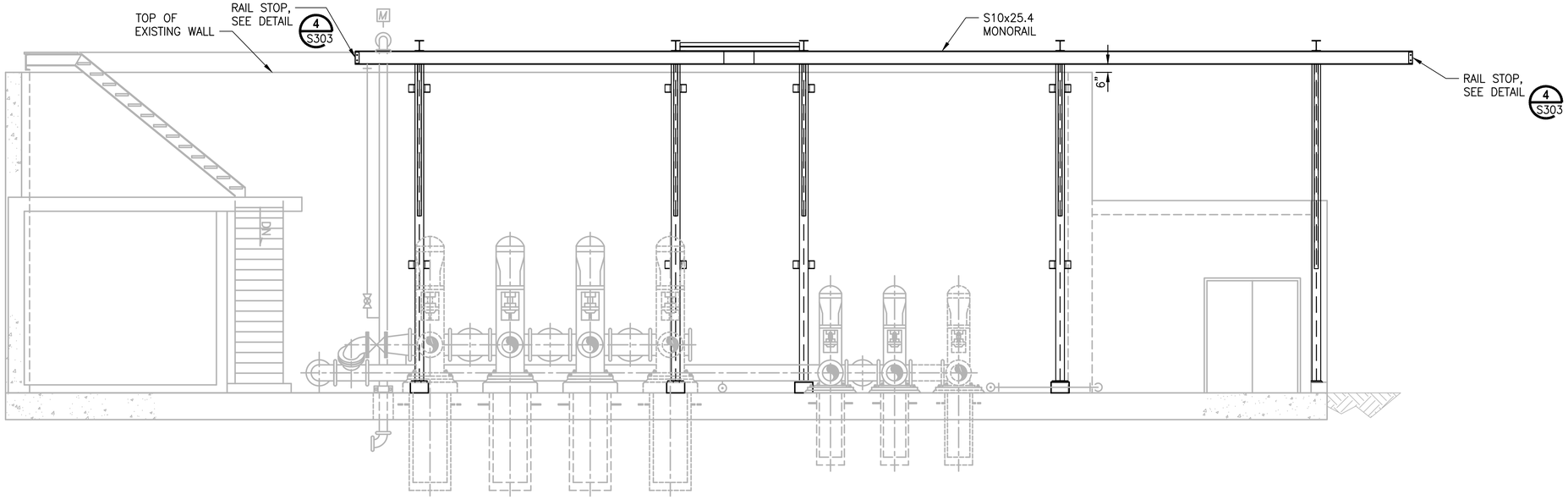

SECTION A S301
1/4"=1'-0"

PROJECT WORK SHOWN ON THIS DRAWING IS ALL INCLUDED IN **SCHEDULE A**

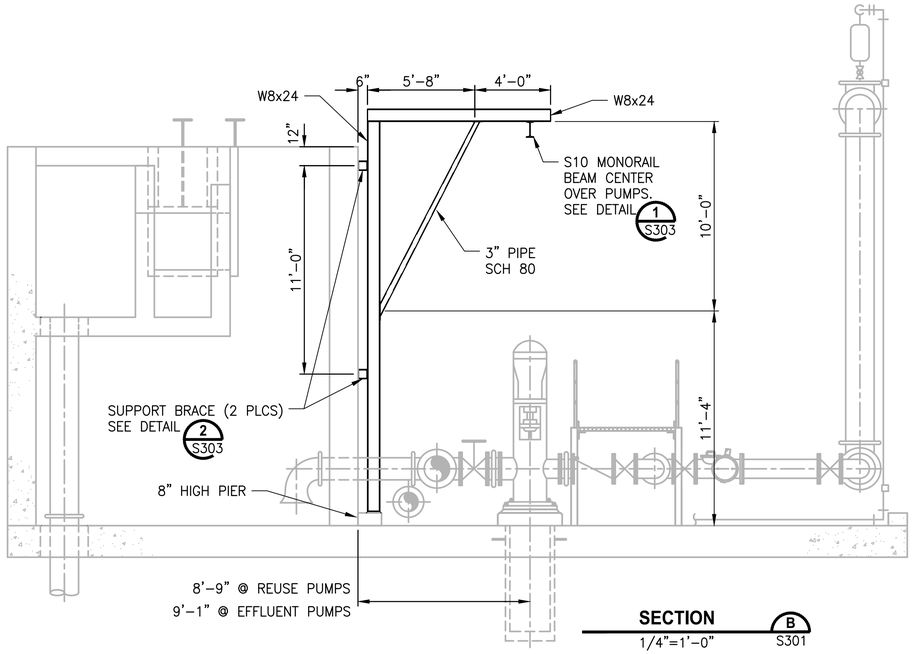

SECTION B S301
1/4"=1'-0"

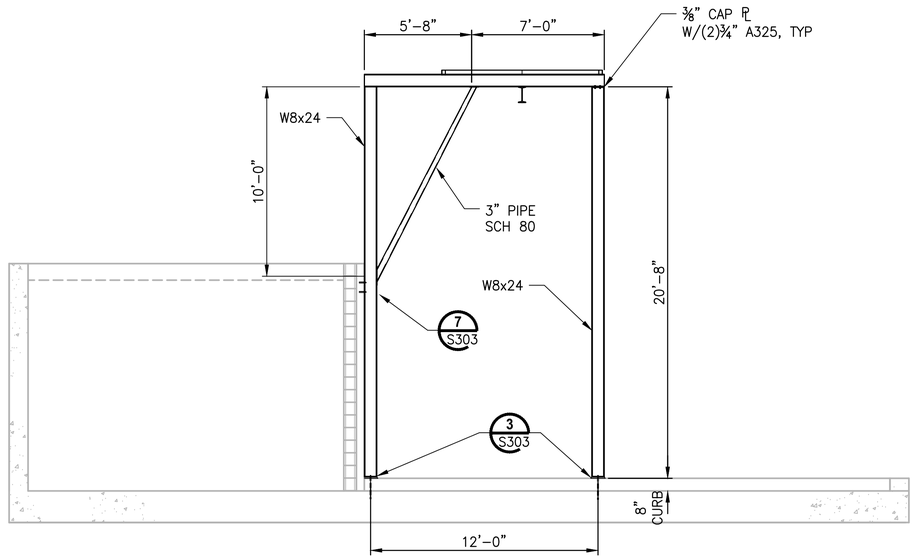

SECTION C S301
1/4"=1'-0"

REVISIONS	DATE	BY

DESIGNED S. WAGNER
DRAWN D. PETERSON
CHECKED J. MERTH
APPROVED B. BUNKER

ONE INCH AT FULL SCALE. IF NOT, SCALE ACCORDINGLY
FILE NAME PS1598102-S302
JOB No. 216-1598-102
DATE FEBRUARY 2018

STEVEN A. WAGNER, STATE OF WASHINGTON, 18711, STRUCTURAL ENGINEER, PROFESSIONAL ENGINEER
FEBRUARY 23, 2018

Parametrix
ENGINEERING . PLANNING . ENVIRONMENTAL SCIENCES
1019 39TH AVENUE SE, SUITE 100 | PUYALLUP, WA 98374
P 253.604.6600
WWW.PARAMETRIX.COM

PROJECT NAME
THE CONSOLIDATED BOROUGH OF QUIL CEDA VILLAGE
MBR TREATMENT FACILITY UPGRADE
TULALIP, WASHINGTON

EFFLUENT BUILDING SECTIONS

DRAWING NO. 25 OF 157
S302

LAYOUT: S302 PATH: U:\PSO\Projects\Clients\1598-TulalipTribes\216-1598-102 MBR Upgrade\99Svcs\CADD\DWG PLOTTED BY: peterden DATE: Thursday, February 22, 2018 10:28:45 AM

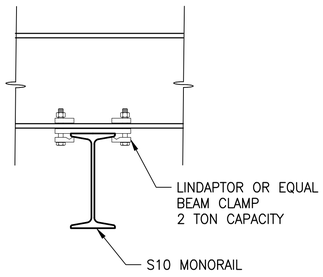

CRANE BEAM DETAIL 1 — 1 1/2"=1'-0" — S302

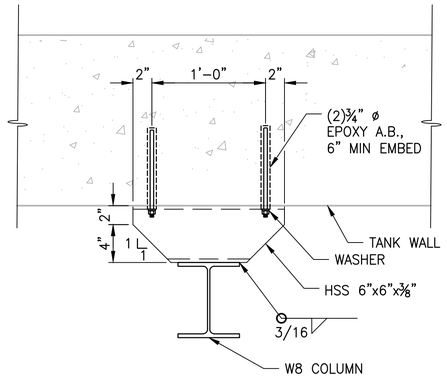

DETAIL 2 — 1 1/2"=1'-0" — S302

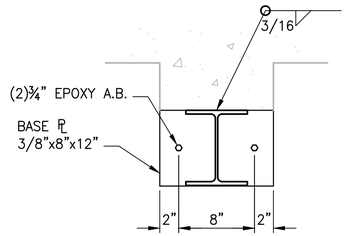

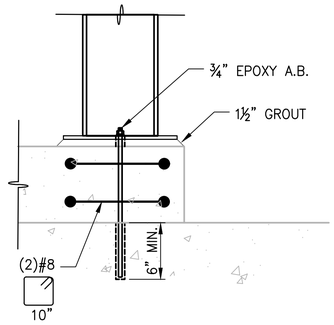

BASE PLATE DETAIL 3 — 1 1/2"=1'-0" — S302

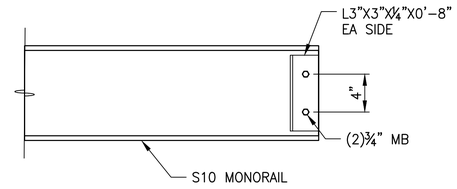

RAIL STOP DETAIL 4 — 1 1/2"=1'-0" — S302

PROJECT WORK SHOWN ON THIS DRAWING IS ALL INCLUDED IN SCHEDULE A

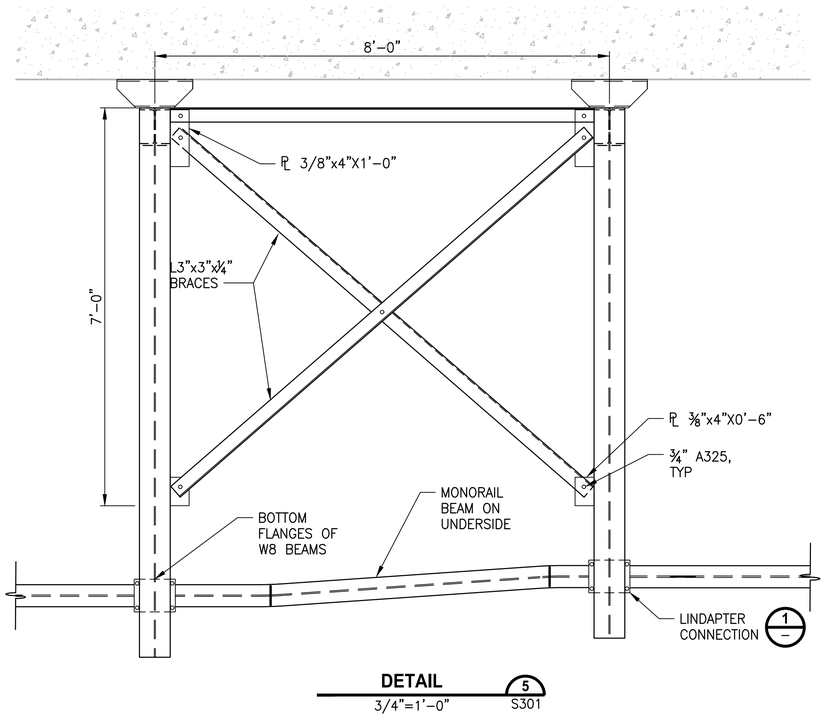

DETAIL 5 — 3/4"=1'-0" — S301

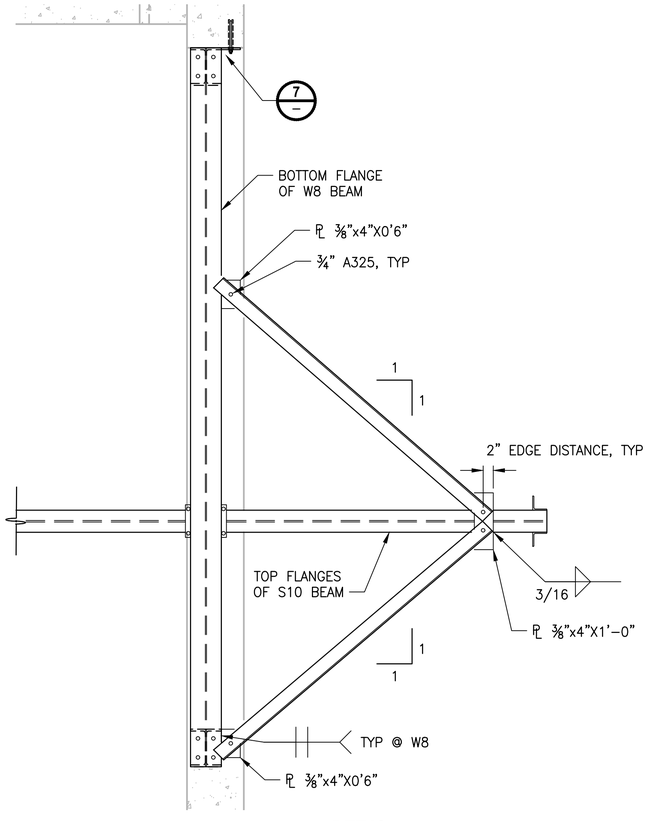

DETAIL 6 — 3/4"=1'-0" — S301

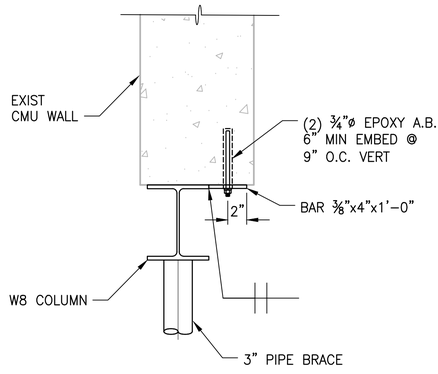

DETAIL 7 — 1 1/2"=1'-0" — S301, S302

REVISIONS	DATE	BY

DESIGNED S. WAGNER
DRAWN D. PETERSON
CHECKED J. MERTH
APPROVED B. BUNKER

ONE INCH AT FULL SCALE. IF NOT, SCALE ACCORDINGLY
FILE NAME PS1598102-S303
JOB No. 216-1598-102
DATE FEBRUARY 2018

STEVEN A. WAGNER — STATE OF WASHINGTON — 16711 — STRUCTURAL ENGINEER — PROFESSIONAL ENGINEER
FEBRUARY 23, 2018

Parametrix
ENGINEERING . PLANNING . ENVIRONMENTAL SCIENCES
1019 39TH AVENUE SE, SUITE 100 | PUYALLUP, WA 98374
P 253.604.6600
WWW.PARAMETRIX.COM

PROJECT NAME
THE CONSOLIDATED BOROUGH OF QUIL CEDA VILLAGE MBR TREATMENT FACILITY UPGRADE
TULALIP, WASHINGTON

EFFLUENT BUILDING DETAILS

DRAWING NO. 26 OF 157
S303

LAYOUT: S303 PATH: U:\PSO\Projects\Clients\1598--TulalipTribes\216-1598-102 MBR Upgrade\99Svcs\CADD\DWG PLOTTED BY: peterden DATE: Thursday, February 22, 2018 10:30:40 AM

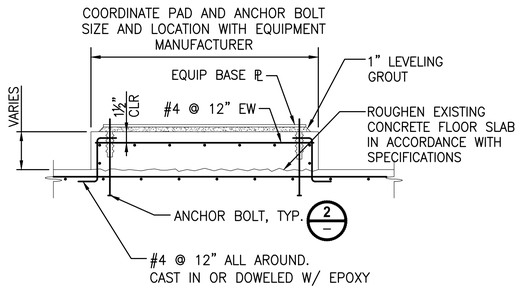

MECHANICAL/ELECTRICAL EQUIPMENT PAD
DETAIL 1
NO SCALE

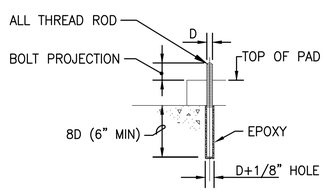

ANCHOR BOLT
EPOXY
DETAIL 2
NO SCALE

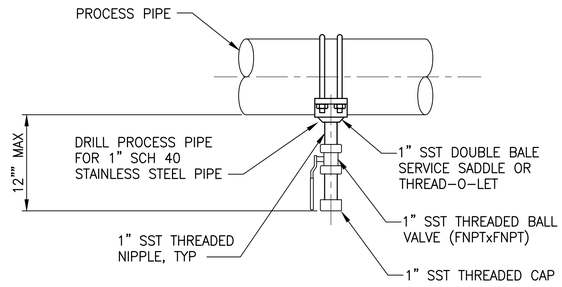

1. USE ANTI–SEIZE ON ALL THREADED JOINTS.

PIPE DRAIN
DETAIL 3
NO SCALE

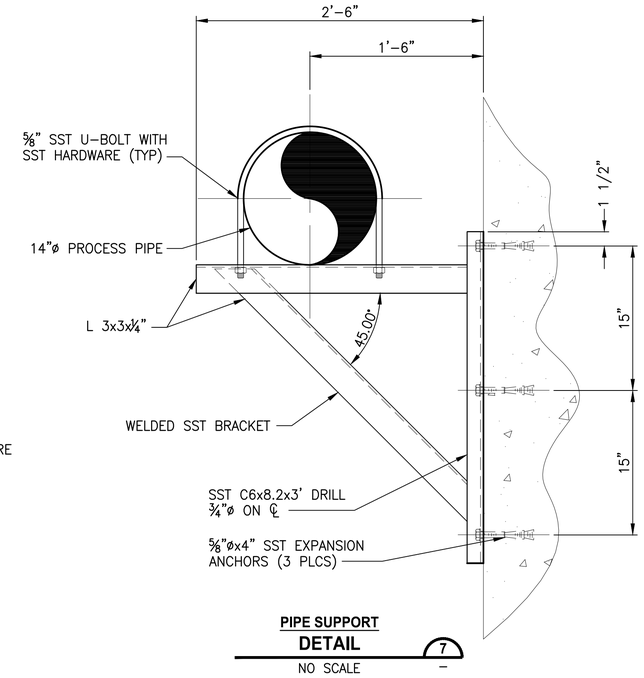

PIPE SUPPORT
DETAIL 7
NO SCALE

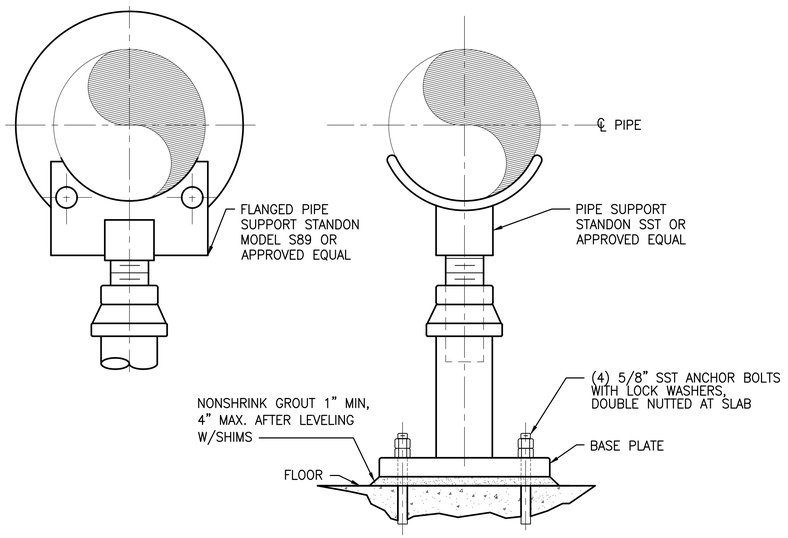

PIPE SUPPORT
DETAIL 4
NO SCALE

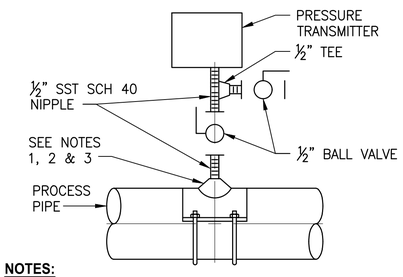

NOTES:

1. FOR STEEL, GALVANIZED STEEL, AND PVC 2 ½" AND SMALLER USE A BUSHING IN A TEE.
2. FOR DUCTILE IRON 4" AND LARGER USE PIPE SADDLE WITH BUSHING OR TAP PIPE. PROVIDE 3 THREADS MINIMUM PER ANSI/ASME B1.20.1.
3. FOR STEEL AND STAINLESS STEEL PIPES 3" AND LARGER, AND PRESSURE VESSELS, USE THREAD–O–LET WITH A DIELECTRIC ISOLATION BUSHING.
4. ALL BUSHINGS IN STEEL, GALVANIZED, AND SST SHALL BE DIELECTRIC ISOLATION BUSHINGS.
5. INCLUDE DIAPHRAGM SEAL FOR LIQUID PIPES.

PRESSURE TRANSMITTER
DETAIL 5
NO SCALE

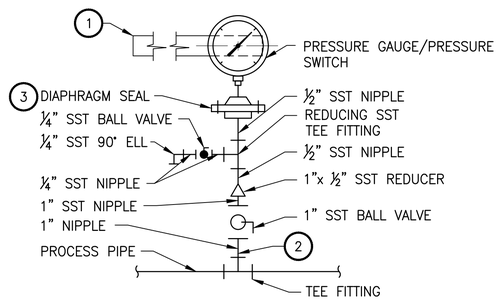

NOTES:

1. SST INSTRUMENT BRACE (FB ⅛"x LENGTH AS REQD), BOLT TO BACKSIDE OF INSTRUMENT CASE AND ATTACH ADJOINING END TO SUPPORT STRUCTURE OR PIPING WITH SST CLAMPS & MOUNTING HARDWARE.
2. FOR PVC PIPE GREATER THAN 3", PROVIDE AN ADDITIONAL REDUCER FITTING AND NIPPLES AS REQD.
3. PROVIDE DIAPHRAM SEAL AT LIQUID PIPE AND THE LOCATIONS SHOWN ON THE P&ID DRAWINGS.

LIQUID PIPE
PRESSURE GAUGE/SWITCH TYPICAL MOUNTING
DETAIL 6
NO SCALE TYP

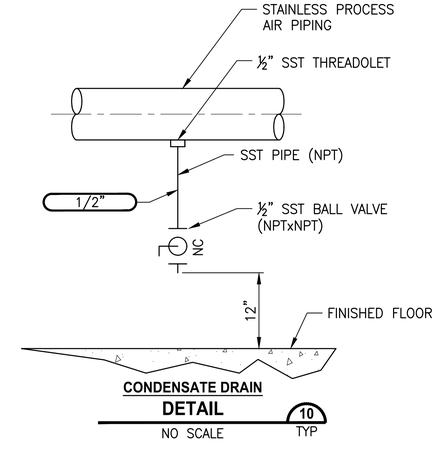

CONDENSATE DRAIN
DETAIL 10
NO SCALE TYP

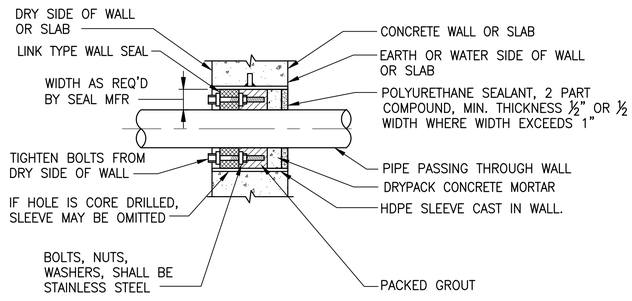

PIPE PENETRATION
DETAIL 8
NO SCALE

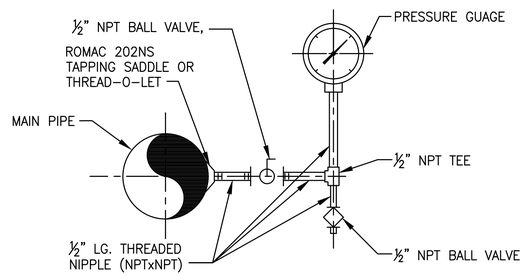

NOTES:

1. ALL COMPONENTS TO BE 316 STAINLESS STEEL. PIPING SCH 40.

AIR PIPE PRESSURE GAUGE
DETAIL 9
NO SCALE

	REVISIONS	DATE	BY

DESIGNED A. MAAS
DRAWN D. PETERSON
CHECKED L. ROSCOE
APPROVED B. BUNKER

ONE INCH AT FULL SCALE. IF NOT, SCALE ACCORDINGLY
FILE NAME PS1598102–M1
JOB No. 216–1598–102
DATE FEBRUARY 2018

ALLAN MAAS · STATE OF WASHINGTON · 27045 · REGISTERED PROFESSIONAL ENGINEER
FEBRUARY 23, 2018

Parametrix
ENGINEERING . PLANNING . ENVIRONMENTAL SCIENCES
1019 39TH AVENUE SE, SUITE 100 | PUYALLUP, WA 98374
P 253.604.6600
WWW.PARAMETRIX.COM

PROJECT NAME
THE CONSOLIDATED BOROUGH OF QUIL CEDA VILLAGE
MBR TREATMENT FACILITY UPGRADE
TULALIP, WASHINGTON

MECHANICAL DETAILS

DRAWING NO. 27 OF 157
M1

PATH: U:\PSO\Projects\Clients\1598–Tulalip Tribes\216–1598–102 MBR Upgrade\99Svcs\CADD\DWG
LAYOUT: M1 PLOTTED BY: milesdor DATE: Tuesday, February 20, 2018 4:38:32 PM

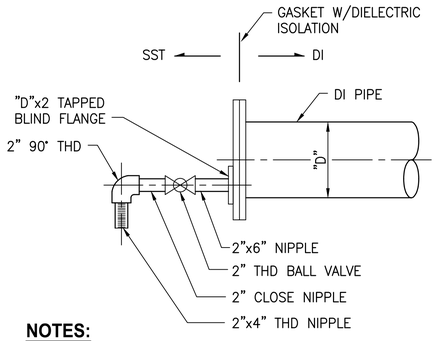

NOTES:

1. ALL MATERIAL TO BE 304 SST. EXCEPT AS INDICATED.

DRAIN DETAIL 2 / M202
NO SCALE

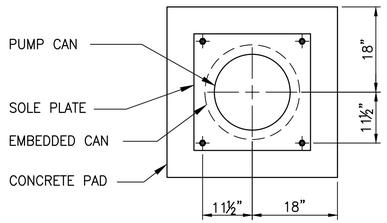

PLAN

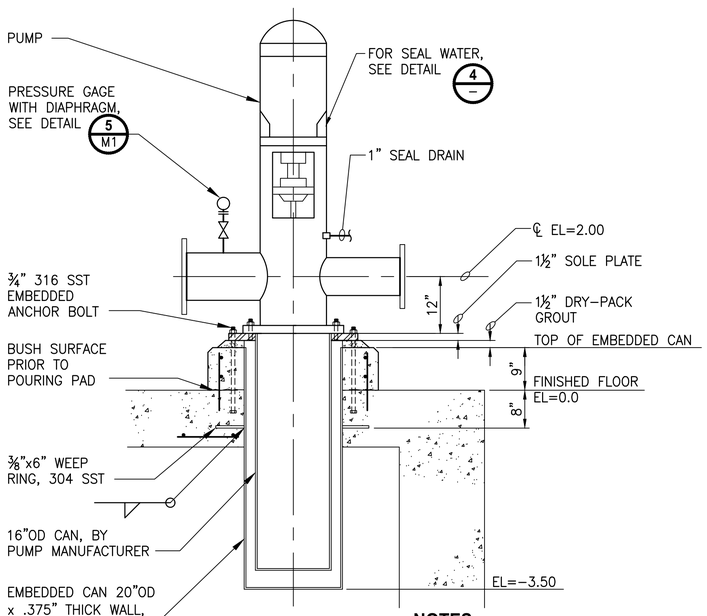

SECTION

NOTES:

1. USE SHIMS TO PLUMB PUMP CAN. LEVELING NUTS SHALL NOT BE USED.
2. EQUIPMENT PAD. SEE DETAIL 1/M1

RECYCLE PUMP DETAIL 1 / –
NO SCALE

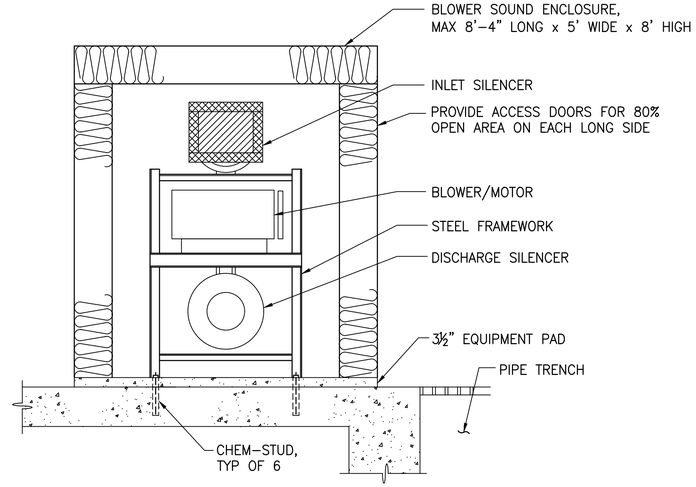

VIEW LOOKING NORTH BLOWER SOUND ENCLOSURE DETAIL 3 / –
NO SCALE

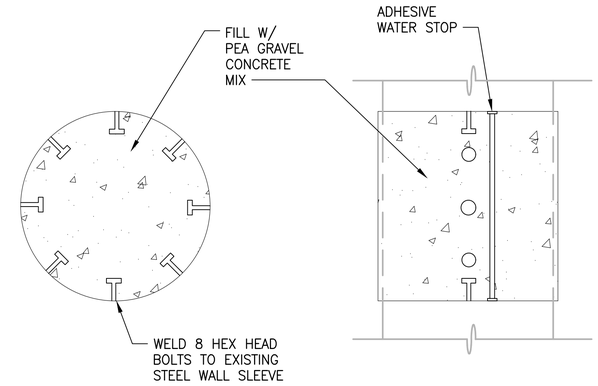

WALL HOLE CONCRETE FILL DETAIL 5 / –
NO SCALE

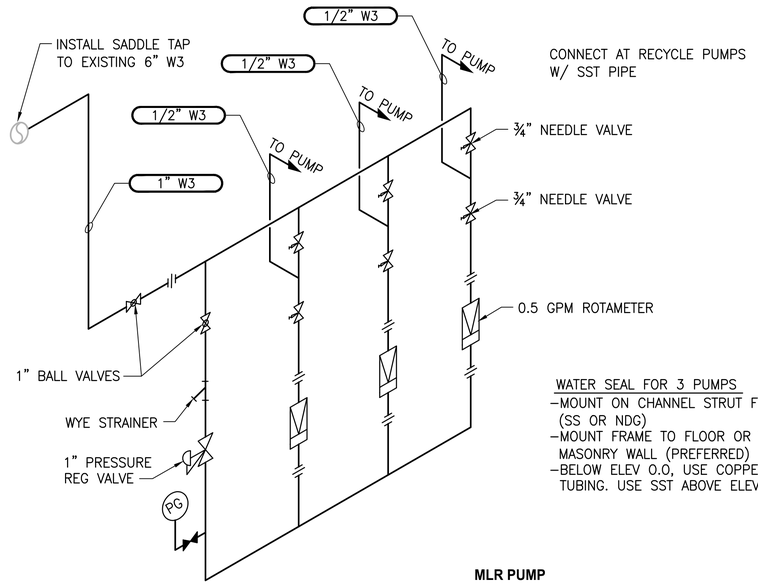

WATER SEAL FOR 3 PUMPS
- MOUNT ON CHANNEL STRUT FRAME (SS OR NDG)
- MOUNT FRAME TO FLOOR OR TO MASONRY WALL (PREFERRED)
- BELOW ELEV 0.0, USE COPPER TUBING. USE SST ABOVE ELEV 0.0.

MLR PUMP SEAL WATER DETAIL 4 / –
NO SCALE

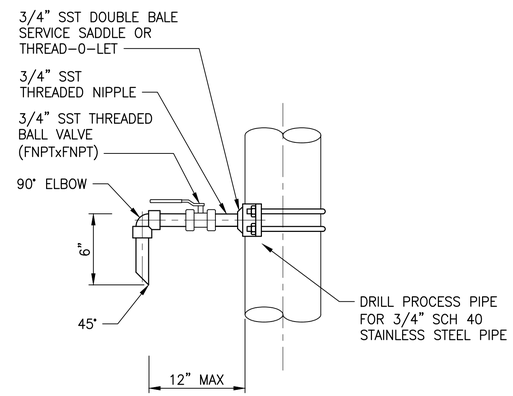

NOTE:
1. ORIENT EITHER VERT. OR HORZ FOR DRAIN OR TAP.
2. FOR DRAINS REPLACE 3/4" PIPE WITH 1" OR 2" PIPE, VALVES AND FITTINGS.

TYPICAL DRAIN/SAMPLE TAP DETAIL 6 / –
NO SCALE

	REVISIONS	DATE	BY

DESIGNED A. MAAS
DRAWN D. PETERSON
CHECKED L. ROSCOE
APPROVED B. BUNKER

ONE INCH AT FULL SCALE. IF NOT, SCALE ACCORDINGLY
FILE NAME PS1598102-M2
JOB No. 216-1598-102
DATE FEBRUARY 2018

ALLAN MAAS — STATE OF WASHINGTON — 27045 — REGISTERED PROFESSIONAL ENGINEER
FEBRUARY 23, 2018

Parametrix
ENGINEERING . PLANNING . ENVIRONMENTAL SCIENCES
1019 39TH AVENUE SE, SUITE 100 | PUYALLUP, WA 98374
P 253.604.6600
WWW.PARAMETRIX.COM

PROJECT NAME
THE CONSOLIDATED BOROUGH OF QUIL CEDA VILLAGE
MBR TREATMENT FACILITY UPGRADE
TULALIP, WASHINGTON

MECHANICAL DETAILS

DRAWING NO. 28 OF 157
M2

PATH: U:\PSO\Projects\Clients\1598-TulalipTribes\216-1598-102 MBR Upgrade\99Svcs\CADD\DWG PLOTTED BY: milesdor DATE: Wednesday, February 21, 2018 4:59:27 PM
LAYOUT: M2

NOTES:

1. RAIL SUPPORTS FOR MIXER M–1803 COORDINATE EXISTING RAIL WITH MANUFACTURERS RECOMMENDATIONS.
2. CONTRACTOR SHALL VERIFY DIMENSIONS ELEVATIONS AND LOCATIONS PRIOR TO CONSTRUCTION.
3. REMOVE EXISTING HOIST SOCKET AND INSTALL DAVIT CRANE. COORDINATE LOCATION WITH SCREEN MANUFACTURER.
4. CONTRACTOR TO VERIFY ON–SITE DIMENSION FOR SCREEN STAND WITH MANUFACTURER.
5. REMOVE 15' OF FLOOR MOUNTED RUBBER HOSE–WATER SUPPLY FOR SPIRAC SCREEN #2. REPLACE WITH 1–1/2" STAINLESS PIPE.

PROJECT WORK SHOWN ON THIS DRAWING IS ALL INCLUDED IN SCHEDULE A

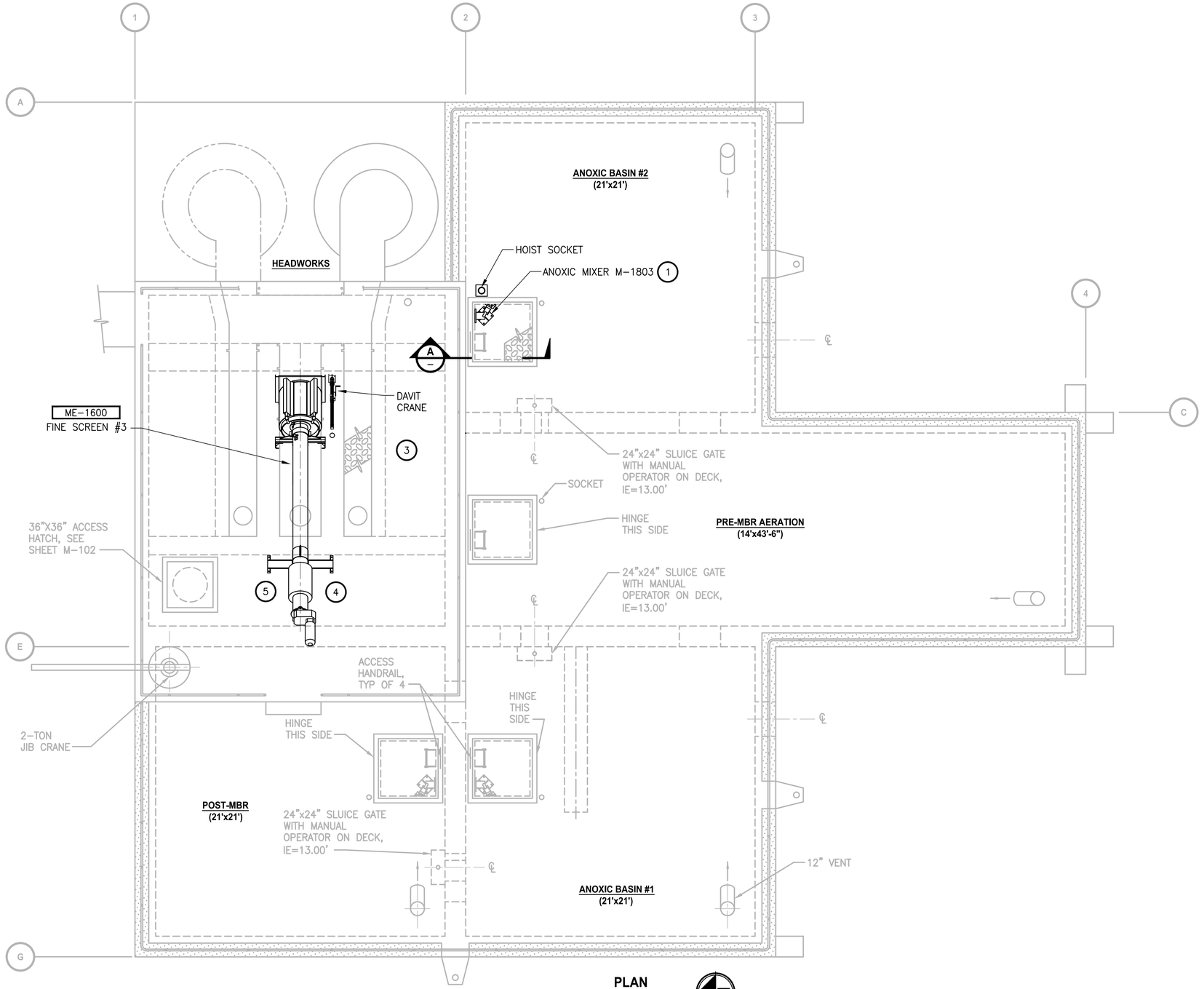

PLAN
SCALE: 1/4"=1'–0"

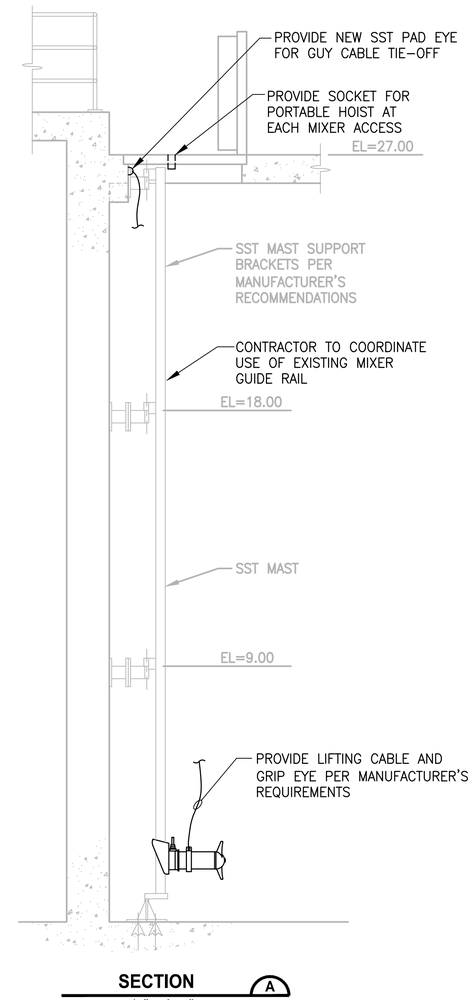

SECTION A
3/8"=1'–0"

	REVISIONS	DATE	BY

DESIGNED A. MAAS
DRAWN D. PETERSON
CHECKED L. ROSCOE
APPROVED B. BUNKER

ONE INCH AT FULL SCALE. IF NOT, SCALE ACCORDINGLY

FILE NAME PS1598102–M101
JOB No. 216–1598–102
DATE FEBRUARY 2018

ALLAN MAAS — STATE OF WASHINGTON — 27045 — REGISTERED PROFESSIONAL ENGINEER

FEBRUARY 23, 2018

Parametrix
ENGINEERING . PLANNING . ENVIRONMENTAL SCIENCES
1019 39TH AVENUE SE, SUITE 100 | PUYALLUP, WA 98374
P 253.604.6600
WWW.PARAMETRIX.COM

PROJECT NAME
THE CONSOLIDATED BOROUGH OF QUIL CEDA VILLAGE
MBR TREATMENT FACILITY UPGRADE
TULALIP, WASHINGTON

HEADWORKS ANOXIC FACILITY GENERAL ARRANGEMENT

DRAWING NO. 29 OF 157
M101

PATH: U:\PSO\Projects\Clients\1598–TulalipTribes\216–1598–102 MBR Upgrade\99Svcs\CADD\DWG
PLOTTED BY: peterden DATE: Friday, February 23, 2018 5:17:18 PM
LAYOUT: M101

PATH: U:\PSO\Projects\Clients\1598-TulalipTribes\216-1598-102 MBR Upgrade\99Svcs\CADD\DWG PLOTTED BY: peterden DATE: Friday, February 23, 2018 5:19:28 PM
LAYOUT: M102

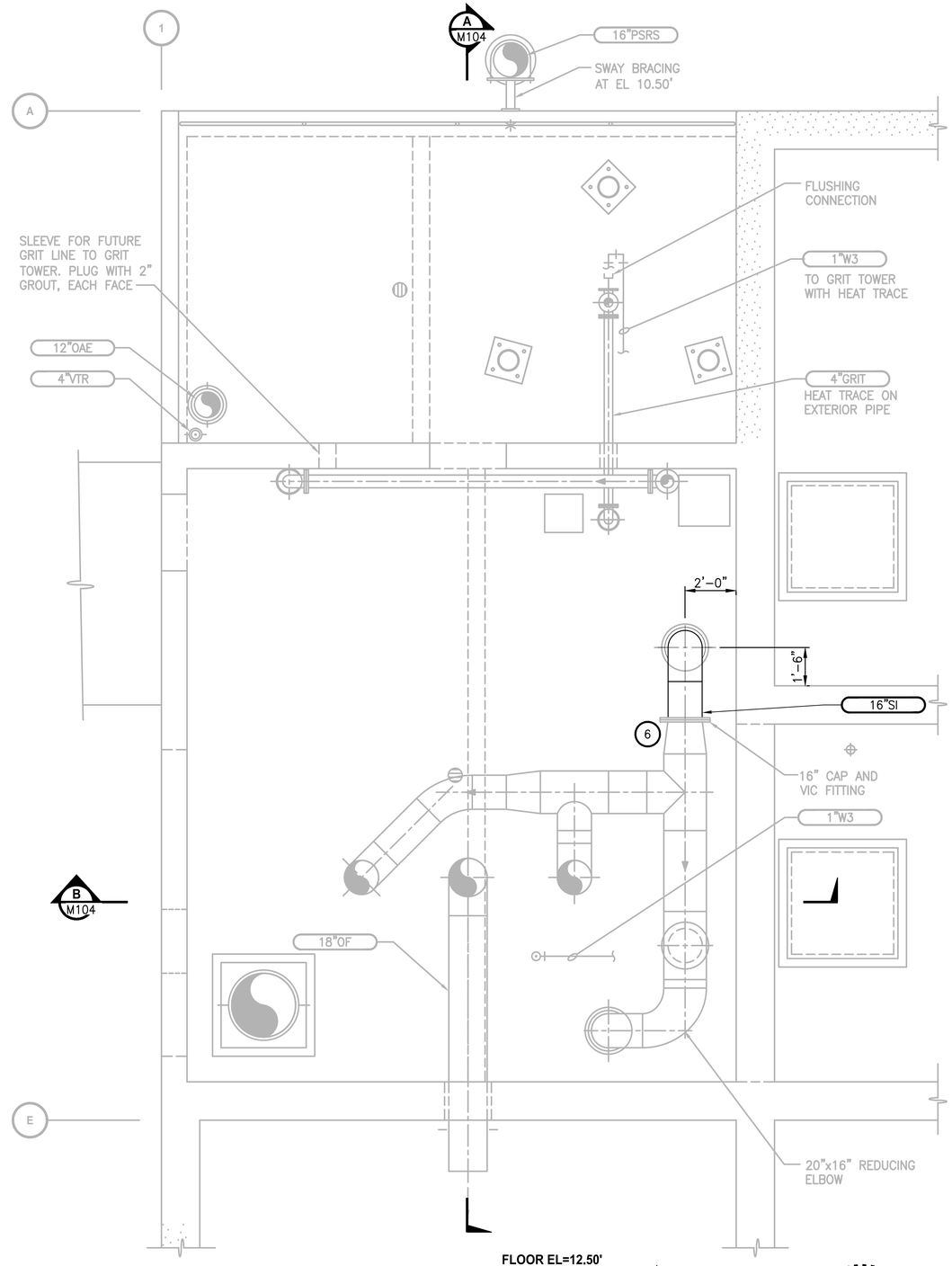

FLOOR EL=12.50'

PLAN

SCALE: 3/8"=1'-0"

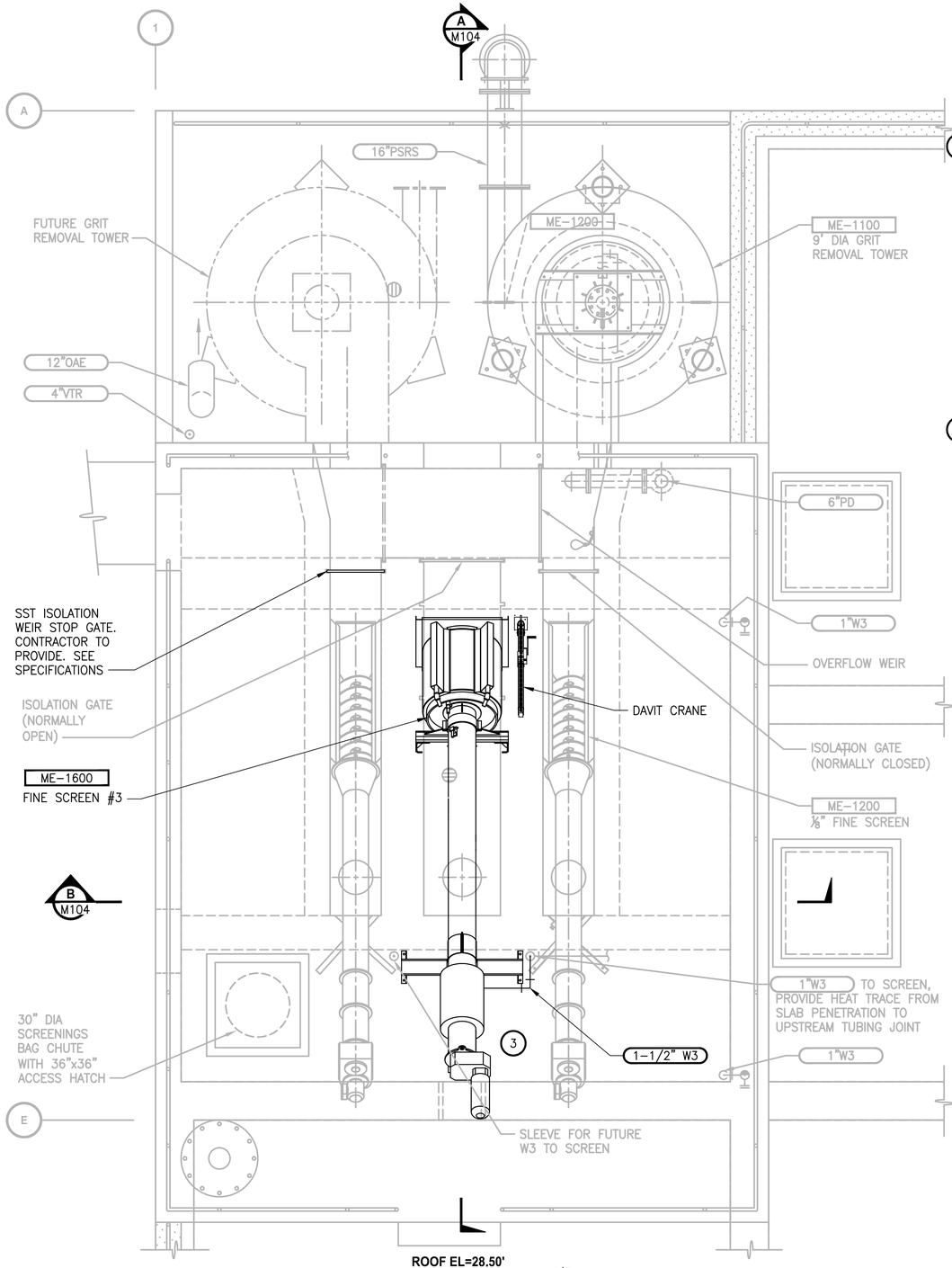

ROOF EL=28.50'

PLAN

SCALE: 3/8"=1'-0"

NOTES:

1. ALL PIPE PENETRATIONS THROUGH WALLS AND SLABS REQUIRE CORE DRILLS AND MECHANICAL SEALS. SEE SHEET M1, DETAIL 8.
2. DIMENSIONS ARE APPROXIMATE. CONTRACTOR TO VERIFY.
3. CONTRACTOR TO COORDINATE LOCATION OF SCREEN SUPPORT AND DAVIT WITH MANUFACTURER.
4. CONTRACTOR TO COORDINATE WITH SCREEN SUPPLIER ON CHANNEL WIDTH AT SCREEN AND TO CONSTRUCT SO WALLS ARE ABSOLUTELY VERTICAL ±3MM AND MATCH SCREEN REQUIREMENTS.
5. INSTALL 1½" SST WATER SUPPLY PIPE TO SCREEN INCLUDING BALL VALVES, WYE STRAINER AND HEAT TRACE. SEE SPECIFICATION 46 20 70 FOR WATER SUPPLY AND HOSE REQUIREMENTS. CONNECT TO EXISTING W3 PROVIDING WATER TO SCREEN #1 AND #2.
6. COORDINATE FLOW SHUT DOWN (IF NECESSARY) WITH OPERATOR TO REMOVE VIC FLANGE AND CONNECT NEW 16". NEW CORE DRILL HOLE REQUIRED. SEE SPECIFICATIONS.

PROJECT WORK SHOWN ON THIS DRAWING IS ALL INCLUDED IN SCHEDULE A

▷	REVISIONS	DATE	BY

DESIGNED A. MAAS
DRAWN D. PETERSON
CHECKED L. ROSCOE
APPROVED B. BUNKER

ONE INCH AT FULL SCALE. IF NOT, SCALE ACCORDINGLY

FILE NAME PS1598102-M102
JOB No. 216-1598-102
DATE FEBRUARY 2018

ALLAN MAAS — STATE OF WASHINGTON — 27045 — REGISTERED PROFESSIONAL ENGINEER

FEBRUARY 23, 2018

Parametrix
ENGINEERING . PLANNING . ENVIRONMENTAL SCIENCES
1019 39TH AVENUE SE, SUITE 100 | PUYALLUP, WA 98374
P 253.604.6600
WWW.PARAMETRIX.COM

PROJECT NAME
THE CONSOLIDATED BOROUGH OF QUIL CEDA VILLAGE MBR TREATMENT FACILITY UPGRADE
TULALIP, WASHINGTON

HEADWORKS EL 12.50' - 29.50'

DRAWING NO. 30 OF 157

M102

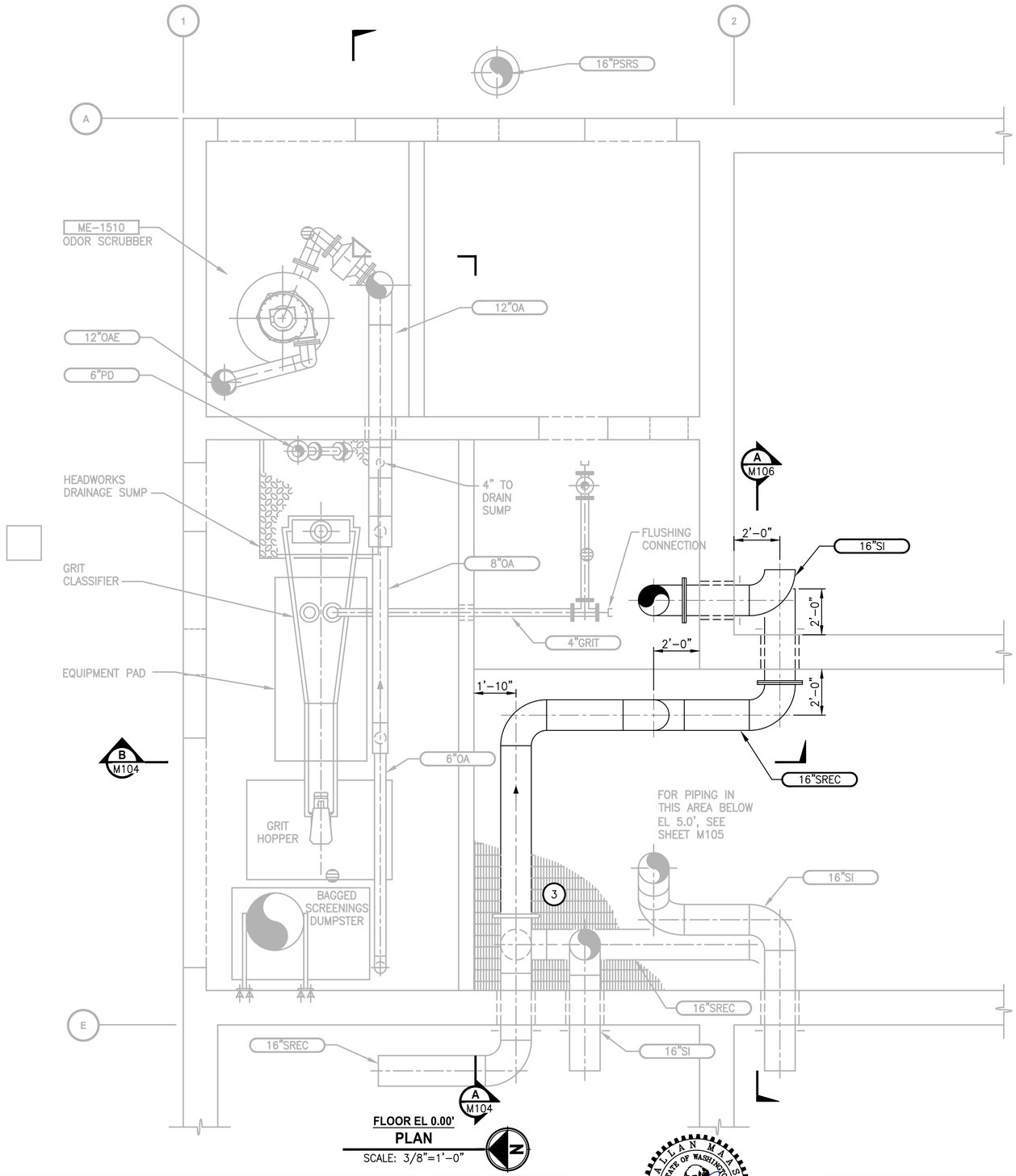

FLOOR EL 0.00'

PLAN

SCALE: 3/8"=1'-0"

NOTES:

1. ALL PIPE PENETRATIONS THROUGH WALLS AND SLABS REQUIRE CORE DRILL AND MECHANICAL SEALS. SEE SHEET M1, DETAIL 8.
2. DIMENSIONS ARE APPROXIMATE. CONTRACTOR TO VERIFY.
3. COORDINATE FLOW SHUT DOWN WITH OPERATOR TO REMOVE VIC FLANGE AND CONNECT NEW 16". NEW CORE DRILL HOLE REQUIRED AT ANOXIC TANK #2. SEE SPECIFICATIONS.
4. GROOVED COUPLINGS OR FLANGES ARE SUGGESTED TO SIMPLIFY PIPE INSTALLATION.

PROJECT WORK SHOWN ON THIS DRAWING IS ALL INCLUDED IN SCHEDULE A

	REVISIONS	DATE	BY

DESIGNED A. MAAS
DRAWN D. PETERSON
CHECKED L. ROSCOE
APPROVED B. BUNKER

ONE INCH AT FULL SCALE. IF NOT, SCALE ACCORDINGLY

FILE NAME PS1598102-M103
JOB No. 216-1598-102
DATE FEBRUARY 2018

ALLAN MAAS — STATE OF WASHINGTON — 27045 — REGISTERED PROFESSIONAL ENGINEER

FEBRUARY 23, 2018

Parametrix
ENGINEERING . PLANNING . ENVIRONMENTAL SCIENCES
1019 39TH AVENUE SE, SUITE 100 | PUYALLUP, WA 98374
P 253.604.6600
WWW.PARAMETRIX.COM

PROJECT NAME
THE CONSOLIDATED BOROUGH OF QUIL CEDA VILLAGE
MBR TREATMENT FACILITY UPGRADE
TULALIP, WASHINGTON

HEADWORKS FLOOR EL 0.00'

DRAWING NO. 31 OF 157

M103

PATH: U:\PSO\Projects\Clients\1598-TulalipTribes\216-1598-102 MBR Upgrade\99Svcs\CADD\DWG PLOTTED BY: peterden DATE: Friday, February 23, 2018 5:23:56 PM
LAYOUT: M103

PROJECT WORK SHOWN ON THIS DRAWING IS ALL INCLUDED IN SCHEDULE A

NOTES:

1. ALL PIPE PENETRATIONS THROUGH WALLS AND SLABS REQUIRE CORE DRILL AND MECHANICAL SEALS. SEE SHEET M1, DETAIL 8.
2. COORDINATE FLOW SHUT DOWN WITH OPERATOR TO REMOVE VIC FLANGE AND CONNECT NEW 16". SEE SPECIFICATIONS.
3. CONTRACTOR TO MODIFY GRATING TO PROVIDE VALVE NUT OPERATOR ACCESS.

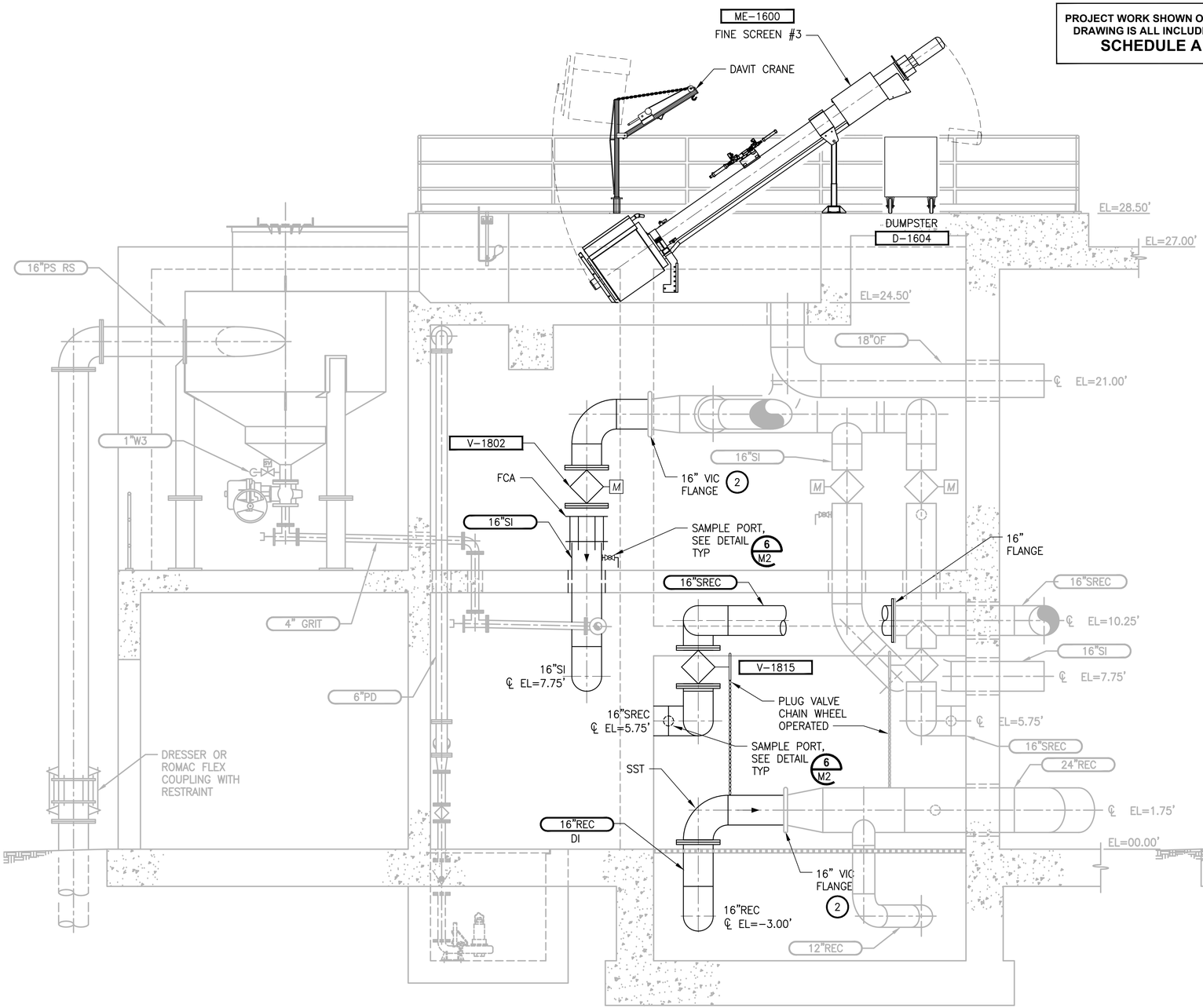

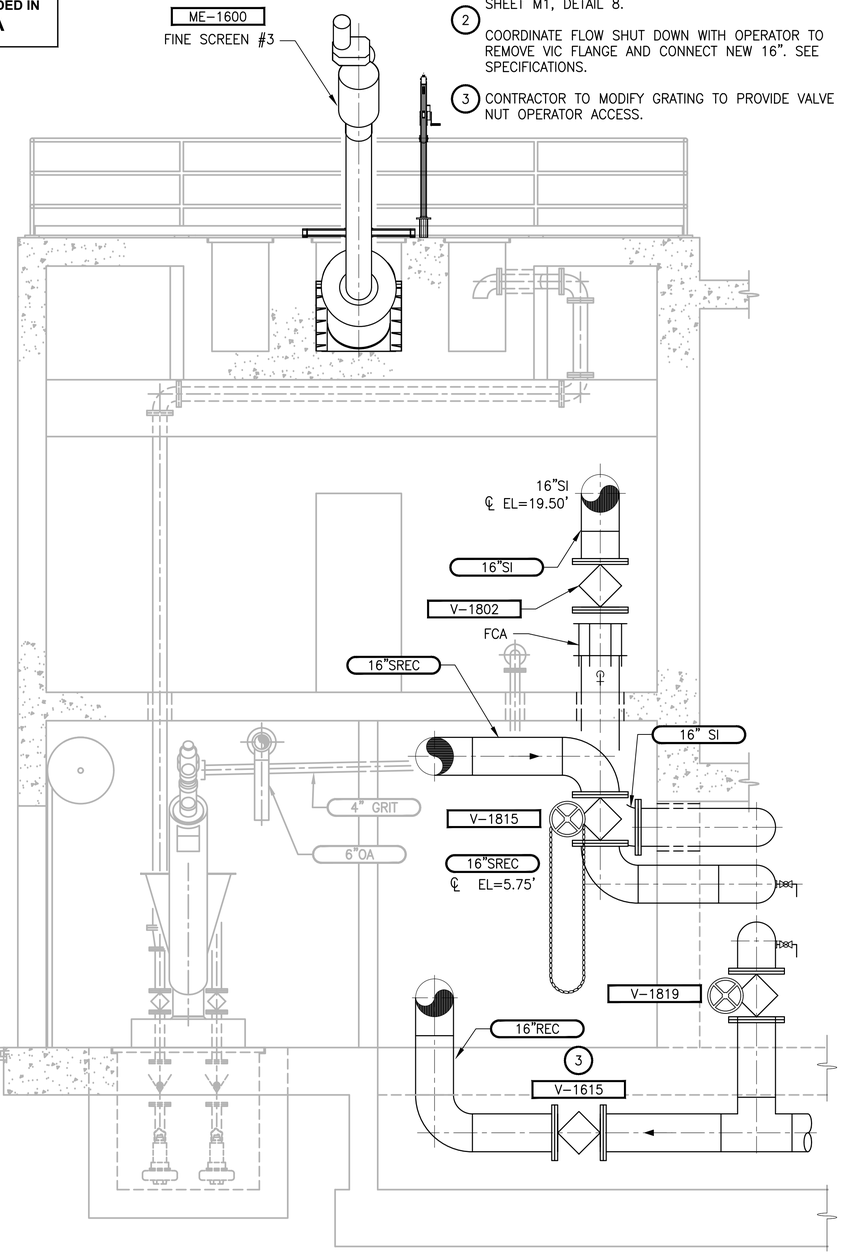

SECTION A — 3/8"=1'-0" — M102,103

SECTION B — 3/8"=1'-0" — M102,103

ALLAN MAAS — STATE OF WASHINGTON — 37045 — REGISTERED PROFESSIONAL ENGINEER

FEBRUARY 23, 2018

	REVISIONS	DATE	BY

DESIGNED A. MAAS
DRAWN D. PETERSON
CHECKED L. ROSCOE
APPROVED B. BUNKER

ONE INCH AT FULL SCALE. IF NOT, SCALE ACCORDINGLY

FILE NAME PS1598102-M104
JOB No. 216-1598-102
DATE FEBRUARY 2018

Parametrix
ENGINEERING . PLANNING . ENVIRONMENTAL SCIENCES
1019 39TH AVENUE SE, SUITE 100 | PUYALLUP, WA 98374
P 253.604.6600
WWW.PARAMETRIX.COM

PROJECT NAME
THE CONSOLIDATED BOROUGH OF QUIL CEDA VILLAGE
MBR TREATMENT FACILITY UPGRADE
TULALIP, WASHINGTON

HEADWORKS SECTIONS

DRAWING NO. 32 OF 157

M104

PATH: U:\PSO\Projects\Clients\1598-TulalipTribes\216-1598-102 MBR Upgrade\99Svcs\CADD\DWG
PLOTTED BY: peterden
DATE: Friday, February 23, 2018 5:20:12 PM
LAYOUT: M104

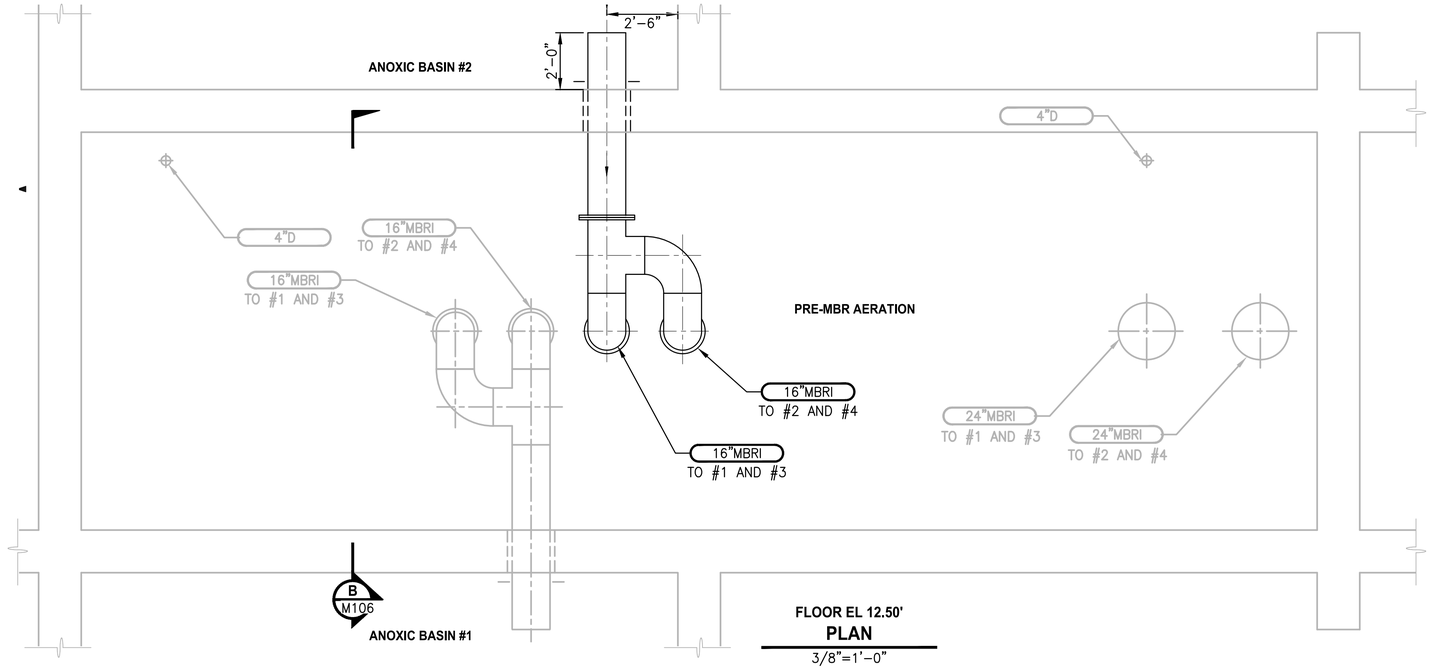

FLOOR EL 12.50'

PLAN

3/8"=1'-0"

NOTES:

1. ALL PIPE PENETRATIONS THROUGH WALLS AND SLABS REQUIRE CORE DRILL AND MECHANICAL SEALS. SEE SHEET M1, DETAIL 8.
2. REMOVE EXISTING 12" MBRI PIPE TEES AND REDUCERS AND REPLACE WITH 20" MBRI. DI BELOW GRATING AND SST ABOVE GRATING. GIVE 12" SST PIPE TO OWNER.
3. ROTATE EXISTING VALVE 90° TO ALLOW ROOM FOR NEW VALVE. CONTRACTOR TO CHECK NEW VALVE FIT DIMENSIONS BEFORE DELIVERY AND INSTALLATION. COORDINATE FLOW SHUTDOWN.
4. COORDINATE FLOW SHUT DOWN AND PRE-AREATION TANK DRAINING WITH OWNER. NEW MBRI AND REC PIPES ON EAST SIDE OF PIPE GALLERY TO BE INSTALLED PRIOR TO MBRI PIPE REPLACEMENT ON WEST SIDE OF GALLERY.
5. SST TO DI JOINTS ALL TO HAVE DIELECTRIC ISOLATION.
6. COORDINATE FLOW SHUT DOWN WITH OPERATOR TO REMOVE VIC FLANGE AND CONNECT NEW 16". SEE SPECIFICATIONS.
7. CONTRACTOR TO VERIFY DIMENSIONS BEFORE PIPE FABRICATION.
8. A KNIFE GATE VALVE WOULD BE AN ACEPTABLE ALTERNATIVE FOR V1919. INSTALLATION WOULD BE EASIER THAN A PLUG VALVE.

ALL PROJECT WORK OUTSIDE THE BOX NOTED FOR SCHEDULE B, SHALL BE SCHEDULE A

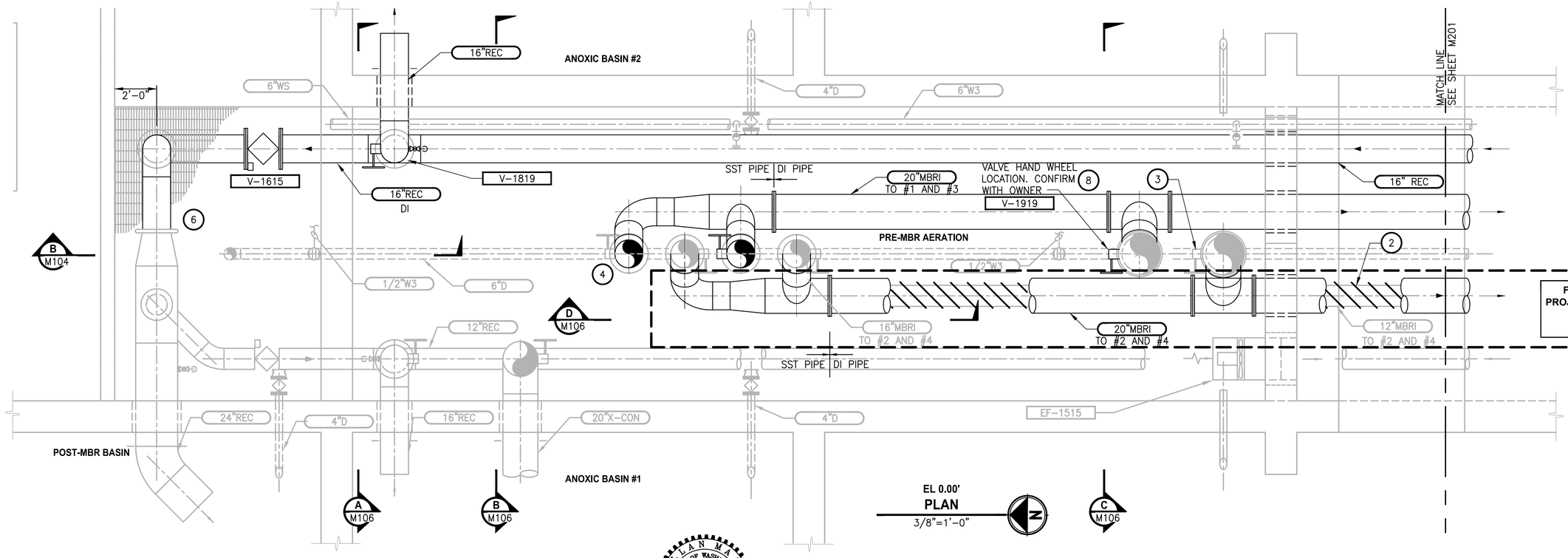

FOR THIS DRAWING, ONLY PROJECT WORK INSIDE THIS BOX IS INCLUDED IN SCHEDULE B

EL 0.00'

PLAN

3/8"=1'-0"

	REVISIONS	DATE	BY

DESIGNED A. MAAS
DRAWN D. PETERSON
CHECKED L. ROSCOE
APPROVED B. BUNKER

ONE INCH AT FULL SCALE. IF NOT, SCALE ACCORDINGLY

FILE NAME PS1598102-M105
JOB No. 216-1598-102
DATE FEBRUARY 2018

ALLAN MAAS — STATE OF WASHINGTON — 27045 — REGISTERED PROFESSIONAL ENGINEER

FEBRUARY 23, 2018

Parametrix
ENGINEERING . PLANNING . ENVIRONMENTAL SCIENCES
1019 39TH AVENUE SE, SUITE 100 | PUYALLUP, WA 98374
P 253.604.6600
WWW.PARAMETRIX.COM

PROJECT NAME
THE CONSOLIDATED BOROUGH OF QUIL CEDA VILLAGE
MBR TREATMENT FACILITY UPGRADE
TULALIP, WASHINGTON

GALLERY AND PRE-MBR PIPING PLANS

DRAWING NO. 33 OF 157

M105

PATH: U:\PSO\Projects\Clients\1598-Tulalip Tribes\216-1598-102 MBR Upgrade\99Sucs\CADD\DWG
PLOTTED BY: peterden DATE: Friday, February 23, 2018 5:21:39 PM
LAYOUT: M105

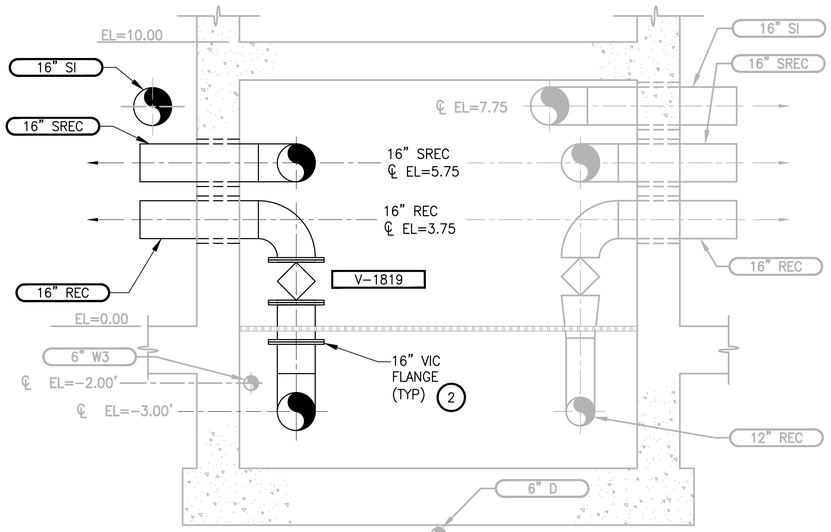

SECTION A — 3/8"=1'-0" — M103,105

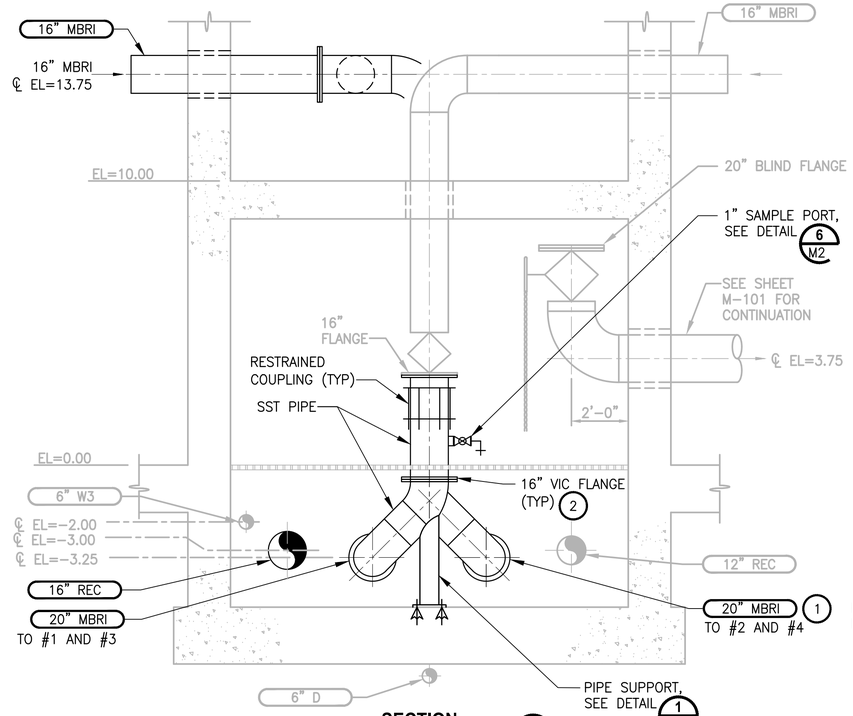

SECTION B — 3/8"=1'-0" — M105

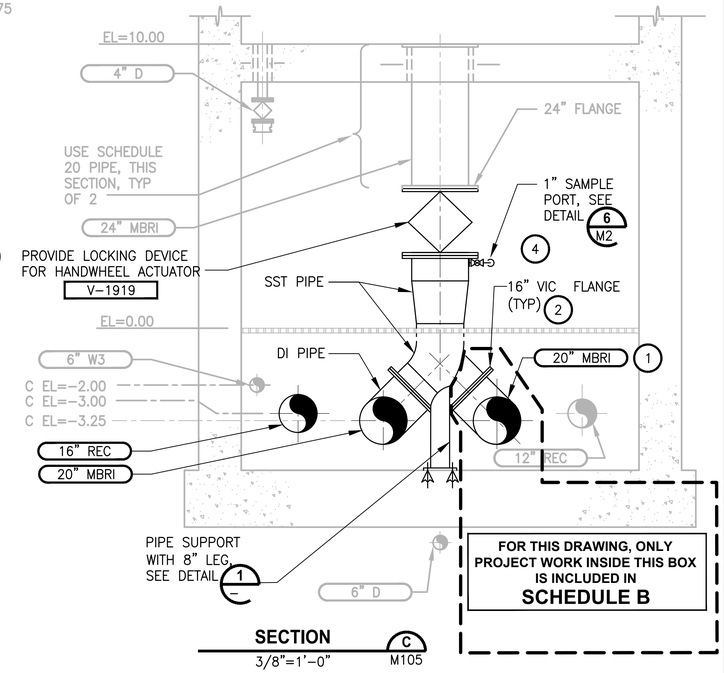

SECTION C — 3/8"=1'-0" — M105

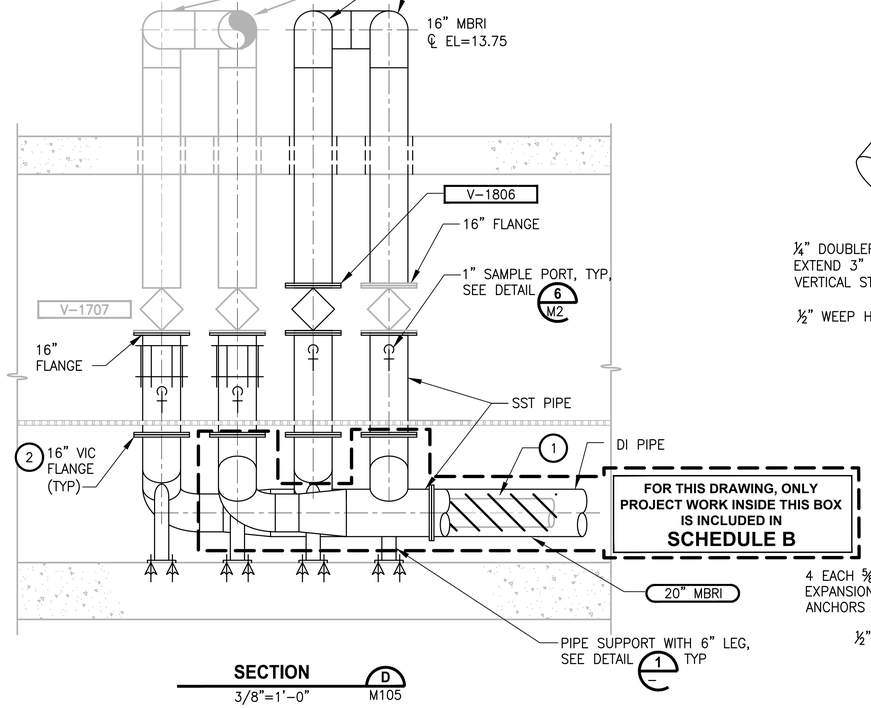

SECTION D — 3/8"=1'-0" — M105

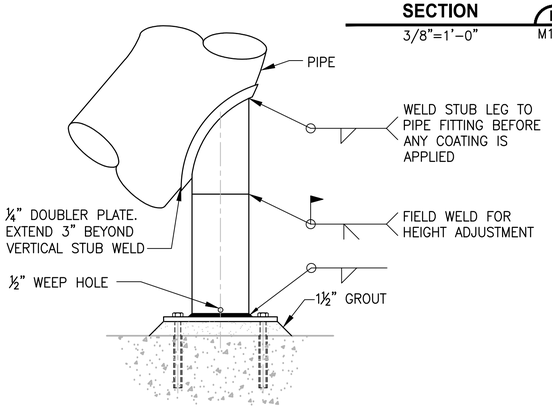

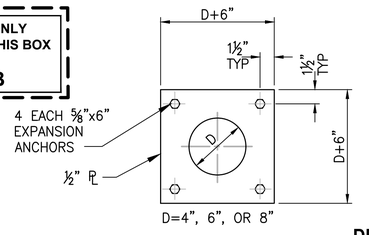

DETAIL 1 — NO SCALE — M106

NOTES:

1. REMOVE EXISTING 12-INCH MBRI REPLACE WITH 20" MBRI. SCHEDULE B.
2. SST DI VIC OR FLANGE TO FLANGE JOINTS TO HAVE DIELECTRIC ISOLATION.
3. SST WELDED JOINTS ARE ACCEPTABLE.
4. SEE NOTE 3 M105.
5. CONTRACTOR RESPONSIBLE FOR DIMENSION VERIFICATION BEFORE PIPE FABRICATION.

ALL PROJECT WORK OUTSIDE THE BOX NOTED FOR SCHEDULE B, SHALL BE SCHEDULE A

	REVISIONS	DATE	BY

DESIGNED A. MAAS
DRAWN D. PETERSON
CHECKED L. ROSCOE
APPROVED B. BUNKER

ONE INCH AT FULL SCALE. IF NOT, SCALE ACCORDINGLY
FILE NAME PS1598102-M106
JOB No. 216-1598-102
DATE FEBRUARY 2018

ALLAN MAAS — STATE OF WASHINGTON — 27045 — REGISTERED PROFESSIONAL ENGINEER
FEBRUARY 23, 2018

Parametrix
ENGINEERING . PLANNING . ENVIRONMENTAL SCIENCES
1019 39TH AVENUE SE, SUITE 100 | PUYALLUP, WA 98374
P 253.604.6600
WWW.PARAMETRIX.COM

PROJECT NAME
THE CONSOLIDATED BOROUGH OF QUIL CEDA VILLAGE
MBR TREATMENT FACILITY UPGRADE
TULALIP, WASHINGTON

GALLERY SECTIONS

DRAWING NO. 34 OF 157
M106

PATH: U:\PSO\Projects\Clients\1598-TulalipTribes\216-1598-102 MBR Upgrade\99Svcs\CADD\DWG PLOTTED BY: milesdor DATE: Tuesday, February 20, 2018 4:46:54 PM LAYOUT: M106

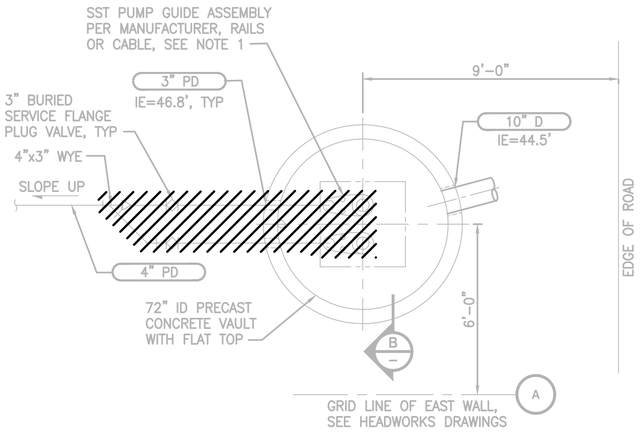

EXISTING
PLANT DRAIN PUMP STATION
DEMO PLAN
3/8"=1'-0"

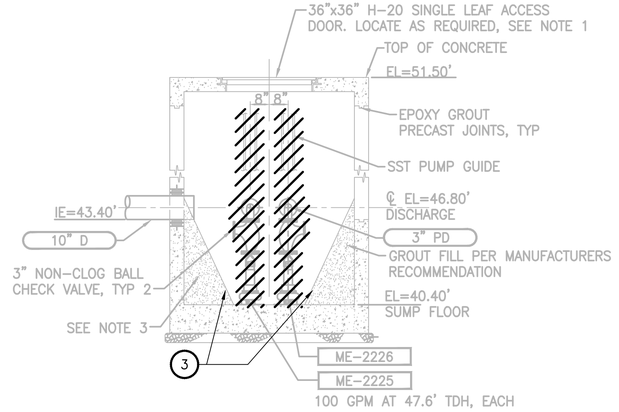

EXISTING
DEMO SECTION B
3/8"=1'-0"

NOTES:

1. LOCATE PUMP GUIDES AND DISCHARGE PIPING IN ACCORDANCE WITH PUMP MANUFACTURER MINIMUM CLEARANCES.
2. INSTALL 4" PD AT UNIFORM SLOPE TO TIE IN CONNECTION.
3. CONTRACTOR SHALL REMOVE SLOPED CONCRETE IN WET WELL, AS NEEDED, TO ENSURE PUMP CLEARS HATCH OPENING WHEN REMOVING PUMP.
4. PIPE INCREASING FROM 3" TO 4". CONTRACTOR SHALL EXPAND PIPE PENETRATION OPENINGS IF NEEDED. RESEAL PIPE PENETRATIONS WITH NON-SHRINK EPOXY GROUT.
5. CONTRACTOR TO VERIFY DIMENSIONS, ELEVATIONS, AND LOCATIONS PRIOR TO CONSTRUCTION.
6. ALL JOINTS AND COUPLINGS SHALL BE RESTRAINED.
7. ALL EXPOSED STEEL AND HARDWARE IN WET WELL SHALL BE 316L STAINLESS STEEL.
8. CONTRACTOR TO FIELD VERIFY CONNECTION REQUIRED TO EXISTING 4" PD.

PROJECT WORK SHOWN ON THIS DRAWING IS ALL INCLUDED IN SCHEDULE A

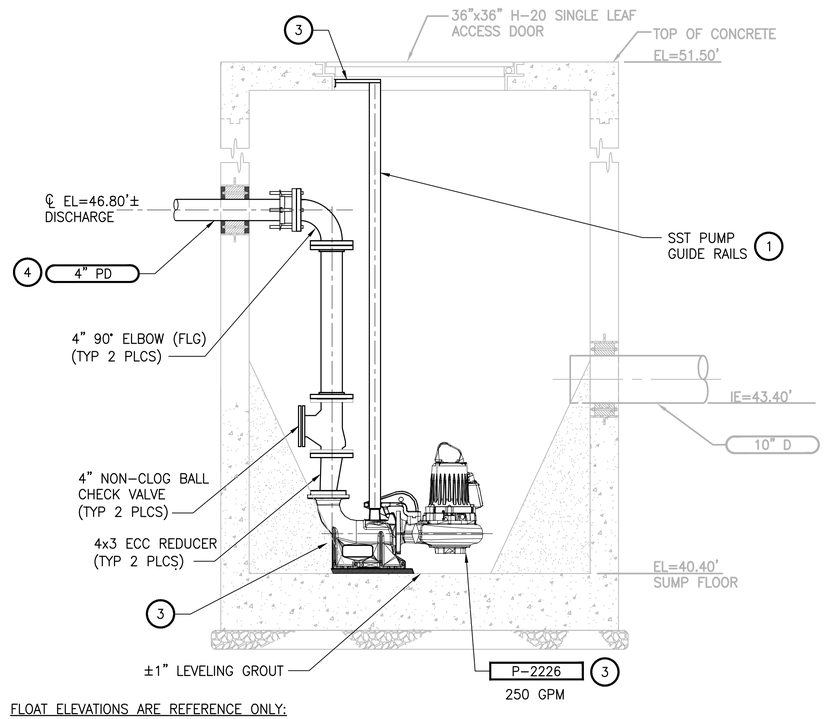

FLOAT ELEVATIONS ARE REFERENCE ONLY:

ACTUAL ELEVATIONS SHALL BE CONFIRMED WITH THE OWNER.

1.) START LAG AND HIGH LEVEL ALARM=43.42'
2.) NORMAL START PUMP=42.62'
3.) NORMAL STOP PUMP=41.82'
4.) LOW WATER ALARM=41.65'
5.) LOW WATER ALARM (BACK-UP)=41.65'

SECTION A
3/4"=1'-0"

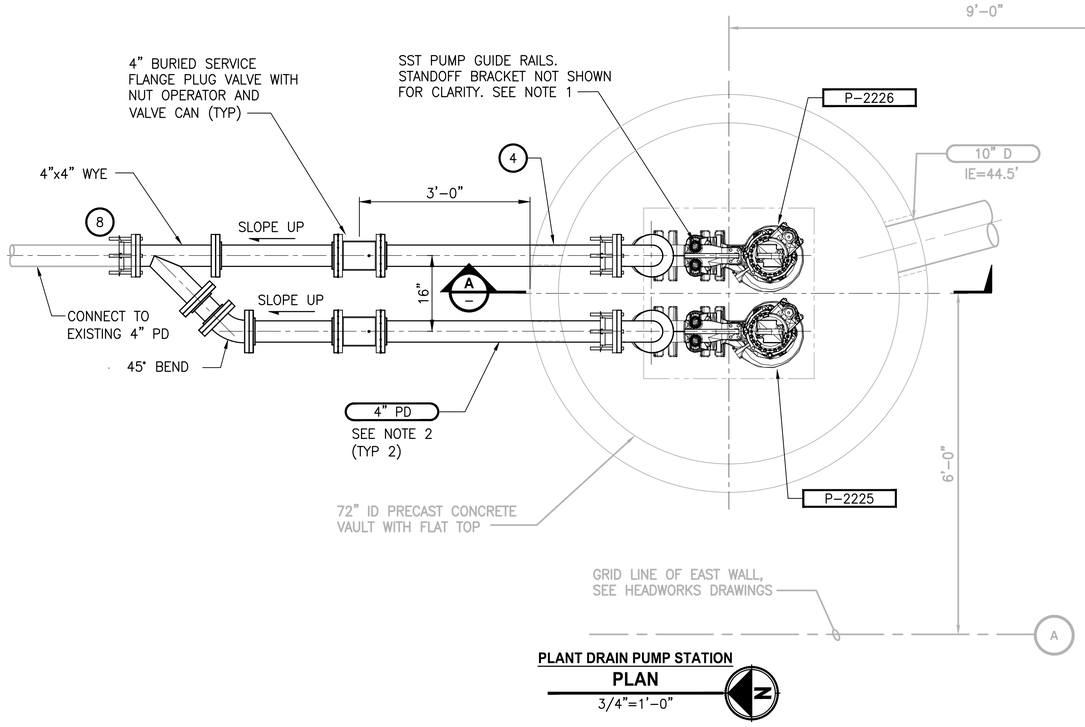

PLANT DRAIN PUMP STATION
PLAN
3/4"=1'-0"

	REVISIONS	DATE	BY

DESIGNED J. LINKE
DRAWN D. PETERSON
CHECKED L. ROSCOE
APPROVED B. BUNKER

ONE INCH AT FULL SCALE. IF NOT, SCALE ACCORDINGLY

FILE NAME PS1598102-M111
JOB No. 216-1598-102
DATE FEBRUARY 2018

JOSEPH STEPHEN LINK — STATE OF WASHINGTON — 48954 — REGISTERED PROFESSIONAL ENGINEER

FEBRUARY 23, 2018

Parametrix
ENGINEERING . PLANNING . ENVIRONMENTAL SCIENCES
1019 39TH AVENUE SE, SUITE 100 | PUYALLUP, WA 98374
P 253.604.6600
WWW.PARAMETRIX.COM

PROJECT NAME
THE CONSOLIDATED BOROUGH OF QUIL CEDA VILLAGE
MBR TREATMENT FACILITY UPGRADE
TULALIP, WASHINGTON

PLANT DRAIN PUMP STATION

DRAWING NO. 35 OF 157
M111

PATH: U:\PSO\Projects\Clients\1598-TulalipTribes\216-1598-102 MBR Upgrade\99Svcs\CADD\DWG
PLOTTED BY: peterden DATE: Monday, February 26, 2018 9:10:24 AM
LAYOUT: M111

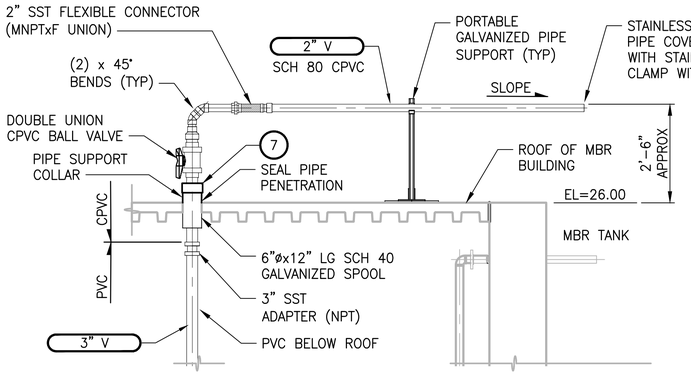

REC VENT PIPE
SECTION A
NO SCALE

ALL PROJECT WORK OUTSIDE THE BOXES NOTED FOR SCHEDULE A, SHALL BE
SCHEDULE B

NOTES:

1. SEE SHEET M202 FOR LIQUID PIPING AND SHEET M203 FOR AERATION PIPING DETAILED PLANS.
2. ALL PIPE ALL PIPE PENETRATIONS THROUGH WALLS AND SLABS REQUIRE MECHANICAL SEALS. SEE SHEET M1, DETAIL 8.
3. SEE KUBOTA DRAWINGS AND EQUIPMENT LIST FOR DETAILED MBR SUPPLY.
4. CUT PLUGS FROM EXISTING DI TEES. CUT DI PIPES GOING WEST FROM TEES AND INSTALL GATE VALVES AT WEST LEG OF BOTH TEES. (ADDITIVE BID ITEM).
5. REMOVE EXISTING 12" MBRI AND REPLACE WITH 20" MBRI. SEE M202 AND M105 FOR CONTINUATION. GIVE 12" SST PIPE TO OWNER.
6. FOUR REC VENT PIPE LOCATIONS. CORE DRILL AND INSTALL PER SECTION A. (4 PLCS)
7. FERNCO 6" QWIK CAP.
8. EACH PERM LINE WILL DISCHARGE APPROXIMATE 2000 GALLONS OF WATER WHEN CUT OPEN.

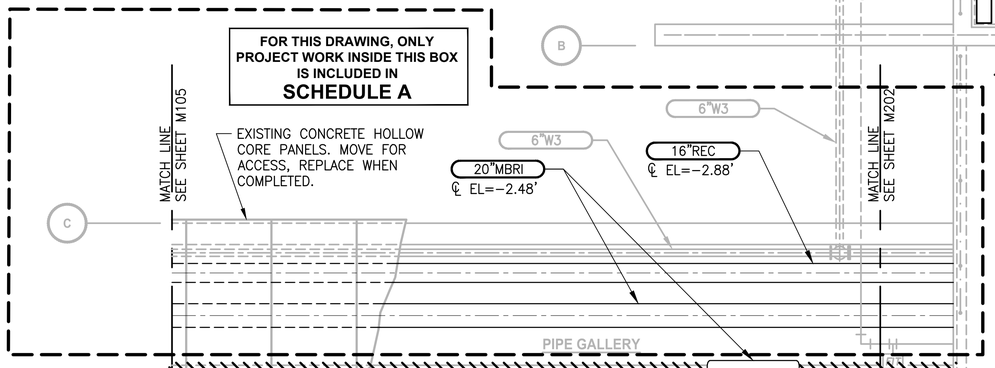

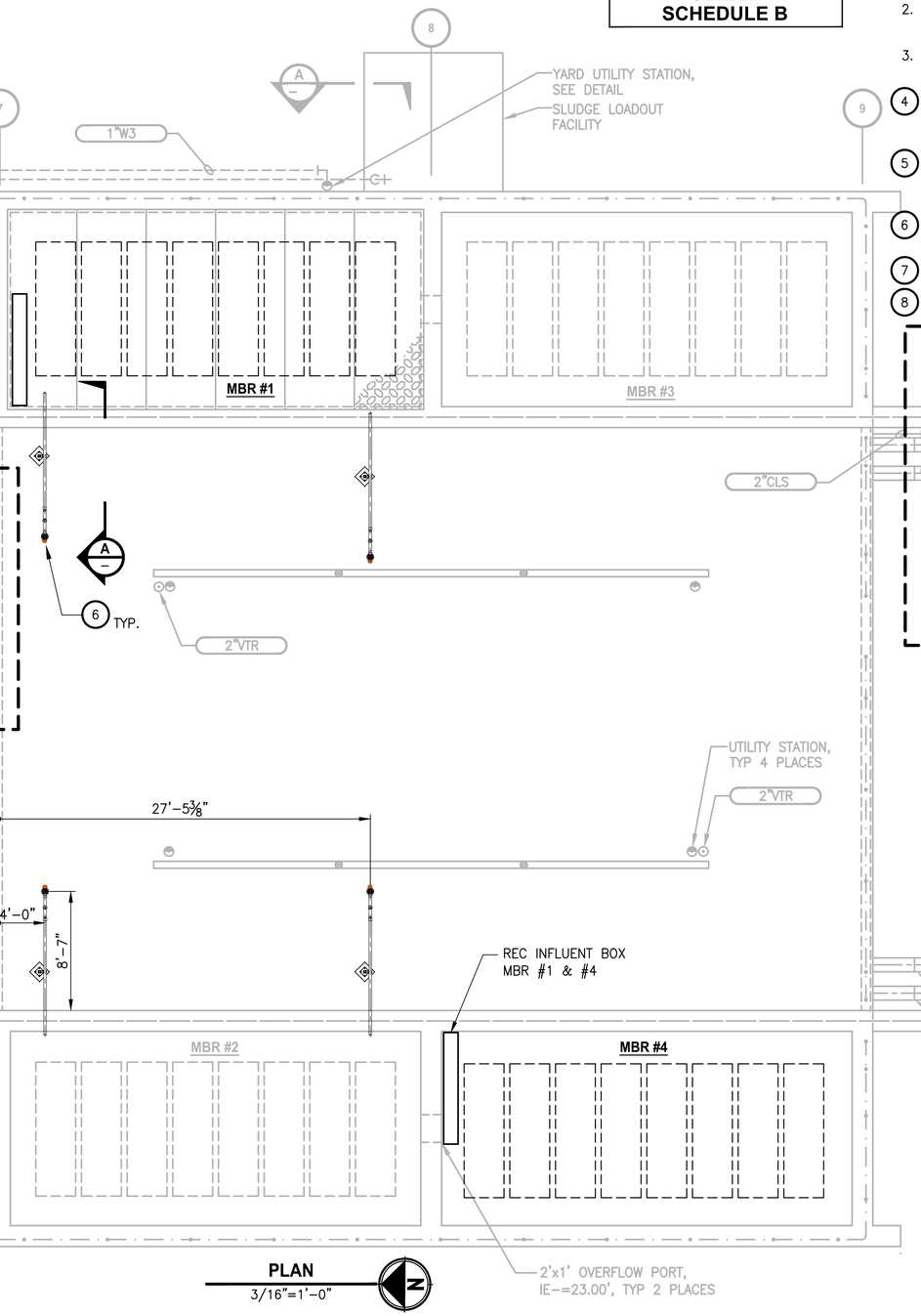

PLAN
3/16"=1'-0"

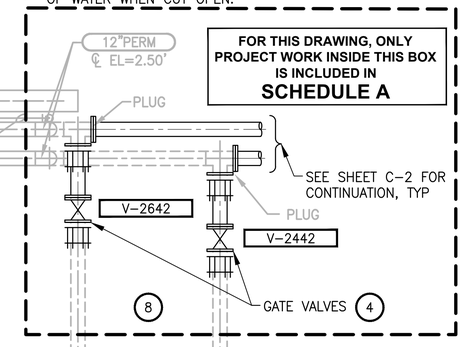

	REVISIONS	DATE	BY

DESIGNED A. MAAS
DRAWN D. PETERSON
CHECKED L. ROSCOE
APPROVED B. BUNKER

ONE INCH AT FULL SCALE. IF NOT, SCALE ACCORDINGLY
FILE NAME PS1598102-M201
JOB No. 216-1598-102
DATE FEBRUARY 2018

ALLAN MAAS — STATE OF WASHINGTON — 27045 — REGISTERED PROFESSIONAL ENGINEER
FEBRUARY 23, 2018

Parametrix
ENGINEERING . PLANNING . ENVIRONMENTAL SCIENCES
1019 39TH AVENUE SE, SUITE 100 | PUYALLUP, WA 98374
P 253.604.6600
WWW.PARAMETRIX.COM

PROJECT NAME
THE CONSOLIDATED BOROUGH OF QUIL CEDA VILLAGE
MBR TREATMENT FACILITY UPGRADE
TULALIP, WASHINGTON

MBR BUILDING PLAN

DRAWING NO. 36 OF 157
M201

PATH: U:\PSO\Projects\Clients\1598-TulalipTribes\216-1598-102 MBR Upgrade\99Svcs\CADD\DWG PLOTTED BY: milesdar DATE: Tuesday, February 20, 2018 4:48:40 PM LAYOUT: M201

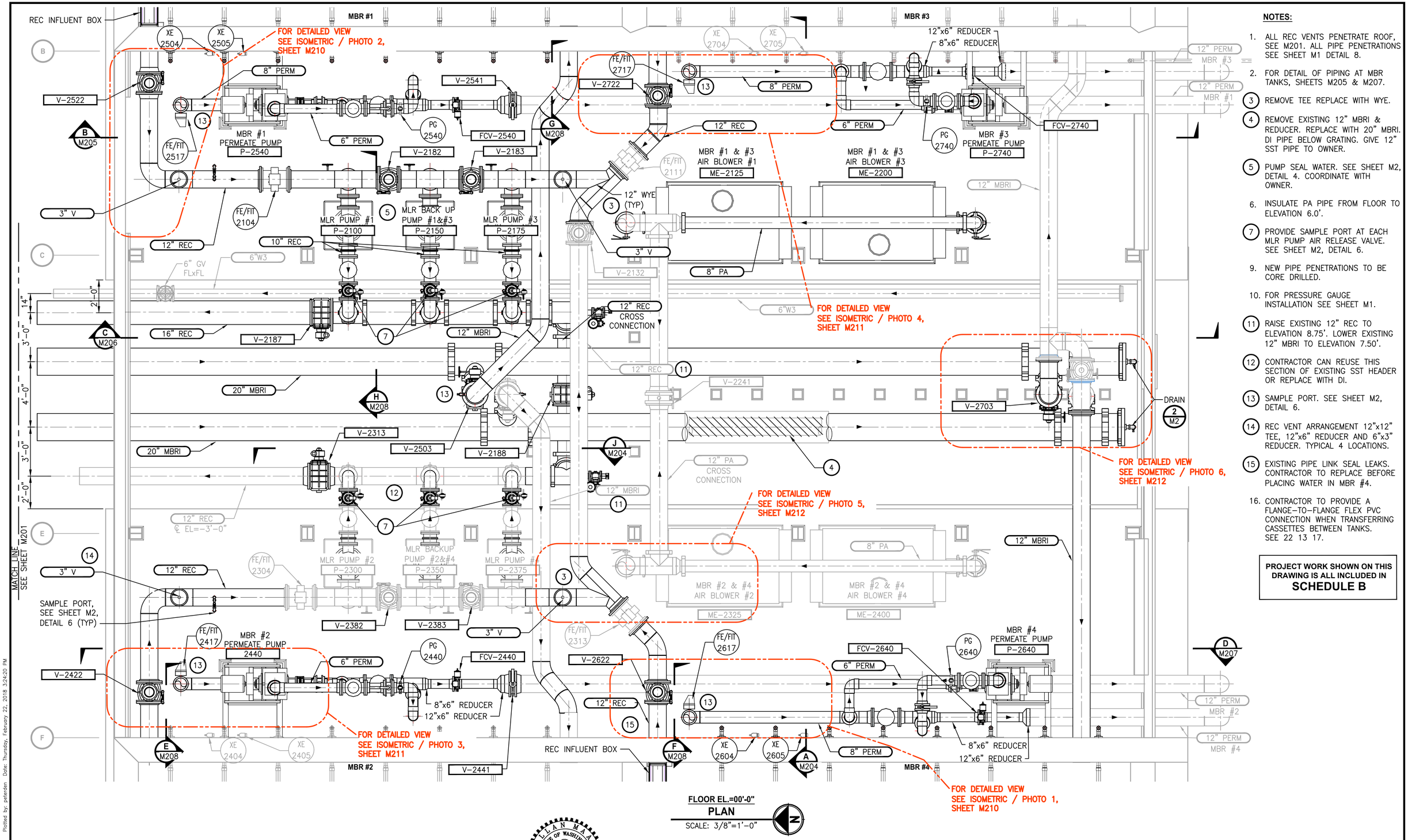

FLOOR EL.=00'-0"

PLAN

SCALE: 3/8"=1'-0"

NOTES:

1. ALL REC VENTS PENETRATE ROOF, SEE M201. ALL PIPE PENETRATIONS SEE SHEET M1 DETAIL 8.
2. FOR DETAIL OF PIPING AT MBR TANKS, SHEETS M205 & M207.
3. REMOVE TEE REPLACE WITH WYE.
4. REMOVE EXISTING 12" MBRI & REDUCER. REPLACE WITH 20" MBRI. DI PIPE BELOW GRATING. GIVE 12" SST PIPE TO OWNER.
5. PUMP SEAL WATER. SEE SHEET M2, DETAIL 4. COORDINATE WITH OWNER.
6. INSULATE PA PIPE FROM FLOOR TO ELEVATION 6.0'.
7. PROVIDE SAMPLE PORT AT EACH MLR PUMP AIR RELEASE VALVE. SEE SHEET M2, DETAIL 6.
9. NEW PIPE PENETRATIONS TO BE CORE DRILLED.
10. FOR PRESSURE GAUGE INSTALLATION SEE SHEET M1.
11. RAISE EXISTING 12" REC TO ELEVATION 8.75'. LOWER EXISTING 12" MBRI TO ELEVATION 7.50'.
12. CONTRACTOR CAN REUSE THIS SECTION OF EXISTING SST HEADER OR REPLACE WITH DI.
13. SAMPLE PORT. SEE SHEET M2, DETAIL 6.
14. REC VENT ARRANGEMENT 12"x12" TEE, 12"x6" REDUCER AND 6"x3" REDUCER. TYPICAL 4 LOCATIONS.
15. EXISTING PIPE LINK SEAL LEAKS. CONTRACTOR TO REPLACE BEFORE PLACING WATER IN MBR #4.
16. CONTRACTOR TO PROVIDE A FLANGE-TO-FLANGE FLEX PVC CONNECTION WHEN TRANSFERRING CASSETTES BETWEEN TANKS. SEE 22 13 17.

PROJECT WORK SHOWN ON THIS DRAWING IS ALL INCLUDED IN SCHEDULE B

	REVISIONS	DATE	BY

DESIGNED A. MAAS
DRAWN C. WEST
CHECKED L. ROSCOE
APPROVED B. BUNKER

ONE INCH AT FULL SCALE. IF NOT, SCALE ACCORDINGLY

FILE NAME PS1598102-M202.DWG
JOB No. 2161598102
DATE FEBRUARY 2018

ALLAN MAAS — STATE OF WASHINGTON — 27045 — REGISTERED PROFESSIONAL ENGINEER

FEBRUARY 23, 2018

Parametrix
ENGINEERING . PLANNING . ENVIRONMENTAL SCIENCES
1019 39TH AVENUE SE, SUITE 100 | PUYALLUP, WA 98374
P 253.604.6600
WWW.PARAMETRIX.COM

PROJECT NAME
THE CONSOLIDATED BOROUGH OF QUIL CEDA VILLAGE
MBR TREATMENT FACILITY UPGRADE
TULALIP, WASHINGTON

MBR BUILDING PLAN EL -5.00' - 11.00'

DRAWING NO. 37 OF 157

M202

File: PS1598102-M202.dwg Plotted by: peterden Date: Thursday, February 22, 2018 3:24:20 PM

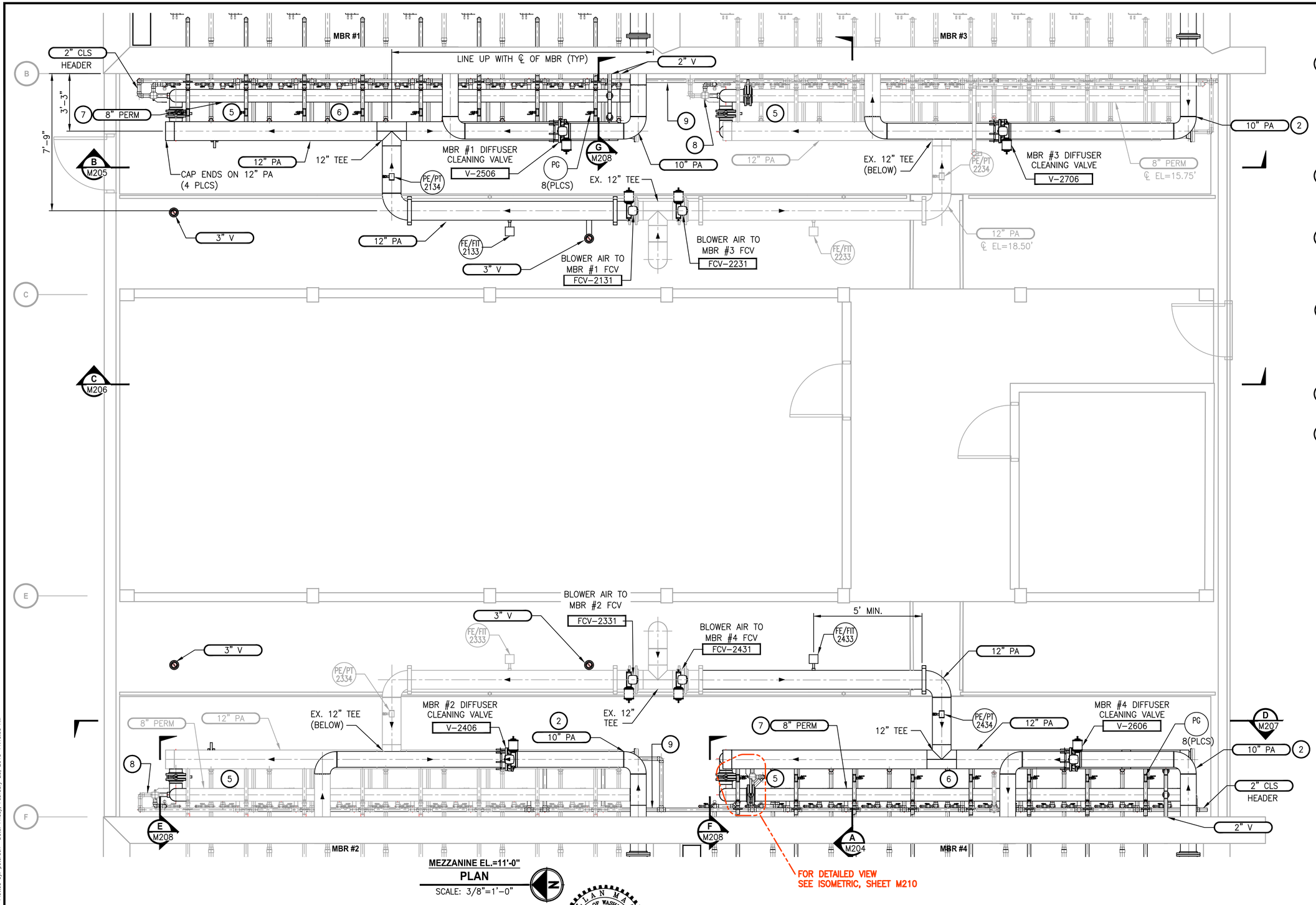

NOTES:

1. ALL CORE AND DRILLING PIPE PENETRATIONS, SEE SHEET M1 DETAIL 8.
2. REMOVE AND REPLACE EXISTING 10" PA AS SHOWN HERE AND SPEC SECTION 02 42 10.
3. INSULATE 2" PA ON MEZZANINE LEVEL FIRST 3' DOWN STREAM OF 12" PA HEADER.
4. PLUG ABANDONED PIPE PENETRATION. SEE SHEET M2, DETAIL 5.
5. TURBIDITY METERS. SEE P&ID'S AND ELECTRICAL. TOTAL OF 8. THREAD-O-LET TAPS TO BE PLACED AT LEAST 18" DOWNSTREAM OF LAST CASSETTE PERMEATE CONNECTION.
6. MBR #1 & #4 2" PERM AND 2" PA AND 2" CLS TO BE CONSTRUCTED AND ROUTED THE SAME AS EXISTING MBR #2 AND #3. CONTRACTOR RESPONSIBLE FOR FIELD MEASUREMENTS AND COORDINATION.
7. 8" PERM HEADERS. 1 FOR UPPER CASSETTE AND 1 FOR LOWER CASSETTE AT BOTH MBRS #1 & #4. CENTERLINE ELEVATION 15.75'. INSTALL 2" PERM VENT ON EACH HEADER WITH PENETRATION TO BRR AT ELEVATION 24.50'.
8. CONNECTION BETWEEN 2" PERM 2" CLS AND LOWER CASSETTE TO BE RE ROUTED AS SHOWN.
9. NEW CLS HEADER TO MBRI.
10. FOR DETAIL OF PIPING AT MBR TANKS, SHEETS M205 & M207.
11. WHEN SHOWING, PA & REC PIPE PENETRATING MBR TANK WALLS MUST STOP FLUSH WITH INTERIOR WALL CONCRETE.

PROJECT WORK SHOWN ON THIS DRAWING IS ALL INCLUDED IN SCHEDULE B

MEZZANINE EL.=11'-0"

PLAN

SCALE: 3/8"=1'-0"

	REVISIONS	DATE	BY

DESIGNED A. MAAS
DRAWN C. WEST
CHECKED L. ROSCOE
APPROVED B. BUNKER

ONE INCH AT FULL SCALE. IF NOT, SCALE ACCORDINGLY
FILE NAME PS1598102-M203.DWG
JOB No. 2161598102
DATE FEBRUARY 2018

ALLAN MAAS STATE OF WASHINGTON 27045 REGISTERED PROFESSIONAL ENGINEER
FEBRUARY 23, 2018

Parametrix
ENGINEERING . PLANNING . ENVIRONMENTAL SCIENCES
1019 39TH AVENUE SE, SUITE 100 | PUYALLUP, WA 98374
P 253.604.6600
WWW.PARAMETRIX.COM

PROJECT NAME
THE CONSOLIDATED BOROUGH OF QUIL CEDA VILLAGE
MBR TREATMENT FACILITY UPGRADE
TULALIP, WASHINGTON

MBR BUILDING PLAN EL 11.00' - 26.00'

DRAWING NO. 38 OF 157
M203

File: PS1598102-M203.dwg Plotted by: peterden Date: Friday, February 23, 2018 11:13:35 AM

PROJECT WORK SHOWN ON THIS DRAWING IS ALL INCLUDED IN SCHEDULE B

NOTES:

1. ALL PIPE PENETRATIONS THROUGH WALLS AND SLABS REQUIRE CORE DRILL AND MECHANICAL SEALS. SEE SHEET M1 DETAIL 8.
2. PROVIDE ADEQUATE CLEARANCE FOR 20" MBRI ABOVE
3. PRESSURE (0–15 PSI) GAUGE AT EACH 2" PA CASSETTE HEADER. 16 TOTAL FOR MBR 1 & 4. SEE SHEET M1 DETAIL 11.
4. 2" PERM VENT FOR MBR 1. ALSO REQUIRED FOR MBR 4.
5. CONTRACTOR SHALL LOCATE UNION FOR EASE OF CONSTRUCTION.
6. USE EXISTING MLR PUMP SST ARRANGEMENT BELOW EL. 0.0' OR CONSTRUCT NEW WITH DI.

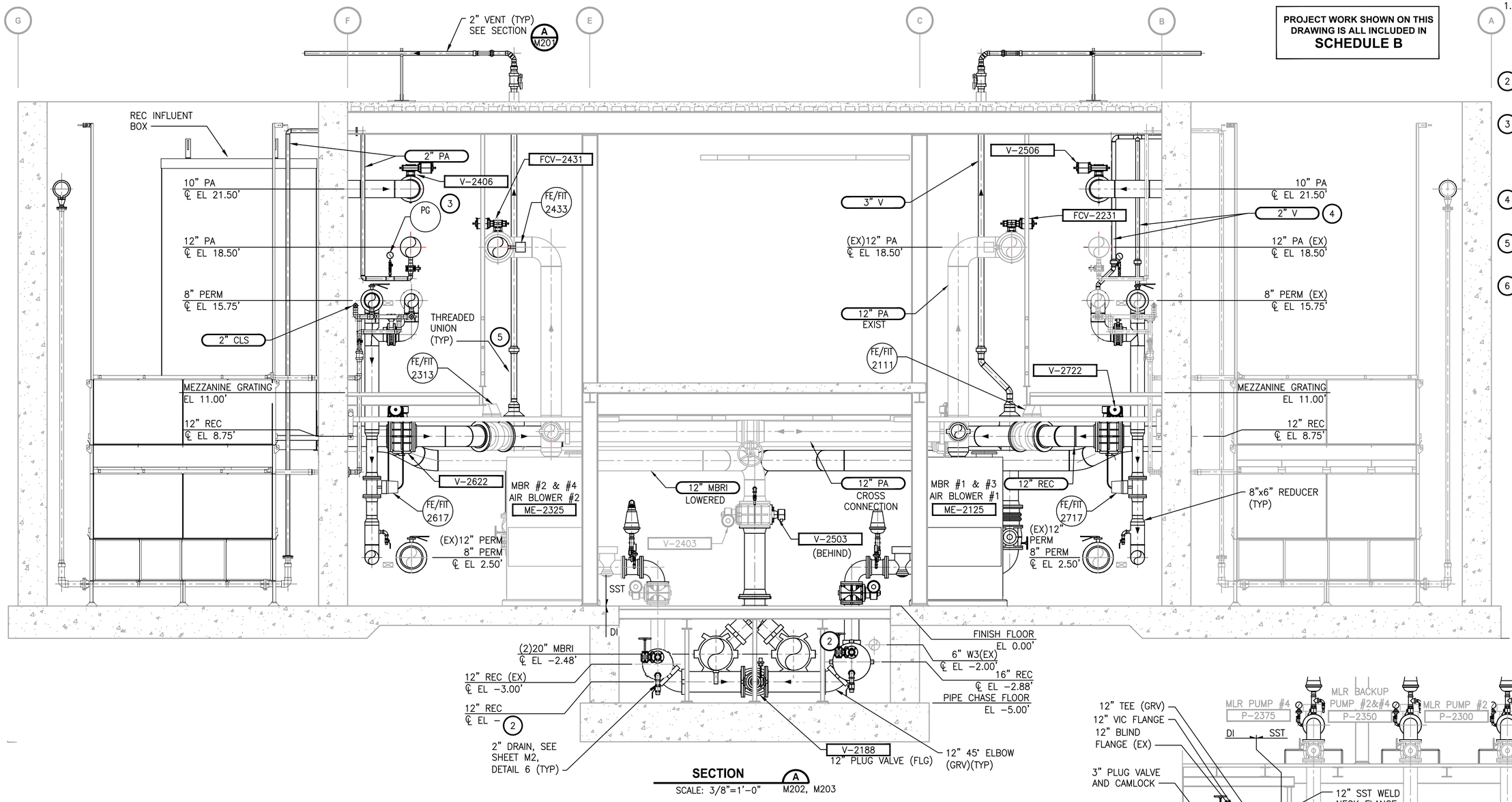

SECTION A — SCALE: 3/8"=1'-0" — M202, M203

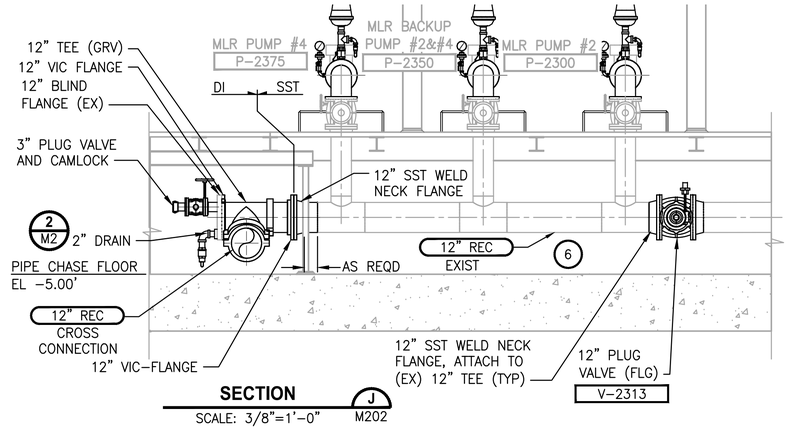

SECTION J — SCALE: 3/8"=1'-0" — M202

	REVISIONS	DATE	BY

DESIGNED A. MAAS
DRAWN C. WEST
CHECKED L. ROSCOE
APPROVED B. BUNKER

ONE INCH AT FULL SCALE. IF NOT, SCALE ACCORDINGLY

FILE NAME: PS1598102-M204.DWG
JOB No. 2161598102
DATE FEBRUARY 2018

ALLAN MAAS — STATE OF WASHINGTON — 27045 — REGISTERED PROFESSIONAL ENGINEER

FEBRUARY 23, 2018

Parametrix
ENGINEERING . PLANNING . ENVIRONMENTAL SCIENCES
1019 39TH AVENUE SE, SUITE 100 | PUYALLUP, WA 98374
P 253.604.6600
WWW.PARAMETRIX.COM

PROJECT NAME
THE CONSOLIDATED BOROUGH OF QUIL CEDA VILLAGE MBR TREATMENT FACILITY UPGRADE
TULALIP, WASHINGTON

MBR BUILDING SECTION A

DRAWING NO. 39 OF 157
M204

File: PS1598102-M204.dwg Plotted by: peterden Date: Thursday, February 22, 2018 3:04:16 PM

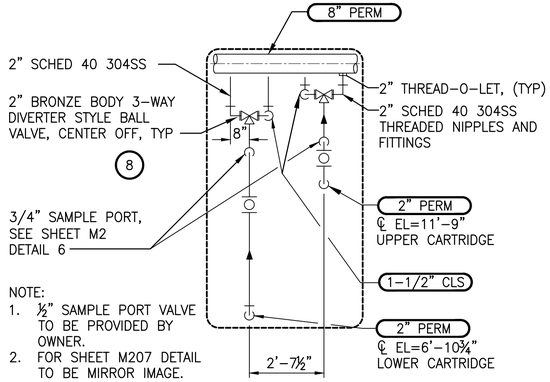

DETAIL 1 — SCALE: NONE — M205, M207

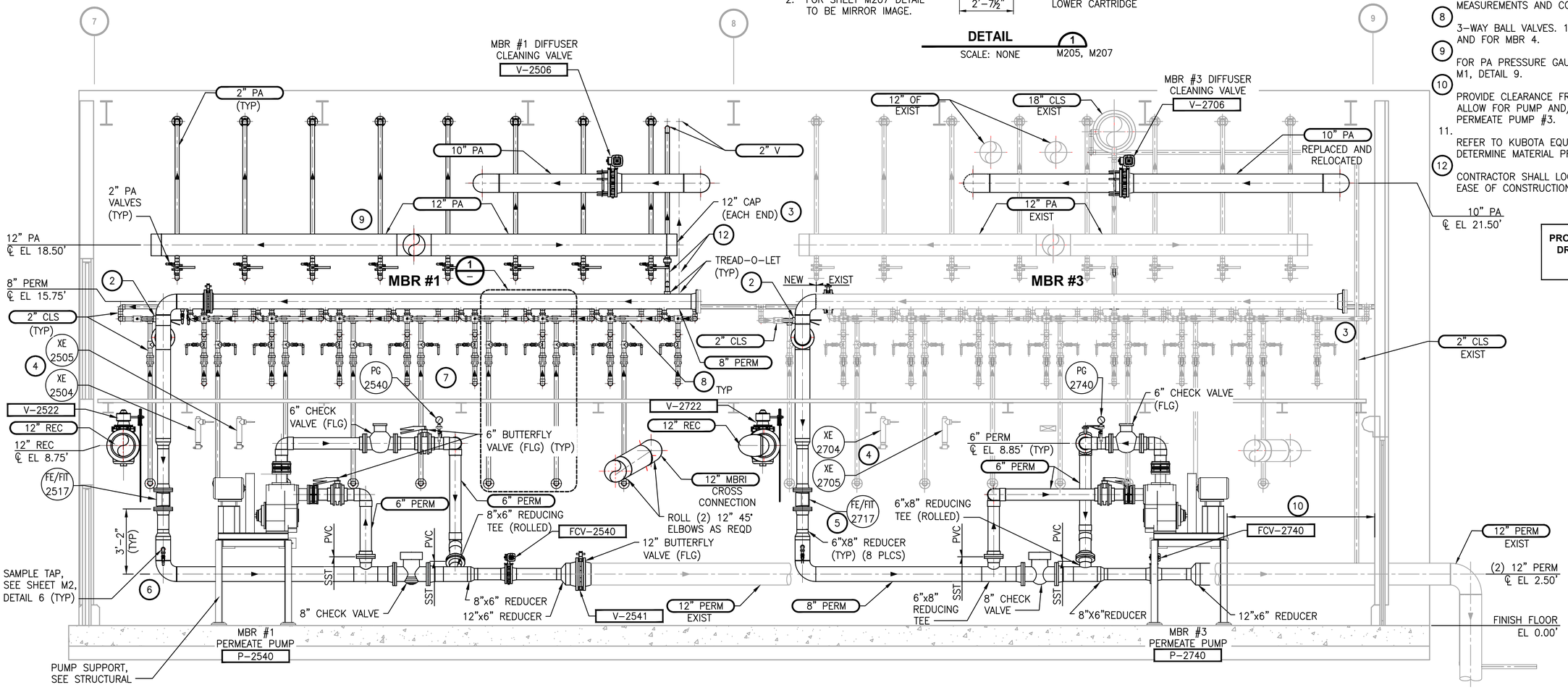

MBR SECTIONS #1 & #3

SECTION B — SCALE: 3/8"=1'-0" — M202, M203

NOTES:

1. ALL PIPE PENETRATIONS THROUGH WALLS AND SLABS REQUIRE MECHANICAL SEALS. SEE SHEET M1, DETAIL 8.
2. INSTALL 2" THREAD-O-LET IN LOCATION SHOWN FOR 2" CLS CONNECTION. COORDINATE WITH OWNER TO FLUSH CLS TO REMOVE HAZARDOUS SOLUTION FROM PIPE BEFORE DOING ANY WORK.
3. REMOVE EXISTING VERTICAL 8" PERM. CAP EXISTING PERM AT EACH CUT. SEE DEMO PHOTOS. GIVE 8" SST DISCARD PIPE TO OWNER.
4. TWO TURBIDITY METERS FOR EACH MBR. SEE P&ID'S.
5. RELOCATED VERTICAL 8" PERM AND FLOW METER.
6. REPLACE EXISTING 12" PERM AS SHOWN.
7. MBR 1 & 4, 2" PERM, PA AND CLS TO BE CONSTRUCTED AND ROUTED THE SAME AS EXISTING MBR 3. CONTRACTOR RESPONSIBLE FOR FIELD MEASUREMENTS AND COOR5DINATION.
8. 3-WAY BALL VALVES. 16 REQUIRED EACH FOR MBR 1 AND FOR MBR 4.
9. FOR PA PRESSURE GAUGES INSTALLATION SEE SHEET M1, DETAIL 9.
10. PROVIDE CLEARANCE FROM 12" MBRI PIPE ABOVE TO ALLOW FOR PUMP AND/OR MOTOR REMOVAL FOR PERMEATE PUMP #3.
11. REFER TO KUBOTA EQUIPMENT LIST AND DRAWINGS TO DETERMINE MATERIAL PROVIDED BY THEM.
12. CONTRACTOR SHALL LOCATE THREADED UNION FOR EASE OF CONSTRUCTION.

PROJECT WORK SHOWN ON THIS DRAWING IS ALL INCLUDED IN SCHEDULE B

	REVISIONS	DATE	BY

DESIGNED A. MAAS
DRAWN C. WEST
CHECKED L. ROSCOE
APPROVED B. BUNKER

ONE INCH AT FULL SCALE. IF NOT, SCALE ACCORDINGLY
FILE NAME PS1598102-M205.DWG
JOB No. 2161598102
DATE FEBRUARY 2018

ALAN MAAS — STATE OF WASHINGTON — 27045 — REGISTERED PROFESSIONAL ENGINEER
FEBRUARY 23, 2018

Parametrix
ENGINEERING . PLANNING . ENVIRONMENTAL SCIENCES
1019 39TH AVENUE SE, SUITE 100 | PUYALLUP, WA 98374
P 253.604.6600
WWW.PARAMETRIX.COM

PROJECT NAME
THE CONSOLIDATED BOROUGH OF QUIL CEDA VILLAGE
MBR TREATMENT FACILITY UPGRADE
TULALIP, WASHINGTON

MBR BUILDING SECTION B

DRAWING NO. 40 OF 157
M205

File: PS1598102-M205.dwg Plotted by: peterden Date: Thursday, February 22, 2018 3:26:17 PM

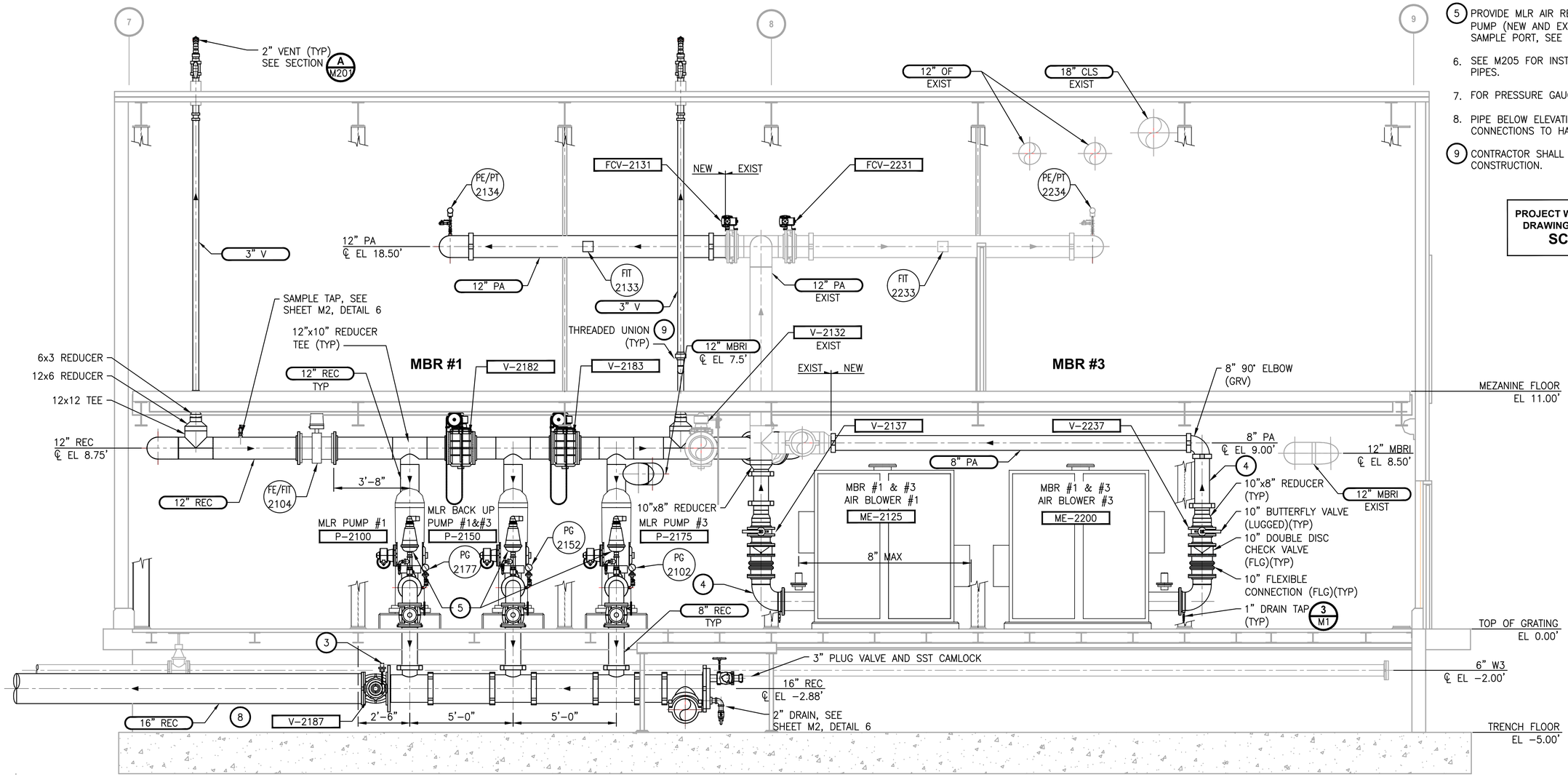

SECTION C
SCALE: 3/8"=1'-0" M202, M203

NOTES:

1. ALL PIPE PENETRATIONS THROUGH WALLS AND SLABS REQUIRE MECHANICAL SEALS. SEE SHEET M1, DETAIL 8.
2. PLUG ALL UNUSED OR ABANDONED PIPE HOLES PER DETAIL 5 ON SHEET M2.
3. ALL VALVES BELOW GRATING (EL 0.00') SHALL BE NUT OPERATED AND CONTRACTOR TO PROVIDE OPENINGS FOR NUT CLEARANCE.
4. INSULATE AND JACKET ALL PROCESS AIR PIPING BELOW ELEVATION 8.00', SEE SPECIFICATIONS. PIPE JOINT GASKETS TO BE RATED FOR 275° F.
5. PROVIDE MLR AIR RELEASE VALVES AT EACH MLR PUMP (NEW AND EXISTING, 6 PLCS). PROVIDE SAMPLE PORT, SEE SHEET M2 DETAIL 6.
6. SEE M205 FOR INSTRUCTIONS ON PERM, CLS, & PA PIPES.
7. FOR PRESSURE GAUGE INSTALLATION SEE SHEET M1.
8. PIPE BELOW ELEVATION 0.00' TO BE DI. DI TO SST CONNECTIONS TO HAVE DIELECTRIC ISOLATION.
9. CONTRACTOR SHALL LOCATE UNION FOR EASE OF CONSTRUCTION.

PROJECT WORK SHOWN ON THIS DRAWING IS ALL INCLUDED IN SCHEDULE B

	REVISIONS	DATE	BY

DESIGNED A. MAAS
DRAWN C. WEST
CHECKED L. ROSCOE
APPROVED B. BUNKER

ONE INCH AT FULL SCALE. IF NOT, SCALE ACCORDINGLY
FILE NAME PS1598102-M206.DWG
JOB No. 2161598102
DATE FEBRUARY 2018

ALLAN MAAS STATE OF WASHINGTON 27045 REGISTERED PROFESSIONAL ENGINEER
FEBRUARY 23, 2018

Parametrix
ENGINEERING . PLANNING . ENVIRONMENTAL SCIENCES
1019 39TH AVENUE SE, SUITE 100 | PUYALLUP, WA 98374
P 253.604.6600
WWW.PARAMETRIX.COM

PROJECT NAME
THE CONSOLIDATED BOROUGH OF QUIL CEDA VILLAGE
MBR TREATMENT FACILITY UPGRADE
TULALIP, WASHINGTON

MBR BUILDING SECTION C

DRAWING NO. 41 OF 157
M206

File: PS1598102-M206.dwg Plotted by: peterden Date: Thursday, February 22, 2018 3:40:10 PM

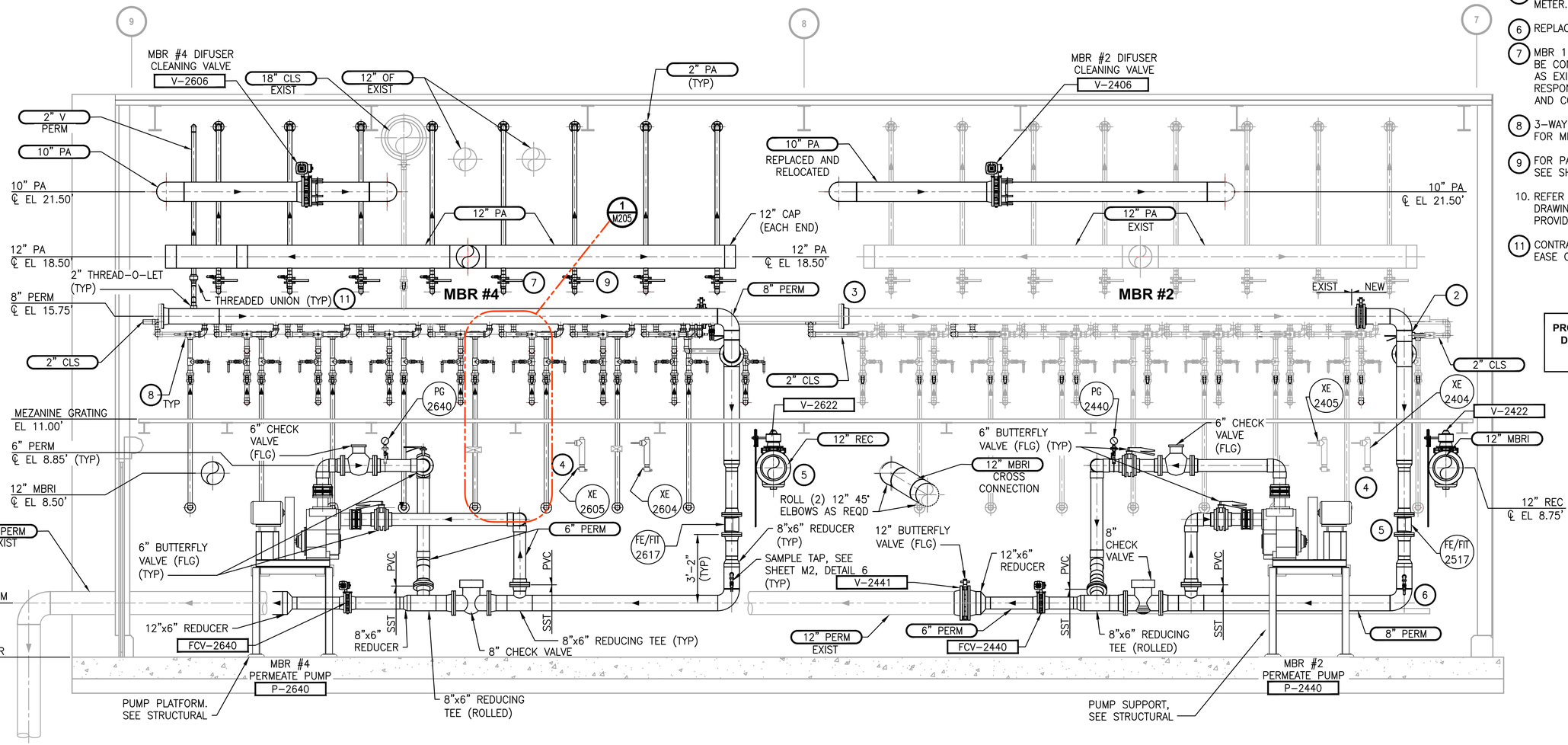

MBR #2 & #4
SECTION D
SCALE: 3/8"=1'-0" M202, M203

NOTES:

1. ALL PIPE PENETRATIONS THROUGH WALLS AND SLABS REQUIRE CORE DRILLING AND MECHANICAL SEALS. SEE SHEET M1, DETAIL 8. NO PIPE CORE DRILLS HAVE BEEN MADE TO MBR #4.
2. INSTALL 2" THREAD-O-LET IN LOCATION SHOWN FOR 2" CLS CONNECTION.
3. REMOVE EXISTING VERTICAL 8" PERM. CAP EXISTING PERM AT EACH CUT. SEE DEMO PHOTOS.
4. TWO TURBIDITY METERS FOR EACH MBR. SEE P&ID'S. MBR #1 & #3 EACH REQUIRE RELOCATION OF 1 TURBIDITY METER.
5. RELOCATED VERTICAL 8" PERM AND FLOW METER.
6. REPLACE EXISTING 12" PERM AS SHOWN.
7. MBR 1 & 4, 2" PERM, PA AND CLS TO BE CONSTRUCTED AND ROUTED THE SAME AS EXISTING MBR 2 & 3. CONTRACTOR RESPONSIBLE FOR FIELD MEASUREMENTS AND COOR5DINATION.
8. 3-WAY BALL VALVES. 16 REQUIRED EACH FOR MBR 1 AND FOR MBR 4.
9. FOR PA PRESSURE GAUGES INSTALLATION SEE SHEET M1, DETAIL 9.
10. REFER TO KUBOTA EQUIPMENT LIST AND DRAWINGS TO DETERMINE MATERIAL PROVIDED BY THEM.
11. CONTRACTOR SHALL LOCATE UNION FOR EASE OF CONSTRUCTION.

PROJECT WORK SHOWN ON THIS DRAWING IS ALL INCLUDED IN SCHEDULE B

	REVISIONS	DATE	BY

DESIGNED A. MAAS
DRAWN C. WEST
CHECKED L. ROSCOE
APPROVED B. BUNKER

ONE INCH AT FULL SCALE. IF NOT, SCALE ACCORDINGLY
FILE NAME PS1598102-M207.DWG
JOB No. 2161598102
DATE FEBRUARY 2018

ALAN MAAS — STATE OF WASHINGTON — 27045 — REGISTERED PROFESSIONAL ENGINEER
FEBRUARY 23, 2018

Parametrix
ENGINEERING . PLANNING . ENVIRONMENTAL SCIENCES
1019 39TH AVENUE SE, SUITE 100 | PUYALLUP, WA 98374
P 253.604.6600
WWW.PARAMETRIX.COM

PROJECT NAME
THE CONSOLIDATED BOROUGH OF QUIL CEDA VILLAGE
MBR TREATMENT FACILITY UPGRADE
TULALIP, WASHINGTON

MBR BUILDING SECTION D

DRAWING NO. 42 OF 157
M207

File: PS1598102-M207.dwg Plotted by: peterden Date: Thursday, February 22, 2018 3:48:48 PM

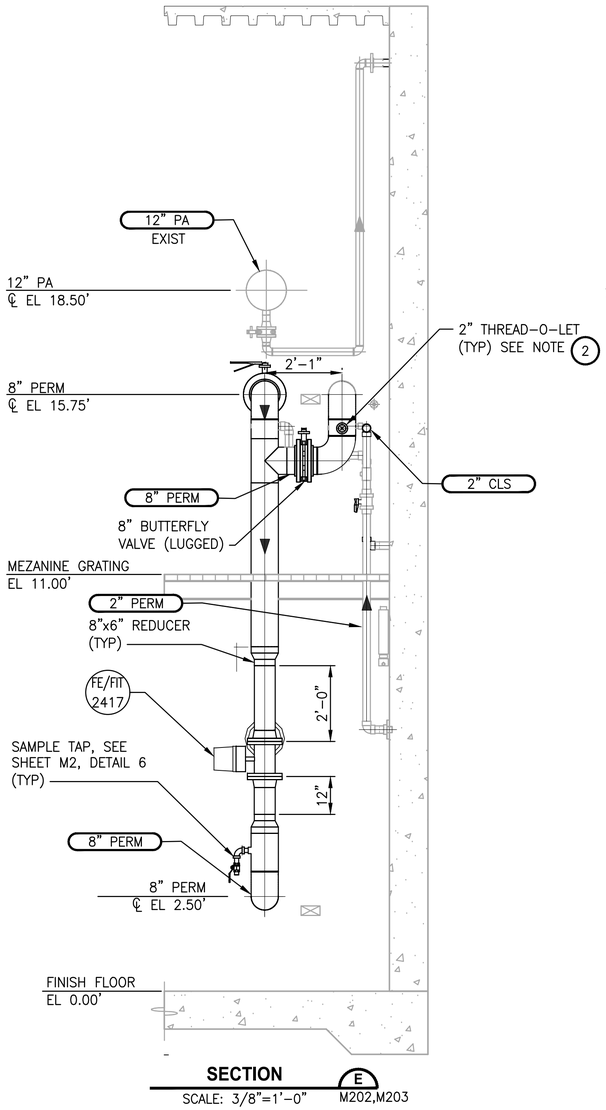

SECTION E M202,M203

SCALE: 3/8"=1'-0"

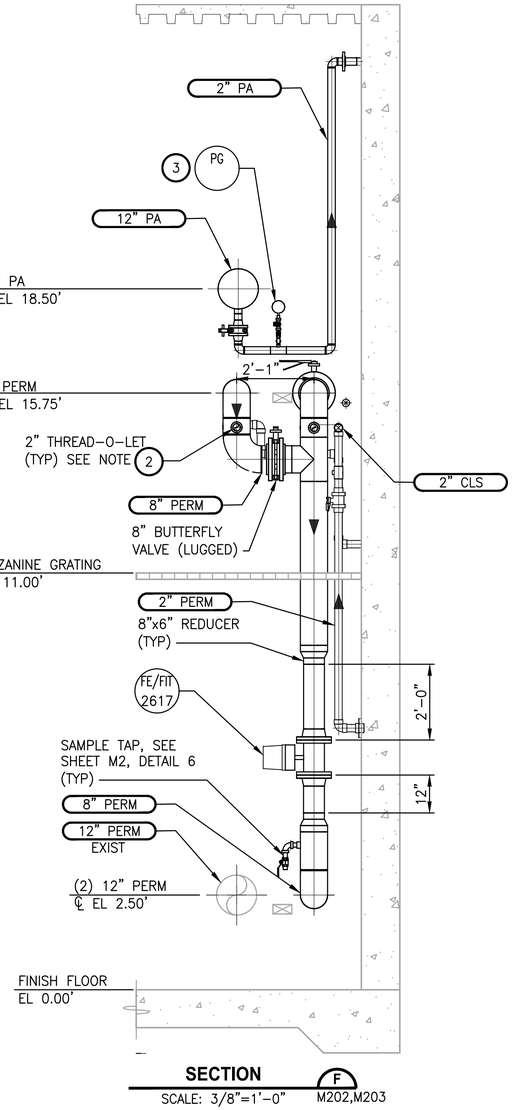

SECTION F M202,M203

SCALE: 3/8"=1'-0"

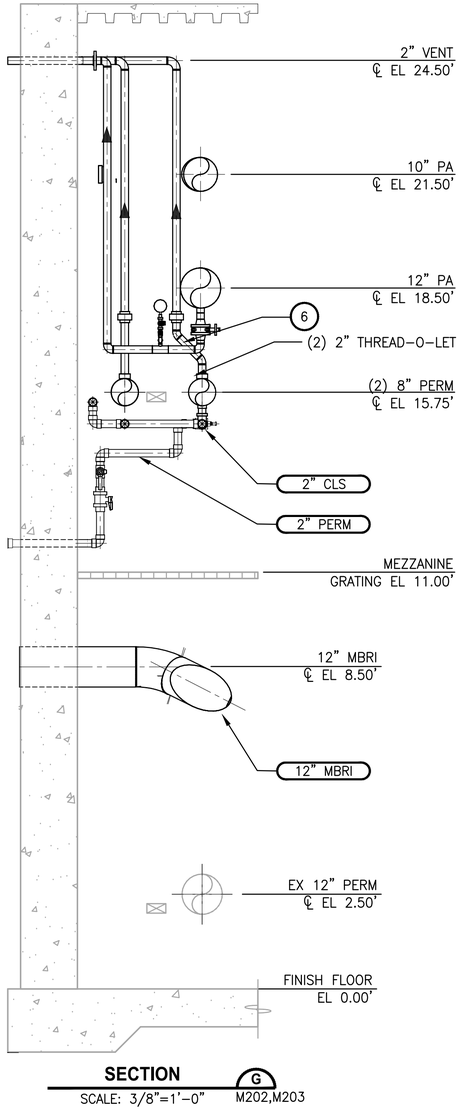

SECTION G M202,M203

SCALE: 3/8"=1'-0"

NOTES:

1. ALL PIPE PENETRATIONS THROUGH WALLS AND SLABS REQUIRE MECHANICAL SEALS. SEE SHEET M1, DETAIL 8.

(2) INSTALL 2" THREAD-O-LET IN LOCATION SHOWN FOR 2" CLS CONNECTION.

(3) PROVIDE PRESSURE GAUGE ON EACH 2" PA PIPE TO MBR 1 & 3. TYPICAL 16. FOR PRESSURE GAUGE INSTALLATION SEE SHEET M1, DETAIL 6.

(4) PUMP SEAL WATER. SEE SHEET M2, DETAIL 4.

(5) CONTRACTOR TO FIELD ROUTE AIR RELEASE VALVE PVC DRAIN TO PIPE GALLERY PER MANUFACTURERS RECOMMENDATIONS.

(6) CONTRACTOR SHALL LOCATE THREADED UNION FOR EASE OF CONSTRUCTION.

PROJECT WORK SHOWN ON THIS DRAWING IS ALL INCLUDED IN
SCHEDULE B

MLR PUMP AND VALVE SCHEDULE

	(1)	(2)	(3)	(4)	(5)
PUMP NAME	**PUMP NO.**	**PLUG VALVE**	**CHECK VALVE**	**PLUG VALVE**	**AIR RELIEF VALVE**
MLR PUMP #1	P-2100	V-2105	V-2107	V-2108	ARV-2100
MLE PUMP BACK-UP RECYCLE PUMP #1 & #3	P-2150	V-2180	V-2179	V-2178	ARV-2150
MLR PUMP #3	P-2175	V-2184	V-2185	V-2186	ARV-2175
MLR PUMP #2 (EXIST)	P-2300	V-2305	V-2307	V-2308	ARV-2300
MLR BACK-UP RECYCLE PUMP #2 & #4 (EXIST)	P-2350	V-2380	V-2379	V-2378	ARV-2350
MLR PUMP #4 (EXIST)	P-2375	V-2384	V-2385	V-2386	ARV-2375

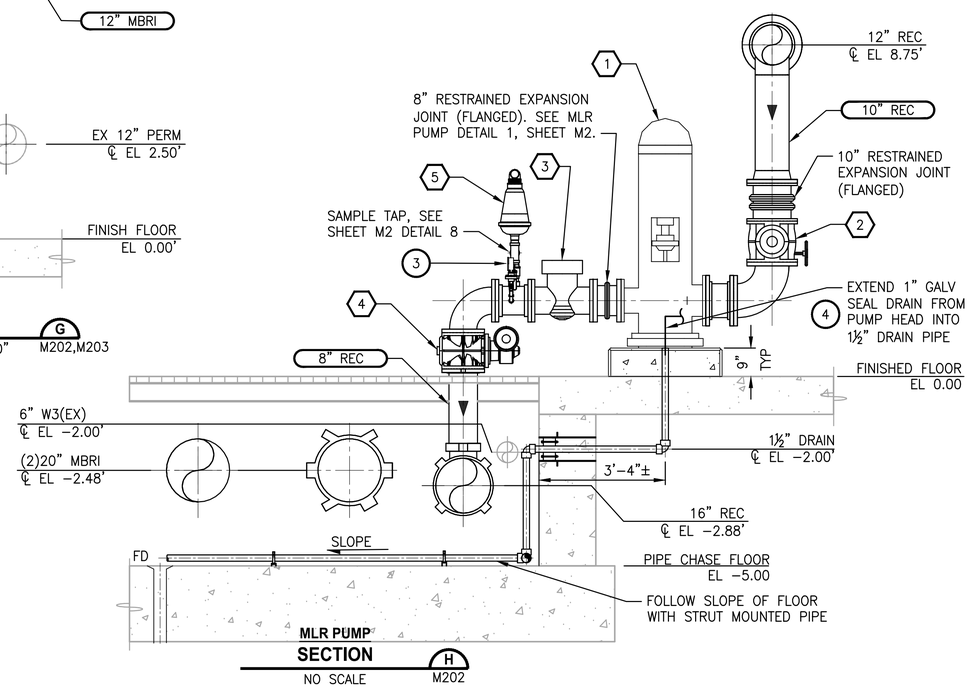

SECTION H M202

NO SCALE

	REVISIONS	DATE	BY

DESIGNED A. MAAS
DRAWN C. WEST
CHECKED L. ROSCOE
APPROVED B. BUNKER

ONE INCH AT FULL SCALE. IF NOT, SCALE ACCORDINGLY

FILE NAME PS1598102-M208.DWG
JOB No. 2161598102
DATE FEBRUARY 2018

ALLAN MAAS · STATE OF WASHINGTON · 27045 · REGISTERED PROFESSIONAL ENGINEER

FEBRUARY 23, 2018

Parametrix
ENGINEERING . PLANNING . ENVIRONMENTAL SCIENCES
1019 39TH AVENUE SE, SUITE 100 | PUYALLUP, WA 98374
P.253.604.6600
WWW.PARAMETRIX.COM

PROJECT NAME
THE CONSOLIDATED BOROUGH OF QUIL CEDA VILLAGE MBR TREATMENT FACILITY UPGRADE
TULALIP, WASHINGTON

MBR BUILDING SECTIONS

DRAWING NO. 43 OF 157

M208

File: PS1598102-M208.dwg Plotted by: peterden Date: Thursday, February 22, 2018 3:49:38 PM

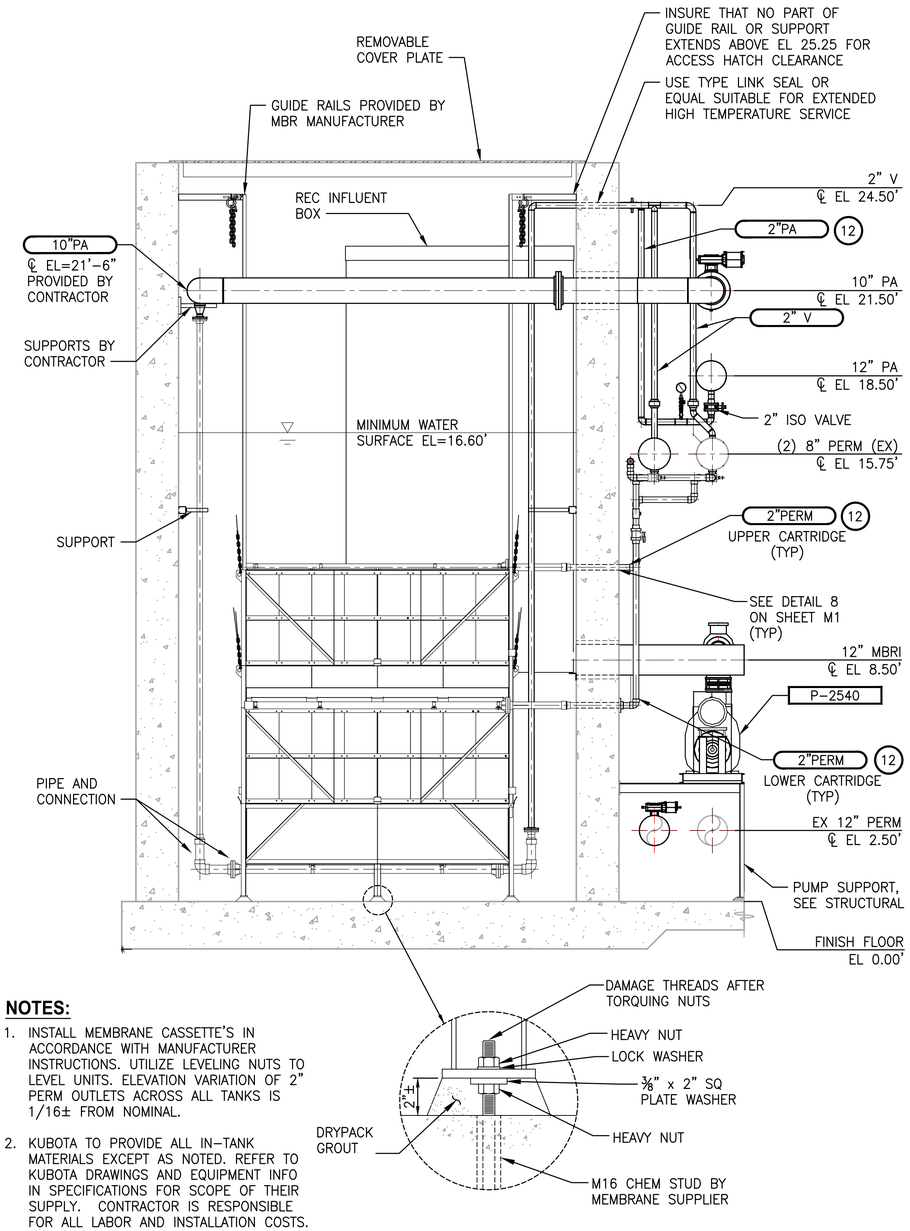

NOTES:

1. INSTALL MEMBRANE CASSETTE'S IN ACCORDANCE WITH MANUFACTURER INSTRUCTIONS. UTILIZE LEVELING NUTS TO LEVEL UNITS. ELEVATION VARIATION OF 2" PERM OUTLETS ACROSS ALL TANKS IS 1/16± FROM NOMINAL.
2. KUBOTA TO PROVIDE ALL IN-TANK MATERIALS EXCEPT AS NOTED. REFER TO KUBOTA DRAWINGS AND EQUIPMENT INFO IN SPECIFICATIONS FOR SCOPE OF THEIR SUPPLY. CONTRACTOR IS RESPONSIBLE FOR ALL LABOR AND INSTALLATION COSTS.

SECTION A–
3/8"=1'-0"

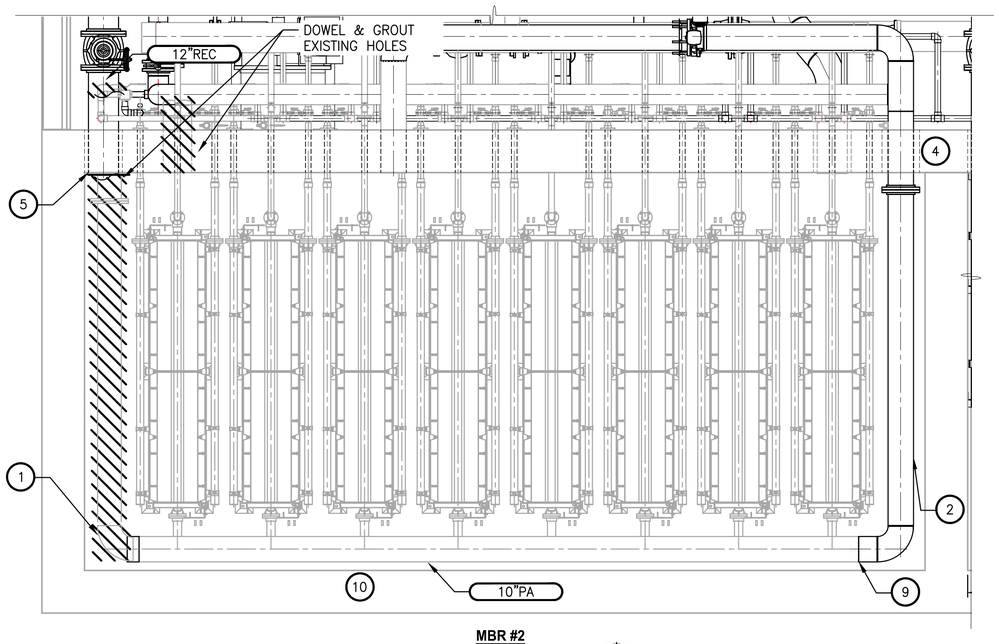

MBR #2
PARTIAL PLAN
3/8"=1'-0"

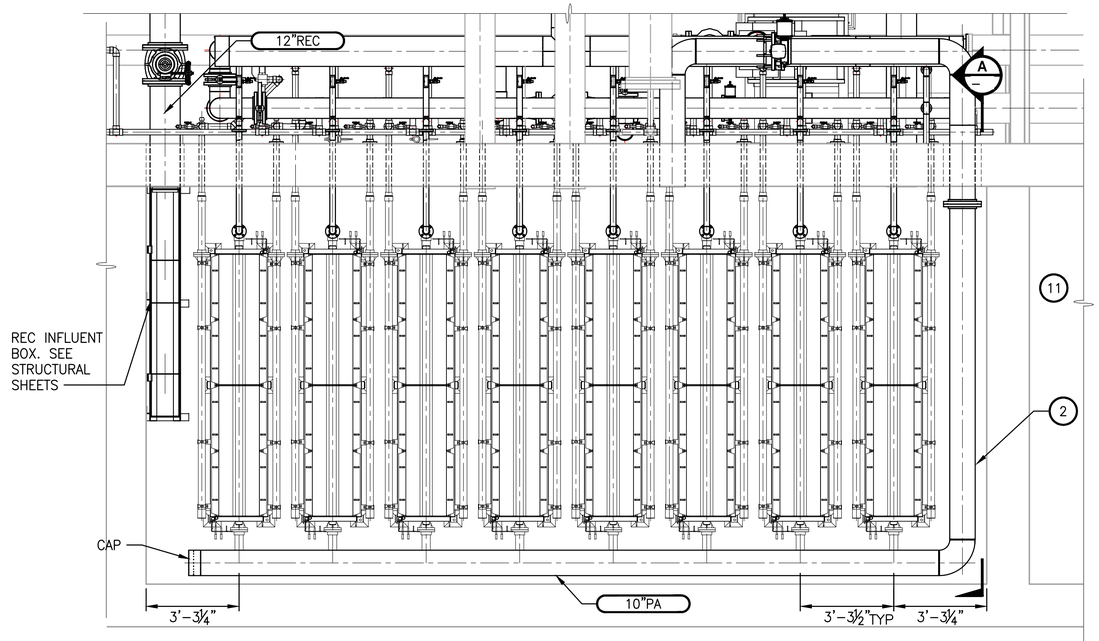

MBR #4
PARTIAL PLAN
3/8"=1'-0"

NOTES:

1. MBR #2 & #3 CUT PIPE, AND WELD ON CAP. REFER TO M206. MOVE PIPE TO SOUTH WALL.
2. DIFFUSER CLEANING HEADER TO EXIT MBR ON SOUTH WALL OF ALL FOUR MBR'S. CONTRACTOR PROVIDED.
3. FINAL ARRANGEMENT IS SIMILAR FOR ALL 4 MBR'S.
4. WALL PENETRATION TYP. SEE SHEET M1 DETAIL 8.
5. PIPE STUB MUST NOT PROJECT INTO TANK.
6. WHERE EXISTING PIPES ARE REMOVED AT WALL, FILL PER DETAIL 5 SHEET M2.
7. SEE SHEETS M202 TO M206 FOR CONTINUATION OF PIPES INTO MBR BUILDING.
8. 10" PA PIPE AND SUPPORTS PROVIDED BY CONTRACTOR.
9. RELOCATED 10" PA TO BE WELDED TO EXISTING PIPE.
10. CONSTRUCTION FOR MBR #3 IS THE SAME. SEE SHEET M203 TO M207 FOR PIPE DETAILS.
11. NOTES 2, 4, 5, 6, 7, AND 8 ABOVE ALSO APPLY TO THIS PLAN. MBR #1 REQUIRES THE SAME CONSTRUCTION. SEE SHEETS M203 TO M206 FOR MORE DETAILS.
12. MBR #1 & #4 2" PERM AND 2" PA AND 2" CLS TO BE CONSTRUCTED AND ROUTED THE SAME AS EXISTING MBR #2 AND #3. CONTRACTOR RESPONSIBLE FOR FIELD MEASUREMENTS AND COORDINATION.

PROJECT WORK SHOWN ON THIS DRAWING IS ALL INCLUDED IN SCHEDULE B

	REVISIONS	DATE	BY

DESIGNED A. MAAS
DRAWN D. PETERSON
CHECKED L. ROSCOE
APPROVED B. BUNKER

ONE INCH AT FULL SCALE. IF NOT, SCALE ACCORDINGLY
FILE NAME PS1598102_M209.DWG
JOB No. 2161598102
DATE FEBRUARY 2018

ALLAN MAAS — STATE OF WASHINGTON — 27045 — REGISTERED PROFESSIONAL ENGINEER
FEBRUARY 23, 2018

Parametrix
ENGINEERING . PLANNING . ENVIRONMENTAL SCIENCES
1019 39TH AVENUE SE, SUITE 100 | PUYALLUP, WA 98374
P 253.604.6600
WWW.PARAMETRIX.COM

PROJECT NAME
THE CONSOLIDATED BOROUGH OF QUIL CEDA VILLAGE
MBR TREATMENT FACILITY UPGRADE
TULALIP, WASHINGTON

MBR BUILDING SECTION

DRAWING NO. 44 OF 157
M209

File: PS1598102_M209.dwg Plotted by: peterden Date: Thursday, February 22, 2018 4:04:43 PM

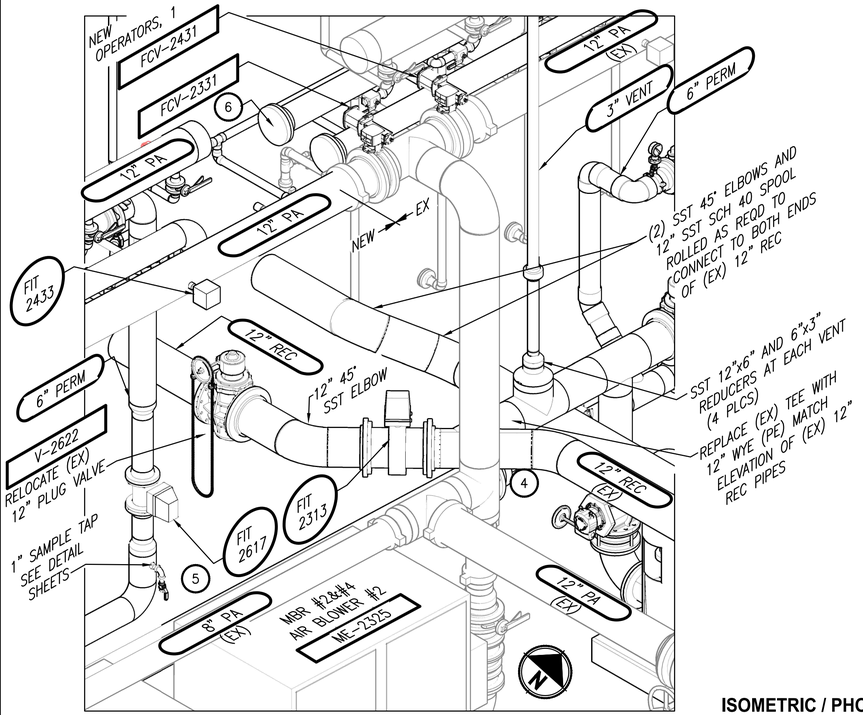

ISOMETRIC / PHOTO 1 M202
NTS

NOTES:

1. ISOMETRIC DETAILS ARE NOT DRAW TO SCALE CONTRACTOR SHALL VERIFY DIMENSIONS, ELEVATIONS AND LOCATIONS PRIOR TO CONSTRUCTION.
2. OBJECTS SCREENED IN ISOMETRIC VIEWS ARE EXISTING UNMODIFIED FEATURES.

(3) CUT AND REMOVE 12" REC. CUT AND RELOCATE 12" REC PIPE INTO MBR 4 2'-9" NORTH AND 6" HIGHER AS SHOWN ON ISOMETRIC AND MECHANICAL DRAWINGS. REPLACE 12" PLUG VALVE IN-KIND.

(4) NOTE THAT EXISTING VERTICAL TEE AT FLOW METER SHALL BE REMOVED AND REPLACED WITH HORIZONTAL WYE.

(5) NOTE MODIFICATION OF EXISTING 8" PERM. SEE MECHANICAL DRAWINGS AND DEMO PHOTOS FROM MORE INFORMATION.

(6) CUT EXISTING 8" PERM AND WELD CAPS AT MEZZANINE AND FLOOR LEVELS.

(7) RETURN REMOVED VALVE AND OPERATOR TO OWNER.

(8) REPLACE 12" PERM WITH 8" PERM AS SHOWN ON MECHANICAL.

(9) REMOVE ROOL-UP DOOR AND REPLACE WITH DOUBLE DOOR. SEE STRUCTURAL SHEET S201.

(10) FILL HOLE PER DETAIL 5, SHEET M2. MOVE CONDUIT.

LEGEND:

DEMOLITION OR REMOVAL

MOVE AND RELOCATE

PROJECT WORK SHOWN ON THIS DRAWING IS ALL INCLUDED IN SCHEDULE B

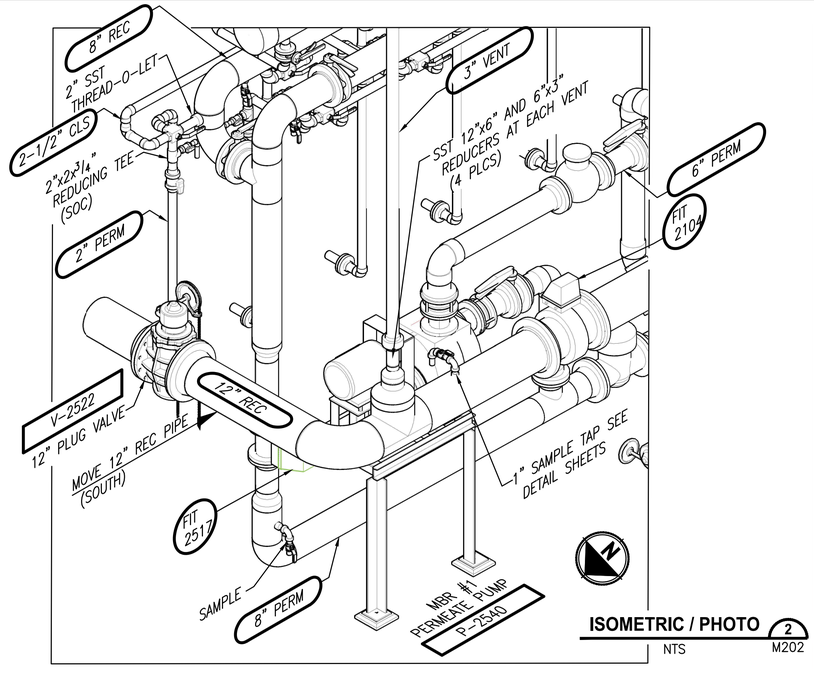

ISOMETRIC / PHOTO 2 M202
NTS

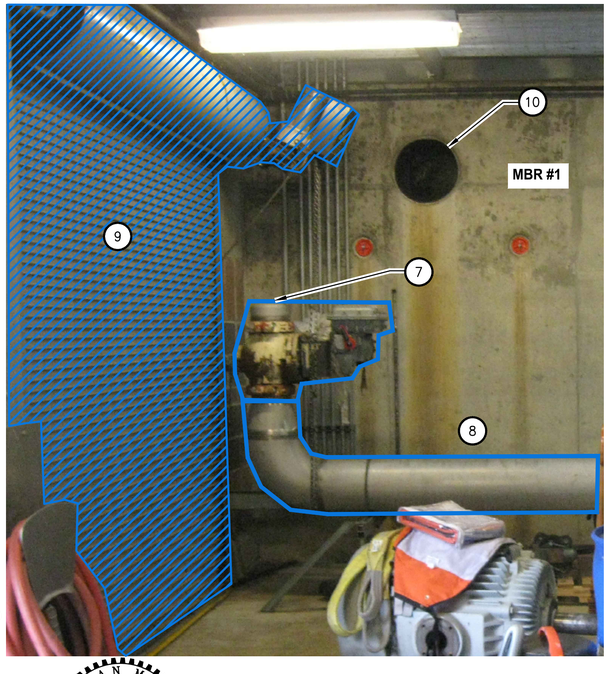

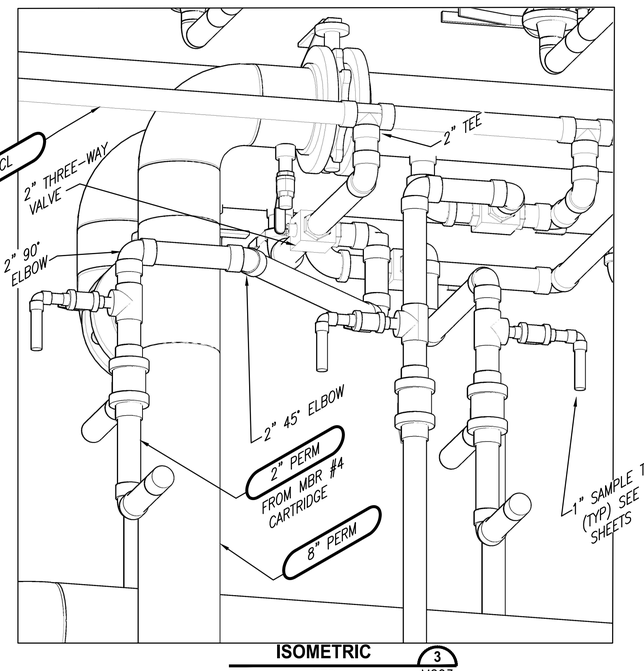

ISOMETRIC 3 M203
NTS

	REVISIONS	DATE	BY

DESIGNED A. MAAS
DRAWN C.WEST
CHECKED L. ROSCOE
APPROVED B. BUNKER

ONE INCH AT FULL SCALE. IF NOT, SCALE ACCORDINGLY
FILE NAME PS1598102-M210.DWG
JOB No. 2161598102
DATE FEBRUARY 2018

ALLAN MAAS — STATE OF WASHINGTON — 27045 — REGISTERED PROFESSIONAL ENGINEER
FEBRUARY 23, 2018

Parametrix
ENGINEERING . PLANNING . ENVIRONMENTAL SCIENCES
1019 39TH AVENUE SE, SUITE 100 | PUYALLUP, WA 98374
P 253.604.6600
WWW.PARAMETRIX.COM

PROJECT NAME
THE CONSOLIDATED BOROUGH OF QUIL CEDA VILLAGE
MBR TREATMENT FACILITY UPGRADE
TULALIP, WASHINGTON

ISOMETRIC VIEWS

DRAWING NO. 45 157
M210

File: PS1598102-M210.dwg Plotted by: peterden Date: Friday, February 23, 2018 11:57:59 AM

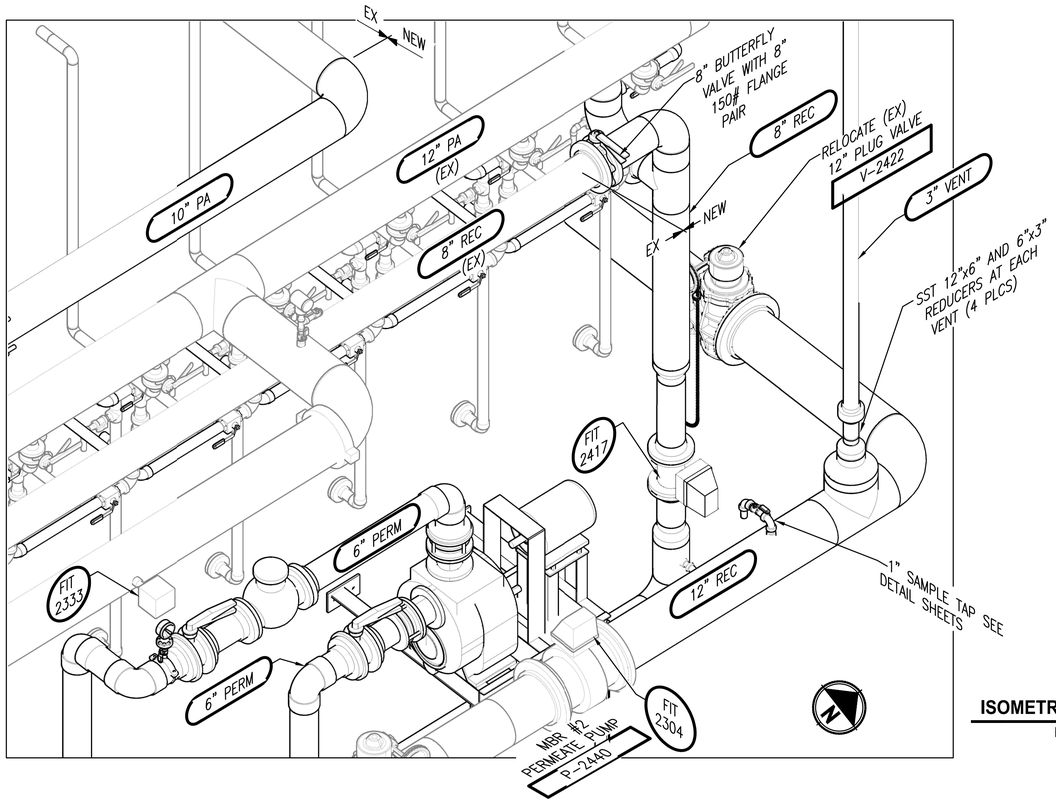

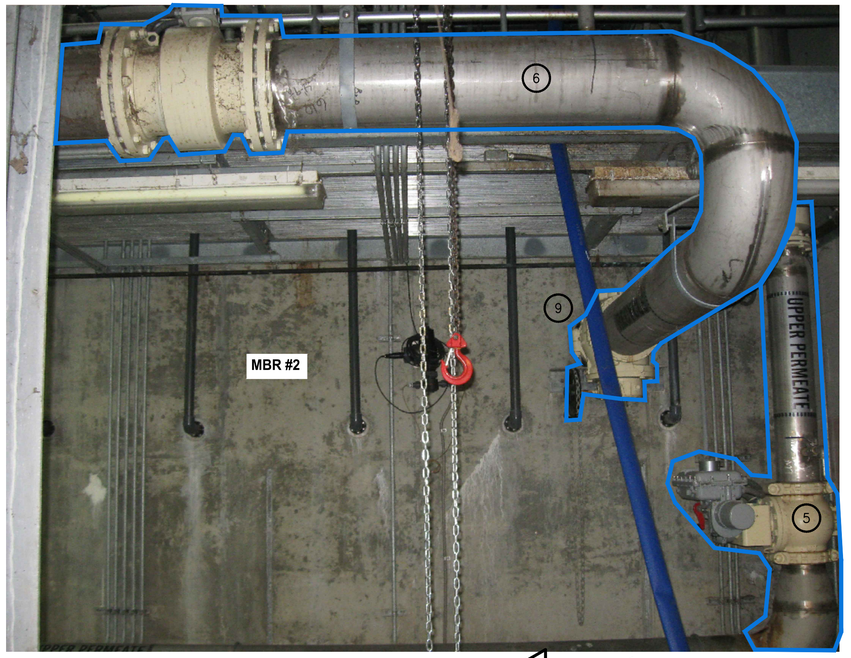

ISOMETRIC / PHOTO 3 — NTS — M202

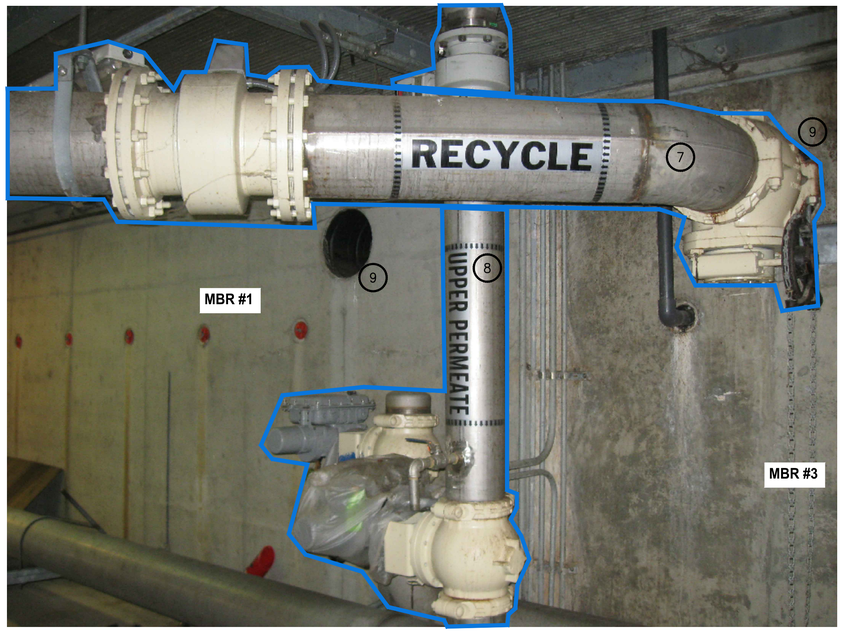

ISOMETRIC / PHOTO 4 — NTS — M202

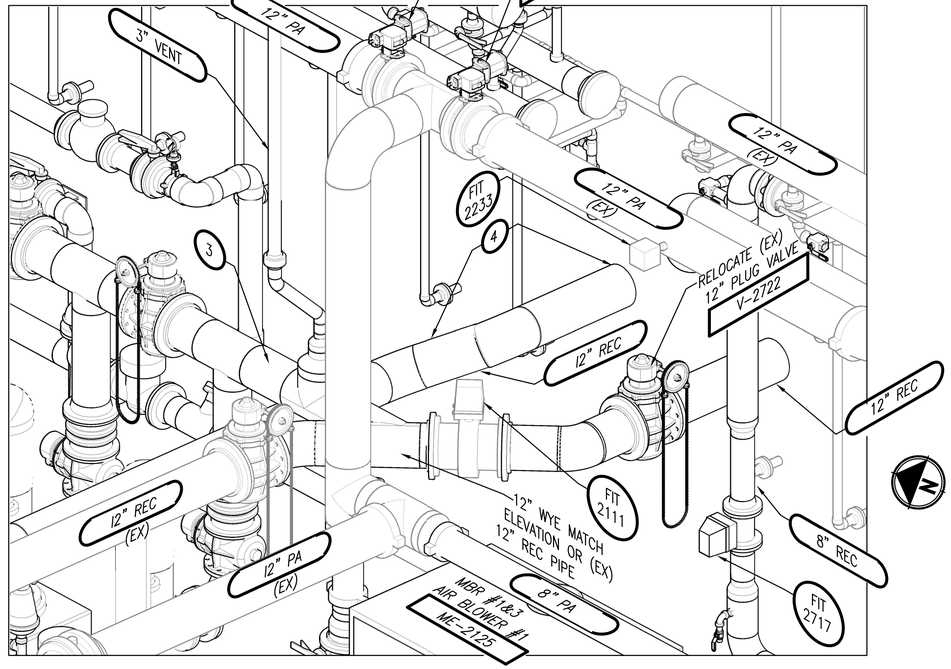

NOTES:

1. ISOMETRIC DETAILS ARE NOT DRAW TO SCALE CONTRACTOR SHALL VERIFY DIMENSIONS, ELEVATIONS AND LOCATIONS PRIOR TO CONSTRUCTION.
2. OBJECTS SCREENED IN ISOMETRIC VIEWS ARE EXISTING FEATURES.

(3) ROLL 12" TEE, SST 12"x6" AND 6"x3" REDUCERS 45° FOR CLEARANCE OF 12" PA PIPE.

(4) (2) SST 45° ELBOWS AND 12" SCH 40 SPOOL ROLLED AS REQD TO MATCH WELL PENETRATION.

(5) MOVE VERTICAL 8" PERM SOUTH 2'-0". GIVE VALVE AND OPERATOR TO OWNER.

(6) CUT, RELOCATE AND LOWER 12" REC PIPE BY MOVING PENETRATION NORTH TO NEW REC BOX OUTLET AND CHANGE ELEVATION TO 8.75'.

(7) CUT AND RELOCATE 12" REC PIPE FROM MBR #3 BY MOVING PENETRATION NORTH 2'-9".

(8) CUT 8" PERMEATE PIPE FROM UPPER PERMEATE HEADER AND MOVE TO LOWER PERMEATE HEADER. GIVE VALVE AND OPERATOR TO OWNER.

(9) FILL OLD PENETRATIONS PER DETAIL 5, SHEET M2.

LEGEND:

DEMOLITION OR REMOVAL

MOVE AND RELOCATE

PROJECT WORK SHOWN ON THIS DRAWING IS ALL INCLUDED IN SCHEDULE B

	REVISIONS	DATE	BY

DESIGNED A. MAAS
DRAWN C.WEST
CHECKED L. ROSCOE
APPROVED B. BUNKER

ONE INCH AT FULL SCALE. IF NOT, SCALE ACCORDINGLY
FILE NAME PS1598102-M211.DWG
JOB No. 2161598102
DATE FEBRUARY 2018

ALLAN MAAS — STATE OF WASHINGTON — 27045 — REGISTERED PROFESSIONAL ENGINEER

FEBRUARY 23, 2018

Parametrix
ENGINEERING . PLANNING . ENVIRONMENTAL SCIENCES
1019 39TH AVENUE SE, SUITE 100 | PUYALLUP, WA 98374
P 253.604.6600
WWW.PARAMETRIX.COM

PROJECT NAME
THE CONSOLIDATED BOROUGH OF QUIL CEDA VILLAGE
MBR TREATMENT FACILITY UPGRADE
TULALIP, WASHINGTON

ISOMETRIC VIEWS

DRAWING NO. 46 OF 157

M211

File: PS1598102-M211.dwg Plotted by: peterden Date: Thursday, February 22, 2018 4:14:52 PM

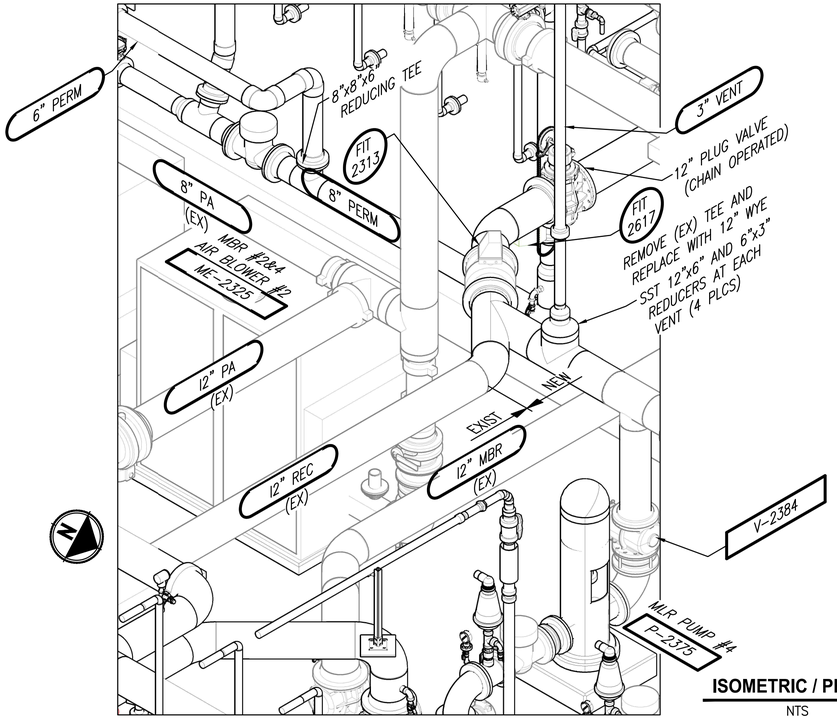

ISOMETRIC / PHOTO 5 M202
NTS

ISOMETRIC / PHOTO 6 M202
NTS

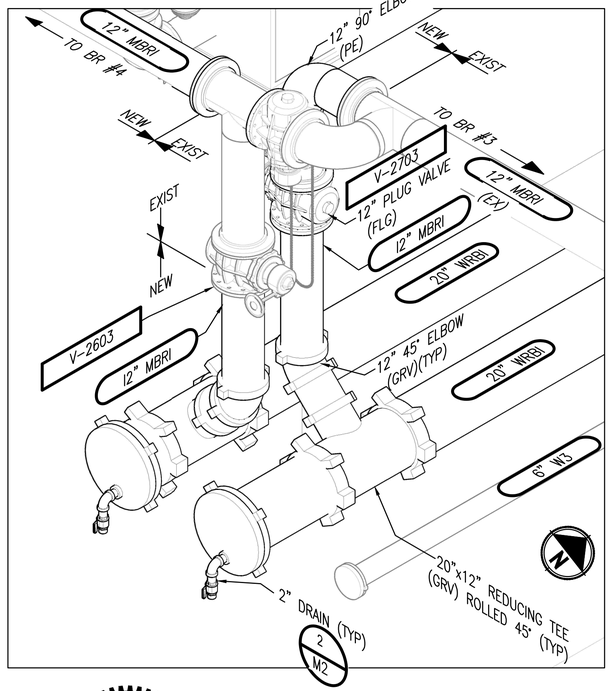

NOTES:

1. ISOMETRIC DETAILS ARE NOT DRAW TO SCALE CONTRACTOR SHALL VERIFY DIMENSIONS, ELEVATIONS AND LOCATIONS PRIOR TO CONSTRUCTION.
2. OBJECTS SCREENED IN ISOMETRIC VIEWS ARE EXISTING FEATURES.

(3) CUT AND REMOVE VERTICAL TEE AND REPLACE WITH HORIZONTAL WYE. REQUIRED AT 2 LOCATIONS, MBR #2 AND #3. CONTRACTOR TO FIELD VERIFY NEW PIPE DIMENSION REQUIREMENTS.

(4) CONTRACTOR TO CONFIRM PIPE PENETRATION LOCATIONS WITH KUBOTA BEFORE DRILLING.

PROJECT WORK SHOWN ON THIS DRAWING IS ALL INCLUDED IN SCHEDULE B

LEGEND:

DEMOLITION OR REMOVAL

MOVE AND RELOCATE

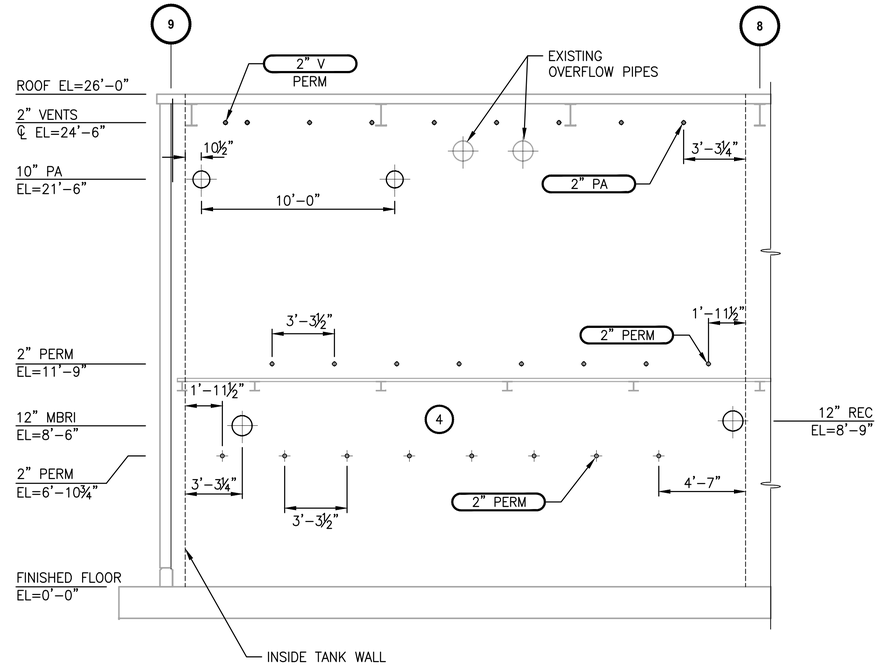

MBR#4 WALL PENETRATIONS
DETAIL 1 –
3/16"=1'-0"

	REVISIONS	DATE	BY

DESIGNED A. MAAS
DRAWN C.WEST
CHECKED L. ROSCOE
APPROVED B. BUNKER

ONE INCH AT FULL SCALE. IF NOT, SCALE ACCORDINGLY
FILE NAME 2161598102-M212.DWG
JOB No. 2161598102
DATE FEBRUARY 2018

ALAN MAAS — STATE OF WASHINGTON — 27045 — REGISTERED PROFESSIONAL ENGINEER
FEBRUARY 23, 2018

Parametrix
ENGINEERING . PLANNING . ENVIRONMENTAL SCIENCES
1019 39TH AVENUE SE, SUITE 100 | PUYALLUP, WA 98374
P 253.604.6600
WWW.PARAMETRIX.COM

PROJECT NAME
THE CONSOLIDATED BOROUGH OF QUIL CEDA VILLAGE
MBR TREATMENT FACILITY UPGRADE
TULALIP, WASHINGTON

ISOMETRIC VIEWS

DRAWING NO. 47 OF 157
M212

File: 2161598102-M212.dwg Plotted by: peterden Date: Friday, February 23, 2018 10:19:20 AM

ABBREVIATIONS

a	CIRCUIT BREAKER AUX. CONTACT, CLOSED WHEN BREAKER IS CLOSED	FSH	FLOAT SWITCH HIGH		RELAY
		FSO	FLOAT SWITCH OVERFLOW	OIT	OPERATOR INTERFACE TERMINAL
A	AMMETER, AMPERES	FU	FUSE	P	POLE, PUMP
AC	ALTERNATING CURRENT	(F)	FUTURE FUT,	PB	PULLBOX
A/D	ANALOG TO DIGITAL	FVNR	FULL VOLTAGE, NON REVERSING	PBSW	PUSHBUTTON SWITCH
ADJ	ADJUSTABLE			PC	PHOTO CELL
AF	AMPERE FRAME	FVR	FULL VOLTAGE, REVERSING	PEC	PHOTOELECTRIC CELL
AFD	ADJUSTABLE FREQUENCY DRIVE			PF	POWER FACTOR
		FWD	FORWARD	pH	MEASURE OF ACIDITY OR ALKALINITY
AIC	AMPERES INTERRUPTING CAPACITY	GEN	GENERATOR		
		GFI	GROUND FAULT INTERRUPTER	PH	PHASE
AMP	AMPERES	GND	GROUND	PIOP	PLC I/O PANEL
ANN	ANNUNICATOR	GRS	GALVANIZED RIGID STEEL	PLC	PROGRAMMABLE LOGIC CONTROLLER
AS	AMMETER SWITCH	O_2H_2	HYDROGEN PEROXIDE		
AT	AMPERE TRIP	HH	HANDHOLE	PNL	PANEL
ATS	AUTOMATIC TRANSFER SWITCH	HOA	HAND–OFF–AUTOMATIC	PNLBD	PANELBOARD
		HOR	HAND–OFF–REMOTE	POSN	POSITION
AUTO	AUTOMATIC	HPS	HIGH PRESSURE SODIUM	POT	POTENTIOMETER
AWG	AMERICAN WIRE GAGE	HT	HEAT TAPE, HEAT TRACE	PPS	PACKAGED POWER SUPPLY
b	CIRCUIT BREAKER AUX. CONTACT, CLOSED WHEN BREAKER IS OPEN	HTR	HEATER		
		HV	HIGH VOLTAGE	PRI	PRIMARY
		HZ	HERTZ (CYCLES PER SECOND)	PSH	PRESSURE SWITCH HIGH
				PWR	POWER
BCG	BARE COPPER GROUND	IND LT	INDICATING LIGHT	(R)	RELOCATED
C	CONDUIT	INCAND	INCANDESCENT	RCPT	RECEPTACLE
CAB	CABINET	INSTR	INSTRUMENT, INSTRUMENTATION	RCT	REPEAT CYCLE TIMER
CAP	CAPACITOR			REF	REFERENCE
CB	CIRCUIT BREAKER	I/O	INPUT/OUTPUT	RT	RESET TIMER
CC	CONTROL CABLE, CLOSING COIL	ISB	INTRINSICALLY SAFE BARRIER	SCCR	SHORT CIRCUIT CURRENT RATING
CHH	COMMUNICATION HANDHOLE	ISR	INTRINSICALLY SAFE RELAY	SCR	SILICON CONTROLLED RECTIFIER
CC	CLARIFIER CONSOLE	JB	JUNCTION BOX	SD	SMOKE DETECTOR
CKT	CIRCUIT	KA	KILOAMPERES	SIG	SIGNAL
CMH	COMMUNICATION MANHOLE	KCMIL	THOUSANDS OF CIRCULAR MILS	SN	SOLID NEUTRAL
CO	CONDUIT ONLY			SPD	SURGE PROTECTION DEVICE
COMM	COMMUNICATION	KV	KILOVOLTS		
COND	CONDUCTOR	KVA	KILOVOLT AMPERES	SPDT	SINGLE POLE, DOUBLE THROW
CPT	CONTROL POWER TRANSFORMER	KVAR	KILOVOLT AMPERES REACTIVE	SPST	SINGLE POLE, SINGLE THROW
CP	CONTROL PANEL	KVARH	KILOVOLT AMPERES REACTIVE HOURS	SST	STAINLESS STEEL
CR	CONTROL RELAY	KWH	KILOWATT HOURS	SV	SOLENOID VALVE
CS	CONTROL STATION	LCS	LOCAL CONTROL STATION	SW	SWITCH
CT	CURRENT TRANSFORMER	LTG	LIGHTING	SWBD	SWITCHBOARD
DB	DIRECT BURIAL	LTS	LIGHTS	SWGR	SWITCHGEAR
DC	DIRECT CURRENT	LP	LIGHTING PANEL	SYNC	SYNCHRONIZING
DIAG	DIAGRAM	LR	LINE REACTOR	TB	TERMINAL BLOCK
DISC	DISCONNECT	(M)	MODIFIED	TC	TELEPHONE CABINET
DISTR	DISTRIBUTION	mA	MILLIAMPERES	TEL	TELEPHONE
DIV	DIVISION	MCC	MOTOR CONTROL CENTER	TER	TERMINAL
DP	DISTRIBUTION PANEL	MCP	MOTOR CIRCUIT PROTECTION OR MAIN CONTROL PANEL	TO	TIMED OPENING
DPDT	DOUBLE POLE, DOUBLE THROW			TOA	TEST–OFF–AUTOMATIC
		MCM	THOUSAND CIRCULAR MILS (KCMIL)	TSP	TWISTED SHIELDED PAIR
DPST	DOUBLE POLE, SINGLE THROW			TST	TWISTED SHIELDED TRIAD
		MLO	MAIN LUGS ONLY	TVSS	TRANSIENT VOLTAGE SURGE SUPPRESSOR
(E)	EXISTING	MON	MONITOR		
EE	ELECTRICAL ENCLOSURE	MOV	MOTOR OPERATED VALVE	UGND	UNDERGROUND
EHH	ELECTRICAL HANDHOLE	MS	MOTOR STARTER	UPS	UNINTERRUPTIBLE POWER SUPPLY
ELEM	ELEMENTARY	MTD	MOUNTED		
EMERG	EMERGENCY	MTG	MOUNTING	VA	VOLT–AMPERES
ENCL	ENCLOSURE	MTS	MANUAL TRANSFER SWITCH	VAR	VOLT AMPERES REACTIVE
EFFL	EFFLUENT			VFD	VARIABLE FREQUENCY DRIVE
EGC	EQUIPMENT GROUND CONDUCTOR	MV	MEDIUM VOLTAGE		
		(N)	NEW	VH	VAR–HOUR
EMT	ELECTRICAL METALLIC TUBING	NC	NORMALLY CLOSED	VS	VOLTMETER SWITCH
		NEMA	NATIONAL ELECTRICAL MANUFACTURER'S ASSOC.	W	WIRE, WATTS
EQPT	EQUIPMENT			WH	WATTHOUR METER
ETM	ELAPSED TIME METER	NEUT	NEUTRAL	WHDM	WATTHOUR DEMAND METER
FCV	FLOW CONTROL VALVE	NO	NORMALLY OPEN, NUMBER		
FDR	FEEDER			WP	WEATHERPROOF
FE	FLOW ELEMENT	OCP	OZONE CONTROL PANEL	WR	WEATHER RESISTANT
FIT	FLOW INDICATING TRANSMITTER	OL	OVERLOAD	WT	WATERTIGHT
		OT	OVER TEMPERATURE	WWR	WASHWATER RECOVERY
FLEX	FLEXIBLE	OVLD	THERMAL OVERLOAD	XFMR	TRANSFORMER
FLUOR	FLUORESCENT				
FREQ	FREQUENCY				

GENERAL NOTES

G1 THE INSTALLATION OF ALL EQUIPMENT SHOWN ON THESE DRAWINGS OR DESCRIBED IN THE SPECIFICATIONS SHALL CONFORM TO THE REQUIREMENTS SET FORTH IN THE LATEST EDITIONS OF ALL APPLICABLE CODES AND UTILITY COMPANY STANDARDS. CONTACT THE UTILITY COMPANY REPRESENTATIVES AND VERIFY THEIR REQUIREMENTS.

G2 THIS IS A GENERALIZED LEGEND SHEET. THIS CONTRACT MAY NOT USE ALL INFORMATION SHOWN.

G3 NOTIFY THE ENGINEER IMMEDIATELY IF CONFLICTS IN EQUIPMENT LOCATIONS ARE DISCOVERED OR IF PROBLEMS ARISE DUE TO FIELD CONDITIONS, LACK OF INFORMATION OR ANY OTHER REASON.

G4 INFORMATION SHOWN MAY NOT BE ALL INCLUSIVE. SEE ALSO ANSI C37.2, Y1.1, Y32.2, AND Y32.9.

G5 REFER TO THE MECHANICAL DRAWINGS FOR EXACT LOCATIONS OF MECHANICAL EQUIPMENT AND FOR CERTAIN CONNECTIONS TO BE MADE TO ELECTRICAL CIRCUITS.

G6 EQUIPMENT SHOWN IN ½ TONE OR GREY TONE ARE EXISTING OR BY OTHERS.

G7 VERIFY ALL COLOR REQUIREMENTS BEFORE ORDERING MATERIALS.

PLAN SYMBOLS

- OVERHEAD POWER LINE
- P — UNDERGROUND POWER
- UNDERGROUND DUCT LINE (CONC. ENCASEMENT)
- UNDERGROUND DIRECT BURIAL CONDUITS
- CONDUIT CONCEALED IN FLOOR, WALL OR CEILING
- EXPOSED CONDUIT
- ¾"C–3#12 — CALLOUT INDICATING CONDUIT SIZE, NUMBER OF WIRES AND WIRE SIZE
- P2005 — CALLOUT INDICATING CONDUIT PER SCHEDULE
- CONDUIT RUN, HATCH MARKS INDICATE NUMBER OF #12 CONDUCTORS, NO HATCH MARKS IS (2) #12 AND (1) #12 GND
- HOME RUN TO PANELBOARD OR AS INDICATED
- FLEXIBLE CONDUIT
- CONDUIT RUN, BROKEN AND CONTINUED SAME SHEET OR AS NOTED
- CONDUIT WITH SEAL FITTING
- CAP ON CONDUIT STUB
- OPEN CIRCLE DENOTES UPWARD CONDUIT RISER
- SOLID CIRCLE DENOTES DOWNWARD CONDUIT RISER
- INDICATES REMOVAL
- CABLE TRAY
- SURFACE MOUNTED PANELBOARD
- FLUSH MOUNTED PANELBOARD
- LOCAL CONTROL STATION
- 30A(F–20A) — CONTROL STATION W/SAFETY SWITCH (SEE NOTE P4)
- EQUIPMENT MOUNTING STAND
- M — MOTOR
- 30A(F–20A) — SAFETY SWITCH (SEE NOTE P4)
- 30A(F–20A) — COMBINATION MOTOR STARTER AND SAFETY SWITCH (SEE NOTE P4)
- S MS — MANUAL MOTOR STARTER
- GROUND ROD AND BOX
- GROUNDING BRANCH CONNECTION
- # — CONDUIT NUMBER P–POWER C–CONTROL S–SIGNAL
- $S_*^{(a,b)}$ SINGLE POLE SWITCH *(SEE NOTES P2 & P3) 2 = 2 POLE, 3 = 3 WAY, 4 = 4 WAY, K = KEY OPERATED, WP = WEATHERPROOF, D = DIMMER; P = SWITCH WITH PILOT LIGHT, M = HP RATED, LOCKABLE, OS = OCCUPANCY SENSOR
- (a,b) — FLUORESCENT FIXTURE (SEE NOTES P2 & P3)
- WALL/CEILING MOUNTED FIXTURE
- POLE MOUNTED FIXTURE
- WALL/CEILING MOUNTED EXIT LIGHT – DIRECTIONAL ARROW WHERE INDICATED, SHADED AREA INDICATES ILLUMINATED FACE
- WALL/CEILING MOUNTED EMERGENCY LIGHT WITH REMOTE BATTERY
- PE — PHOTO ELECTRIC CELL
- EMERGENCY LIGHT WITH SELF CONTAINED BATTERY
- A — LIGHT FIXTURE IDENTIFICATION
- SINGLE RECEPTACLE, 120V
- SINGLE RECEPTACLE, 208V/240V
- CKT TYPE — DUPLEX WALL RECEPTACLE, 120V WP = WEATHERPROOF G = GROUNDED IG = ISOLATED GROUND GF = GROUND FAULT INTERRUPTER
- DOUBLE DUPLEX, 120V
- DUPLEX FLOOR RECEPTACLE, 120V
- X IN. — MULTI–OUTLET ASSEMBLY WITH SINGLE RECEPTACLE, 120V SPACING (X INCHES) AS NOTED MOUNTING HEIGHT AS NOTED
- SPECIAL PURPOSE WALL RECEPTACLE, RATING AS NOTED
- J, J — FLOOR, WALL AND CEILING JUNCTION BOXES
- WALL TELEPHONE OUTLET (+12")
- WALL TELEPHONE OUTLET (+60")
- FLOOR TELEPHONE OUTLET
- B — BELL/BUZZER
- ELECTRIC METER SOCKET
- MH, HH — MANHOLE OR HANDHOLE
- EQUIPMENT CONNECTION
- INSTRUMENT
- MCC–D — EQUIPMENT ID #
- T — THERMOSTAT

PLAN SYMBOL NOTES

P1 CONDUIT SIZE AND FILL SHALL BE AS INDICATED. WHERE NO SIZE IS SHOWN, THE CONDUIT SHALL BE SIZED IN ACCORDANCE WITH THE EDITION OF THE NATIONAL ELECTRICAL CODE ADOPTED BY THE AUTHORITY HAVING CODE ENFORCEMENT JURISDICTION. WHERE NO FILL IS INDICATED, PROVIDE (3) #12 WIRES. PROVIDE 3/16 INCH NYLON PULL ROPE IN EACH EMPTY CONDUIT.

P2 LOWER CASE LETTERS IN PARENTHESIS ADJACENT TO A SWITCH OR LIGHT FIXTURE INDICATE A SWITCHED CIRCUIT AND IDENTIFY THE FIXTURE/SWITCH COMBINATIONS. FOR FOUR LAMP FLUORESCENT FIXTURES WIRED IN PAIRS WITHIN EACH FIXTURE, THE "a" SWITCH CONTROLS THE OUTER LAMPS AND THE "b" SWITCH CONTROLS THE INNER LAMPS. WIRE 3 LAMP FIXTURES SIMILARLY.

P3 NUMBERS IN PARENTHESIS ADJACENT TO A LIGHT FIXTURE OR RECEPTACLE INDICATE THE LIGHTING PANEL BRANCH CIRCUIT FEEDING THE DEVICE.

P4 NUMBER INDICATES THE AMPERAGE RATING OF THE SWITCH. IDENTIFIERS IN PARENTHESIS INDICATE THAT THE SWITCH IS PROVIDED WITH FUSES AND THE AMPERAGE RATING OF THE FUSE(S).

SINGLE LINE SYMBOLS

- GROUND CONNECTION
- SWITCH, 3 POLE EXCEPT WHERE NOTED. RATING IN AMPERES AS NOTED (NOTE 1)
- TEST SWITCH WITH SHORTING BLOCK
- AUTOMATIC TRANSFER SWITCH 3 POLE, RATING AS NOTED
- ST — SHUNT TRIP
- FUSE
- FUSE CUTOUT
- 0MCP 00AT / 000AF 000AT — CIRCUIT BREAKER, 3 POLE EXCEPT WHERE NOTED. RATING IN AMPERES AS NOTED.
- POWER CIRCUIT BREAKER DRAWOUT ABOVE 1500V RATING AS NOTED
- SURGE ARRESTER
- CURRENT TRANSFORMER
- VOLTAGE TRANSFORMER
- POWER OR DISTRIBUTION TRANSFORMER RATING AS NOTED
- 7.5 — MOTOR. NUMBER INDICATES HORSEPOWER; EQUIPMENT NAME; EQUIPMENT ID #
- G — GENERATOR
- LINE REACTOR
- BUS STAB ON MCC OR SWITCHGEAR, CORD & PLUG CONNECTION FOR MOTORS
- THERMAL OVERLOAD
- * — *A – AMMETER, V – VOLTMETER, WH – WATTHOUR METER, GS – GROUND FAULT SENSOR
- AS — AMMETER SWITCH
- VS — VOLTMETER SWITCH
- 3 — ELEMENTARY DIAGRAM NUMBER
- KIRK KEY INTERLOCK
- POWER RECEPTACLE FOR PORTABLE EQUIPMENT
- TERMINATOR/POTHEAD
- SPLICE, TERMINATION
- 1* — *MOTOR STARTER. NUMBER INDICATES NEMA SIZE (NONE) FULL VOLTAGE NONREVERSING, A = AUTOTRANSFORMER REDUCED VOLTAGE, SS = SOLID STATE –2S = TWO SPEED, CAPACITOR – KVAR INDICATED
- VACUUM BREAK SWITCH
- VFD ### — VARIABLE FREQUENCY DRIVE
- P200 — CALLOUT INDICATING CONDUIT AND WIRE PER SCHEDULE
- SPD — SURGE PROTECTION DEVICE

LOOP WIRING/ELEMENTARY DIAGRAM SYMBOLS

- FUSE. RATING IN AMPERES
- M — MOTOR
- ETM — ELAPSED TIME METER
- CR1 — CONTROL DEVICE COIL. NUMBER, WHEN USED, DISTINGUISHES BETWEEN DEVICES OF THE SAME TYPE.
  - ALT – ALTERNATOR
  - CR – CONTROL RELAY
  - GR – GENERAL RELAY
  - ISR – INTRINSICALLY SAFE RELAY
  - LR – LATCH RELAY
  - SV – SOLENOID VALVE
  - PR – PROBE RELAY
  - TR – TIMING RELAY
  - TOF – TIMING OFF RELAY
  - MPR – MODE PRIORITY RELAY
- W — PUSH–TO–TEST
- W — INDICATING LIGHT

INDICATING LIGHT COLORS:
A – AMBER, B – BLUE, C – CLEAR, G – GREEN, R – RED, N – NEON, W – WHITE, Y – YELLOW

- TERMINAL
- OPEN CLOSED — SWITCH
- OPEN CLOSED — PUSHBUTTON,
- SWITCH, 3–POLE
- MULTI–POSITION SELECTOR SWITCH
- H O A — HAND–OFF–AUTOMATIC SWITCH
- H O R — HAND–OFF–REMOTE SWITCH
- CONTROL POWER TRANSFORMER; 120 VAC
- BUS STAB ON MCC, CORD & PLUG CONNECTION FOR MOTORS
- THERMAL OVERLOAD
- BUZZER
- HORN
- BELL
- 20A 3P — CIRCUIT BREAKER
- SOLENOID VALVE

SENSING SWITCHES		
CLOSE ON		SENSED VARIABLE
RISING	FALLING	
		FLOW
		LEVEL
		PRESSURE
		TEMPERATURE
LIMIT SWITCHES		
LS		CLOSE ON REACHING LIMIT
LS		CLOSE ON LEAVING LIMIT

TIMED CONTACTS			
SYMBOL	NORMAL	OPEN TO CLOSED	CLOSED TO OPEN
	OPEN	DELAYED	INSTANTANEOUS
	CLOSED	INSTANTANEOUS	DELAYED
	OPEN	INSTANTANEOUS	DELAYED
	CLOSED	DELAYED	INSTANTANEOUS

ELEMENTARY DIAGRAMS

E1 "NORMAL" STATUS OF SWITCHES OR CONTACTS IS THE SHELF POSITION.

E2 NUMBERS AND LETTERS IDENTIFY DEVICE.

- REACTOR
- PLC OUTPUT — PLC OUTPUT CONTACT
- OPEN CLOSED — CONTACT
- PLC INPUT — PLC INPUT CONTACT
- WIRING INSIDE ENCLOSURE
- FIELD WIRING
- MOTOR HTR — MOTOR HEATER

FIRE ALARM

- FACP — FIRE ALARM CONTROL PANEL
- F — HORN AND STROBE
- F — MANUAL PULL STATION
- SH — COMBINATION SMOKE/HEAT DETECTOR

PLOTTED BY: peterden DATE: Friday, February 23, 2018 2:45:52 PM
PATH: U:\PSG\Projects\Clients\1598-TulalipTribes\216-1598-102 MBR Upgrade\PSvcs\CADD\DWG
VERSION20.01-2017.01.09
LAYOUT: E1

REVISIONS	DATE	BY

DESIGNED A. STOKES
DRAWN D. PETERSON
CHECKED R. ROHLER
APPROVED B. BUNKER

ONE INCH AT FULL SCALE. IF NOT, SCALE ACCORDINGLY
FILE NAME PS1598102–E1
JOB No. 216–1598–102
DATE FEBRUARY 2018

ARTHUR G. STOKES — STATE OF WASHINGTON — 34736 — REGISTERED PROFESSIONAL ENGINEER

FEBRUARY 23, 2018

Parametrix
ENGINEERING . PLANNING . ENVIRONMENTAL SCIENCES
1019 39TH AVENUE SE, SUITE 100 | PUYALLUP, WA 98374
P 253.604.6600
WWW.PARAMETRIX.COM

PROJECT NAME
THE CONSOLIDATED BOROUGH OF QUIL CEDA VILLAGE
MBR TREATMENT FACILITY UPGRADE
TULALIP, WASHINGTON

ELECTRICAL LEGEND AND ABBREVIATIONS

DRAWING NO. 48 OF 157
E1

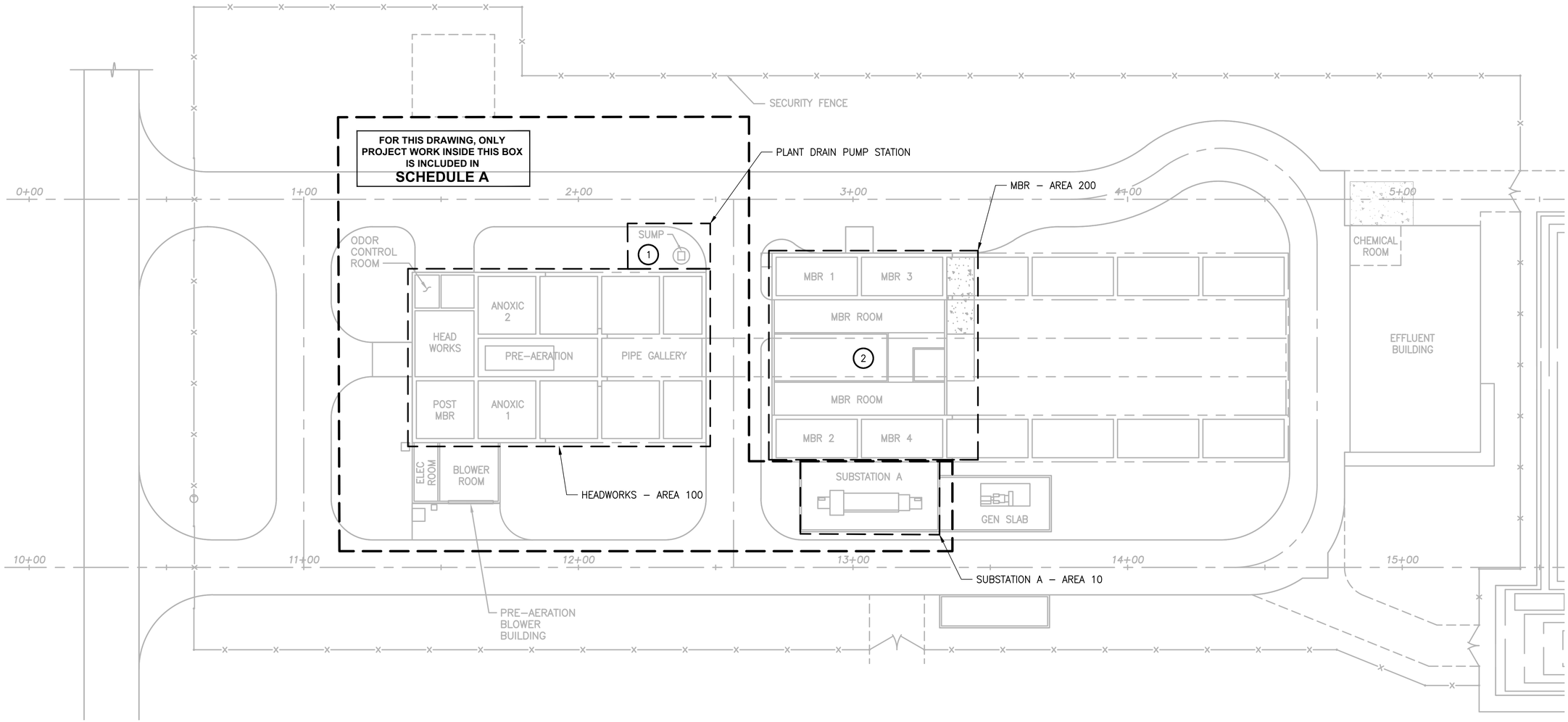

PLAN
SCALE: 1"= 20'–0"

NOTES:

1. SEE SHEETS E9, E201, AND E202 FOR DESCRIPTION OF WORK FOR PLANT DRAIN PUMP STATION ELECTRICAL CONNECTIONS.
2. MBR AREA IS BOTH SCHEDULE A AND SCHEDULE B. SEE ELECTRICAL SHEETS FOR DESIGNATION.

	REVISIONS	DATE	BY

DESIGNED A. STOKES
DRAWN D. PETERSON
CHECKED R. ROHLER
APPROVED B. BUNKER

ONE INCH AT FULL SCALE. IF NOT, SCALE ACCORDINGLY
FILE NAME PS1598102-E2
JOB No. 216-1598-102
DATE FEBRUARY 2018

ARTHUR G. STOKES — STATE OF WASHINGTON — 34736 — REGISTERED PROFESSIONAL ENGINEER

FEBRUARY 23, 2018

Parametrix
ENGINEERING . PLANNING . ENVIRONMENTAL SCIENCES
1019 39TH AVENUE SE, SUITE 100 | PUYALLUP, WA 98374
P 253.604.6600
WWW.PARAMETRIX.COM

PROJECT NAME
THE CONSOLIDATED BOROUGH OF QUIL CEDA VILLAGE MBR TREATMENT FACILITY UPGRADE
TULALIP, WASHINGTON

ELECTRICAL SITE PLAN

DRAWING NO. 49 OF 157
E2

LAYOUT: E2 PATH: U:\PSO\Projects\Clients\1598–TulalipTribes\216–1598–102 MBR Upgrade\99Svcs\CADD\DWG PLOTTED BY: peterden DATE: Friday, February 23, 2018 1:49:32 PM

NOTES:

1. PROVIDE NEW CIRCUIT BREAKERS FOR FEEDERS TO MCC–3A & MCC–3B. SEE SHEET E4.
2. ELECTRONIC TRIP UNIT ABBREVIATIONS:
   L = LONG TIME
   S = SHORT TIME
   I = INSTANTANEOUS
   G = GROUND
3. SEE SHEET E7 AND E8 FOR CIRCUIT SCHEDULE.

PROJECT WORK SHOWN ON THIS DRAWING IS ALL INCLUDED IN SCHEDULE A

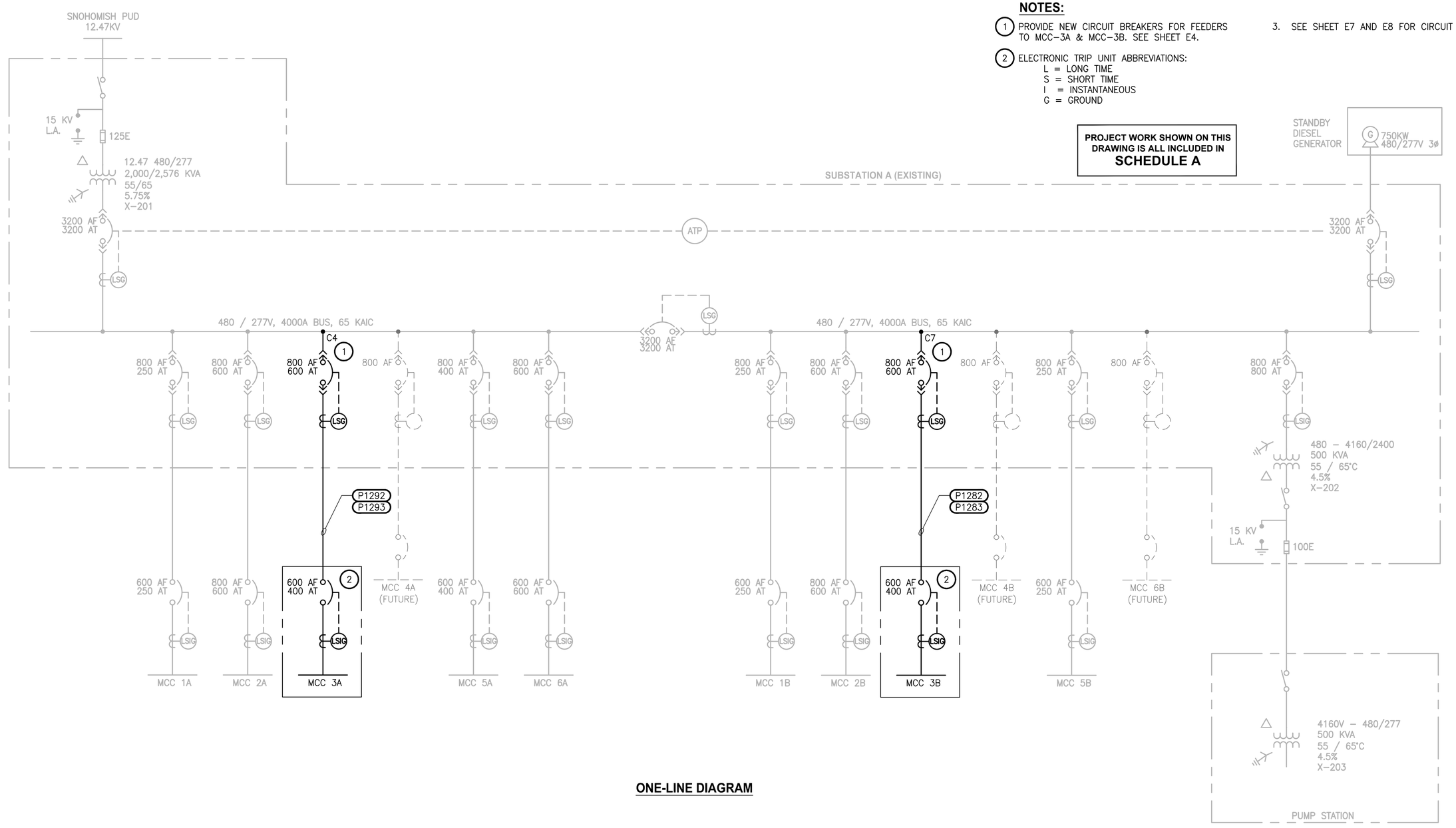

ONE-LINE DIAGRAM

	REVISIONS	DATE	BY

DESIGNED B. WILLIAMS
DRAWN D. PETERSON
CHECKED R. ROHLER
APPROVED B. BUNKER

ONE INCH AT FULL SCALE. IF NOT, SCALE ACCORDINGLY
FILE NAME PS1598102–E3
JOB No. 216–1598–102
DATE FEBRUARY 2018

ARTHUR G. STOKER — STATE OF WASHINGTON — 34736 — REGISTERED PROFESSIONAL ENGINEER

FEBRUARY 23, 2018

Parametrix
ENGINEERING . PLANNING . ENVIRONMENTAL SCIENCES
1019 39TH AVENUE SE, SUITE 100 | PUYALLUP, WA 98374
P 253.604.6600
WWW.PARAMETRIX.COM

PROJECT NAME
THE CONSOLIDATED BOROUGH OF QUIL CEDA VILLAGE
MBR TREATMENT FACILITY UPGRADE
TULALIP, WASHINGTON

SUBSTATION A ONE-LINE DIAGRAM

DRAWING NO. 50 OF 157
E3

PATH: U:\PSO\Projects\Clients\1598–TulalipTribes\216–1598–102 MBR Upgrade\99Svcs\CADD\DWG PLOTTED BY: peterden DATE: Friday, February 23, 2018 1:05:57 PM
LAYOUT: E3

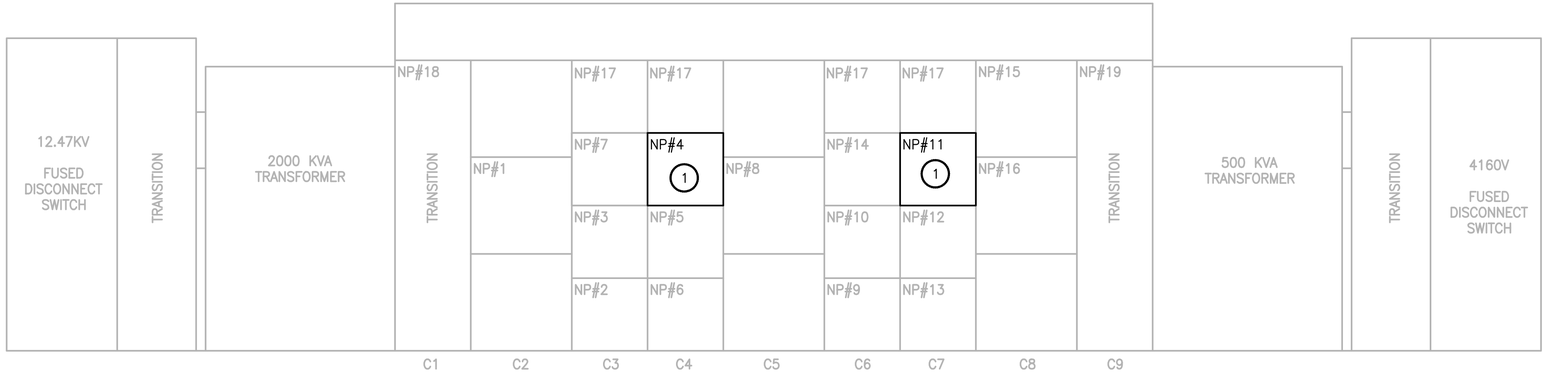

NOTES:

1. PROVIDE, INSTALL AND TEST NEW CIRCUIT BREAKERS FOR FEEDERS TO MCC 3A & MCC–3B.
   a. CIRCUIT BREAKERS SHALL BE GENERAL ELECTRIC ENTELLIGUARD G. PROVIDE WITH ALL NECESSARY EQUIPMENT TO RETROFILL EXISTING BREAKER COMPARTMENTS THAT WERE ORIGINALLY SLATED FOR GENERAL ELECTRIC WPX–08 WAVEPRO CATALOG #WE3DABDXXXABXXX BREAKERS. PROVIDE A COMPLETE EQUIPMENT SUBMITTAL FOR REVIEW BY OWNER'S REPRESENTATIVE. THE SUBMITTAL SHALL INCLUDE COMPLETE CATALOG AND TECHNICAL INFORMATION AS WELL AS CONFIRMATION THAT THE EXISTING COMPARTMENT IN SUBSTATION A IS FULLY EQUIPPED AND COMPATIBLE WITH THE NEW CIRCUIT BREAKER. NOTE THAT SUBSTATION A WAS SUPPLIED BY GENERAL ELECTRIC INDUSTRIAL SYSTEMS IN 2003 VIA SHOP ORDER #911596, REQUISITION #438–96022–LV–BUR.
   b. PRIOR TO ENERGIZATION, CIRCUIT BREAKER SHALL BE CONFIGURED PER COORDINATION STUDY SETTING AND SHALL BE TESTED PER NATIONAL ELECTRIC TESTING ASSOCIATION (NETA) ACCEPTANCE TEST SPECIFICATION (ATS) FOR LOW VOLTAGE POWER CIRCUIT BREAKERS (7.6.1.2). PROVIDE A COMPLETE SUBMITTAL FOR REVIEW BY OWNER'S REPRESENTATIVE OF THE TEST RESULTS PER NETA ATS TEST DOCUMENTATION STANDARDS.
   c. COORDINATE AND SCHEDULE ANY OUTAGES NECESSARY FOR INSTALLATION OF THE CIRCUIT BREAKER AND ASSOCIATED CONDUCTORS WITH THE OWNER A MINIMUM OF 2 WEEKS PRIOR TO START.

2. MATCH EXISTING NAMEPLATE COLORS AND STYLE.

NP#	HEIGHT	WIDTH	LETTERS	FIRST LINE	SECOND LINE	THIRD LINE
1	2"	4"	⅛"	2000 KVA	TRANSFORMER	
2	2"	4"	⅛"	MCC 1A		
3	2"	4"	⅛"	MCC 2A		
4	2"	4"	⅛"	MCC 3A		
5	2"	4"	⅛"	MCC 4A	FUTURE	
6	2"	4"	⅛"	MCC 5A		
7	2"	4"	⅛"	MCC 6A		
8	2"	4"	⅛"	TIE	CIRCUIT BREAKER	
9	2"	4"	⅛"	MCC 1B		
10	2"	4"	⅛"	MCC 2B		
11	2"	4"	⅛"	MCC 3B		
12	2"	4"	⅛"	MCC 4B	FUTURE	
13	2"	4"	⅛"	MCC 5B		
14	2"	4"	⅛"	MCC 6B	FUTURE	
15	2"	4"	⅛"	500 KVA	TRANSFORMER	PUMP STATION
16	2"	4"	⅛"	GENERATOR	MAIN CIRCUIT BREAKER	
17	2"	4"	⅛"	SPACE		
18	2"	4"	⅛"	ATP PLC		
19	2"	4"	⅛"	REMOTE	SWITCHGEAR	PLC I/O RACK

2

NAMEPLATE SCHEDULE

PROJECT WORK SHOWN ON THIS DRAWING IS ALL INCLUDED IN SCHEDULE A

PATH: U:\PSO\Projects\Clients\1598–Tulalip Tribes\216–1598–102 MBR Upgrade\99Svcs\CAD0\DWG PLOTTED BY: peterden DATE: Friday, February 23, 2018 4:24:59 PM
LAYOUT: E4

	REVISIONS	DATE	BY

DESIGNED B. WILLIAMS
DRAWN D. PETERSON
CHECKED R. ROHLER
APPROVED B. BUNKER

ONE INCH AT FULL SCALE. IF NOT, SCALE ACCORDINGLY
FILE NAME PS1598102–E4
JOB No. 216–1598–102
DATE FEBRUARY 2018

ARTHUR G. STOKES
STATE OF WASHINGTON
34736
REGISTERED
PROFESSIONAL ENGINEER
FEBRUARY 23, 2018

Parametrix
ENGINEERING . PLANNING . ENVIRONMENTAL SCIENCES
1019 39TH AVENUE SE, SUITE 100 | PUYALLUP, WA 98374
P 253.604.6600
WWW.PARAMETRIX.COM

PROJECT NAME
THE CONSOLIDATED BOROUGH OF QUIL CEDA VILLAGE
MBR TREATMENT FACILITY UPGRADE
TULALIP, WASHINGTON

SUBSTATION A ELEVATION

DRAWING NO. 51 OF 157
E4

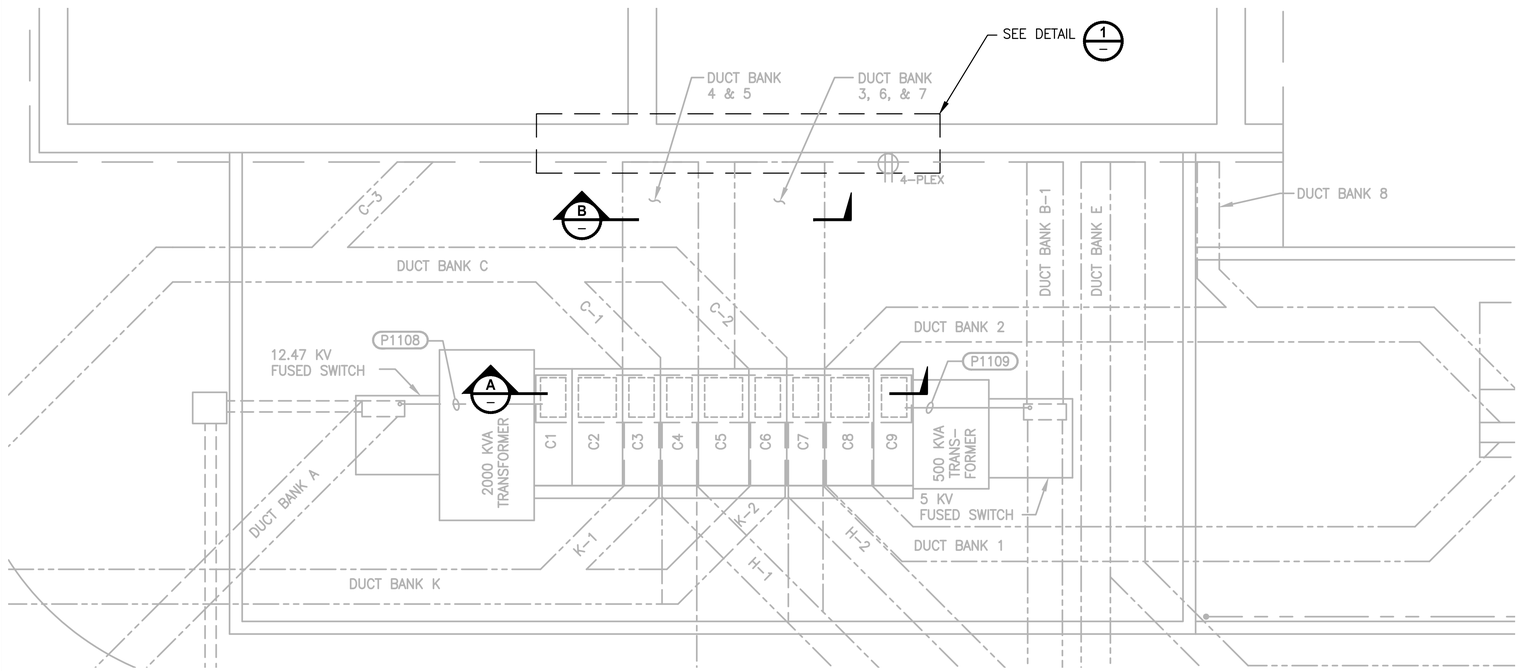

PLAN
1/4"= 1'-0"

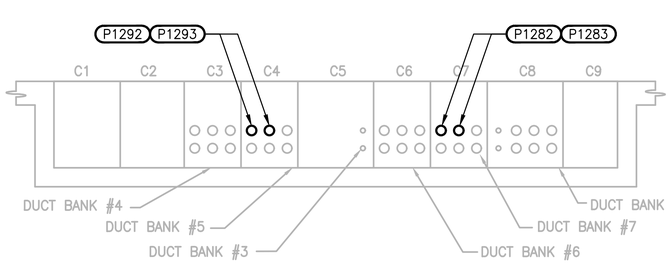

RACEWAY ENTRANCE - EAST WALL
SECTION A
3/8"=1'-0"

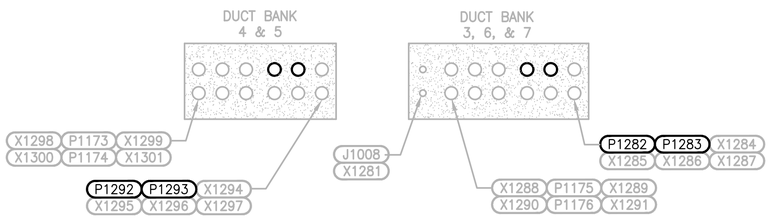

DUCT BANK 3, 4, 5, 6, & 7
SECTION B
1/2"=1'-0"

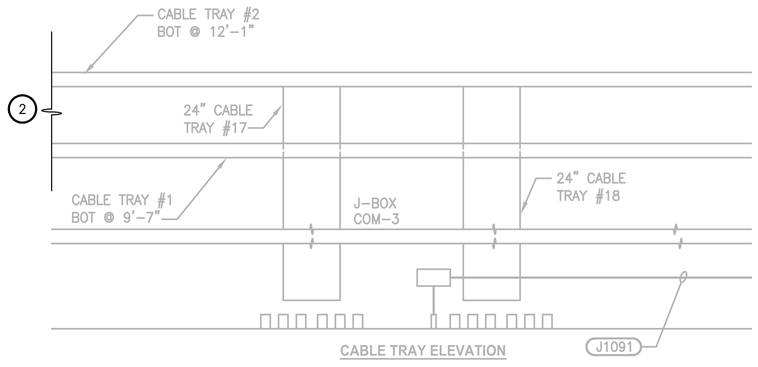

CABLE TRAY ELEVATION

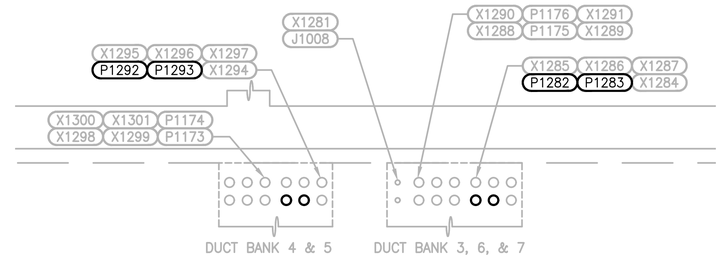

CONDUIT STUB-UP PLAN
DUCT BANK
DETAIL 1
3/8"=1'-0"

NOTES:

1. ALL CONDUIT IDENTIFIED ON THIS DRAWING ARE EXISTING. SEE SHEET E7 AND E8 FOR CIRCUIT SCHEDULE.

(2) SEE SHEET E207 FOR CONTINUATION OF CABLE TRAYS.

PROJECT WORK SHOWN ON THIS DRAWING IS ALL INCLUDED IN SCHEDULE A

REVISIONS	DATE	BY

DESIGNED B. WILLIAMS
DRAWN D. PETERSON
CHECKED R. ROHLER
APPROVED B. BUNKER

ONE INCH AT FULL SCALE. IF NOT, SCALE ACCORDINGLY
FILE NAME PS1598102-E5
JOB No. 216-1598-102
DATE FEBRUARY 2018

ARTHUR G. STORY — STATE OF WASHINGTON — 34736 — REGISTERED PROFESSIONAL ENGINEER

FEBRUARY 23, 2018

Parametrix
ENGINEERING . PLANNING . ENVIRONMENTAL SCIENCES
1019 39TH AVENUE SE, SUITE 100 | PUYALLUP, WA 98374
P 253.604.6600
WWW.PARAMETRIX.COM

PROJECT NAME
THE CONSOLIDATED BOROUGH OF QUIL CEDA VILLAGE
MBR TREATMENT FACILITY UPGRADE
TULALIP, WASHINGTON

SUBSTATION A PLAN AND SECTIONS

DRAWING NO. 52 OF 157

E5

PATH: U:\PSO\Projects\Clients\1598-Tulalip Tribes\216-1598-102 MBR Upgrade\99Svcs\CAD0\DWG
PLOTTED BY: peterden DATE: Friday, February 23, 2018 2:50:34 PM
LAYOUT: E5

NAME: SUBSTATION A — v 1.1

VOLTAGE: 480 — NEUTRAL BUS: YES — LOCATION: QUIL CEDA WWTP

GROUND BUS: YES — FED FROM: SERVICE ENTRANCE

PHASE: 3 — MAIN BREAKER SIZE: 3,200 AMPS — FEED (OCPD SIZE):

WIRE: 4 — MINIMUM BUS SIZE: 4,000 AMPS — ENCLOSURE TYPE: NEMA 3R

HERTZ: 60 — FAULT CURRENT BRACING: 65,000 AMPS, RMS SYMMETRICAL — SPECIFICATION:

ASSET NUMBER	EQUIPMENT NAME OR LOAD DESCRIPTION	CONNECTED LOAD							LOAD TYPE	LTG	RCPT	MOTOR	HVAC	MISC	LARGEST MOTOR
		LOAD SIZE	LOAD UNIT	VOLT	PH	HP	AMPS	KVA							
MCC 1A	MOTOR CONTROL CENTER 1A					0.0	0.0	0.0		8.8	0.3	**25.2**	21.7	1.7	6.3
MCC 2A	MOTOR CONTROL CENTER 2A					0.0	0.0	0.0		15.1	2.7	**33.0**	17.9	11.7	129.7
MCC 3A	**MOTOR CONTROL CENTER 3A**					**0.0**	**0.0**	**0.0**		**0.0**	**0.0**	**34.0**	**0.0**	**0.0**	**129.7**
MCC 4A	MOTOR CONTROL CENTER 4A (FUTURE)					0.0	0.0	0.0		0.0	0.0	0.0	0.0	0.0	0.0
MCC 5A	MOTOR CONTROL CENTER 5A					0.0	0.0	0.0		2.9	2.4	39.5	2.9	27.0	54.8
MCC 6A	MOTOR CONTROL CENTER 6A					0.0	0.0	0.0		1.5	0.7	0.0	22.1	0.2	130.4
MCC 1B	MOTOR CONTROL CENTER 1B					0.0	0.0	0.0		0.0	0.0	**13.7**	9.2	0.0	6.3
MCC 2B	MOTOR CONTROL CENTER 2B					0.0	0.0	0.0		0.0	0.0	**25.9**	30.0	15.0	129.7
MCC 3B	**MOTOR CONTROL CENTER 3B**					**0.0**	**0.0**	**0.0**		**0.0**	**0.0**	**27.7**	**0.0**	**0.0**	**129.7**
MCC 4B	MOTOR CONTROL CENTER 4B (FUTURE)					0.0	0.0	0.0		0.0	0.0	0.0	0.0	0.0	0.0
MCC 5B	MOTOR CONTROL CENTER 5B					0.0	0.0	0.0		0.0	0.0	36.1	3.0	38.0	54.0
MCC 6B	MOTOR CONTROL CENTER 6B (FUTURE)					0.0	0.0	0.0		0.0	0.0	0.0	0.0	0.0	0.0
MCC-200	88TH ST PUMP STATION					0.0	0.0	0.0		0.0	0.0	126.7	0.0	17.0	103.1
						0.0	0.0	0.0		0.0	0.0	0.0	0.0	0.0	0.0
						0.0	0.0	0.0		0.0	0.0	0.0	0.0	0.0	0.0
	Connected Totals:									**28.27**	**6.04**	**361.87**	**106.93**	**110.53**	**873.83**

SUBSTATION A LOAD CALCULATION:

		CONNECTED KVA	METHOD	NEC DEMAND	CALC. KVA
TOTAL LIGHTING (L) LOAD:	L	**28.27**	ALL @	100%	**28.27**
TOTAL RECEPTACLE (R) LOAD:	R	**6.04**	FIRST 10KVA @	100%	**6.04**
			REMAINDER OVER 10KVA	50%	**0.00**
TOTAL MOTOR (M) LOAD:	M	**361.87**	ALL @	100%	**361.87**
	LM	**873.83**	125% OF LARGEST	125%	**1092.29**
TOTAL HVAC (H) LOAD:	H	**106.93**	ALL @	100%	**106.93**
TOTAL MISCELLANEOUS (X) LOAD:	X	**110.53**	ALL @	100%	**110.53**
TOTAL KVA:		**1487.48 KVA**			**1705.93 KVA**
AVERAGE AMPS @	480 volts	**1789.16 AMPS**		(1)	**2051.92 AMPS**

KEY NOTES:

(1) GENERATOR LOAD SHEDDING / INTERLOCKING TO BE PROVIDED BY THE PROGRAMMER. UPDATED GENERATOR LOAD CALCULATIONS TO BE COMPLETED THEREAFTER.

PROJECT WORK SHOWN ON THIS DRAWING IS ALL INCLUDED IN SCHEDULE A

PATH: U:\PSO\Projects\Clients\1598-TulalipTribes\216-1598-102 MBR Upgrade\99Svcs\CADD\DWG — PLOTTED BY: peterden — DATE: Friday, February 23, 2018 1:43:18 PM — LAYOUT: E6

REVISIONS	DATE	BY

DESIGNED B. WILLIAMS
DRAWN D. PETERSON
CHECKED R. ROHLER
APPROVED B. BUNKER

ONE INCH AT FULL SCALE. IF NOT, SCALE ACCORDINGLY
FILE NAME PS1598102-E6
JOB No. 216-1598-102
DATE FEBRUARY 2018

ARTHUR G. STOKES — STATE OF WASHINGTON — 34736 — REGISTERED PROFESSIONAL ENGINEER

FEBRUARY 23, 2018

Parametrix
ENGINEERING . PLANNING . ENVIRONMENTAL SCIENCES
1019 39TH AVENUE SE, SUITE 100 | PUYALLUP, WA 98374
P 253.604.6600
WWW.PARAMETRIX.COM

PROJECT NAME
THE CONSOLIDATED BOROUGH OF QUIL CEDA VILLAGE MBR TREATMENT FACILITY UPGRADE
TULALIP, WASHINGTON

PLANT LOAD CALCULATION SUBSTATION A & GENERATOR LOAD SHED

DRAWING NO. 53 OF 157

E6

CIRCUIT SCHEDULE

CIRCUIT NUMBER	CONDUIT SIZE	WIRE FILL	FROM	TO	ROUTING	REMARKS
Substation A						
Plan Sheet E5						
P1282	4"	TC: (3)#350 KCM, (1)#1G	Substation A, Section C7	MCC-3B, 5E	P1282, CABLE TRAY #18, 1, 3	NEW CONDUCTORS, EXISTING CONDUIT.
P1283	4"	TC: (3)#350 KCM, (1)#1G	Substation A, Section C7	MCC-3B, 5E	P1283, CABLE TRAY #18, 1, 3	NEW CONDUCTORS, EXISTING CONDUIT.
P1292	4"	TC: (3)#350 KCM, (1)#1G	Substation A, Section C4	MCC-3A, 1E	P1292, CABLE TRAY #17, 1, 3	NEW CONDUCTORS, EXISTING CONDUIT.
P1293	4"	TC: (3)#350 KCM, (1)#1G	Substation A, Section C4	MCC-3A, 1E	P1293, CABLE TRAY #17, 1, 3	NEW CONDUCTORS, EXISTING CONDUIT.
Headworks						
Plan Sheet E103						
P1802	1"	TC: (3)#12, 1#12G	MCC-1A, 2F	V-1802	CABLE TRAY #1, 3, 4, P1802	
C1800	2"	TC: (16)#14, (1)#14G	MCC-1B, 5D	LCP-1000	CABLE TRAY #1	SEE SHEET E9.
C1802	1"	TC: (18)#14, (1)#14G	LCP-1000	V-1802	CABLE TRAY #1, 3, 4, C1802	SEE I SHEETS FOR VALVE I/O.
Plan Sheet E104						
J1051	1"	(1)TSP	LCP-1000	LIT-1606	CABLE TRAY #2, 3, 4, 5, J1051	
J1052	1"	(1)TSP	LIT-606	LE-1804	CABLE TRAY #5, J1052	NEW CONDUCTORS, EXISTING CONDUIT.
C1075	1"	TC: (20)#14, (1)#14G	LCP-1000	LCP-1606	CABLE TRAY #2, 3, 4, C1075	NEW CONDUCTORS, EXISTING CONDUIT. SEE I SHEETS FOR SCREEN I/O.
P1155	1"	TC: (3)#12, (1)#12G	MCC-1B, 4B	LCP-1606	CABLE TRAY #1, 3, 4, P1155	NEW CONDUCTORS, EXISTING CONDUIT.
P1600	1"	(1)MFR CABLE	LCP-1606	ME-1600	P1600	
C1600	1"	(4)#14, (1)#14G	LCP-1606	SV-1602, ZSC-1607	C1600	
J1603	1"	(1)MFR CABLE	LCP-1606	LE-1603	J1603	
P1803	1"	TC: (3)#12, (1)#12G	MCC-1B, 5D	HS-1803	CABLE TRAY #1, 3, 4, P1803	NEW CONDUCTORS, EXISTING CONDUIT.
C1803	1"	TC: (8)#14, (1)#14G	MCC-1B, 5D	HS-1803	CABLE TRAY #1, 3, 4, C1803	NEW CONDUCTORS, EXISTING CONDUIT. EXISTING CIRCUIT NUMBERS UNKOWN, RELABEL AS SHOWN. SEE SHEET E8.
PC1803	1"	(1)MFR CABLE	HS-1803	M-1803	PC1803	SEPARATE OVERTEMP AND SEAL FAIL CONDUCTORS FROM POWER IN HS-1803.
P1805	1"	TC: (2)#12, (1)#12G	LP-1000, CKT. 7	DOT-1805	CABLE TRAY #2, 3, 4, P1805	NEW CONDUCTORS, EXISTING CONDUIT. EXISTING CIRCUIT NUMBERS UNKOWN, RELABEL AS SHOWN.
J1805	1"	(1)TSP	LCP-1000	DOT-1805	CABLE TRAY #2, 3, 4, J1805	NEW CONDUCTORS, EXISTING CONDUIT. EXISTING CIRCUIT NUMBERS UNKOWN, RELABEL AS SHOWN.
J1805A	1"	(1)MFR CABLE	DOT-1805	DOE-1805	J1805A	
MBR						
Plan Sheet E207						
P2104	3/4"	TC: (2)#12, (1)#12G	IP-2001 Ckt. 3	FIT-2104	CABLE TRAY #4, 5, 12, 13, P2104	
J2104	3/4"	(1)TSP	LCP-2023	FIT-2104	CABLE TRAY #9, 7, 17, 10, 8, J2104	
P2125	2"	VFD: (3)#250 KCM, (1)#4G	VFD-2127	ME-2125	CABLE TRAY #4, 5, P2125	
C2125	3/4"	TC: (8)#14, (1)#14G	VFD-2127	ME-2125	CABLE TRAY #4, 5, C2125	SEE SHEET E10.
P2111	3/4"	REPLACE IN KIND IF NECESSARY	IP-2001, CKT. 3	FIT-2111	SAME AS EXISTING	EXISTING CIRCUIT NUMBERS UNKNOWN, RELABEL AS SHOWN. EXTEND EXISTING CONDUIT TO NEW FLOW METER LOCATION. PULL NEW CONDUCTORS IF EXISTING CONDUCTORS ARE NOT LONG ENOUGH.
J2111	3/4"	REPLACE IN KIND IF NECESSARY	LCP-2023	FIT-2111	SAME AS EXISTING	EXISTING CIRCUIT NUMBERS UNKNOWN, RELABEL AS SHOWN. EXTEND EXISTING CONDUIT TO NEW FLOW METER LOCATION. PULL NEW CONDUCTORS IF EXISTING CONDUCTORS ARE NOT LONG ENOUGH.
C2100	3/4"	TC: (8)#14, (1)#14G	MCC-3A, 2G: VFD-2106	HS-2100	CABLE TRAY #3, 4, 5, C2100	SEE SHEET E10.
PC2100	3/4"	VFD: (3)#12, (1)#12G & TC: (2)#14, (1)#14G	MCC-3A, 2G: VFD-2106	P-2100	CABLE TRAY #3, 4, 5, PC2100	SEE SHEET E10.
C2128	3/4"	TC: (4)#14, (1)#14G	VFD-2127	HS-2128	CABLE TRAY #4, 5, C2128	SEE SHEET E10.
C2150	3/4"	TC: (8)#14, (1)#14G	MCC-3A, 2N: VFD-2150	HS-2150	CABLE TRAY #3, 4, 5, C2150	SEE SHEET E10.
PC2150	3/4"	VFD: (3)#12, (1)#12G & TC: (2)#14, (1)#14G	MCC-3A, 2N: VFD-2150	P-2150	CABLE TRAY #3, 4, 5, PC2150	SEE SHEET E10.
C2175	3/4"	TC: (8)#14, (1)#14G	MCC-3B, 6G: VFD-2175	HS-2175	CABLE TRAY #3, 4, 5, C2175	SEE SHEET E10.
PC2175	3/4"	VFD: (3)#12, (1)#12G & TC: (2)#14, (1)#14G	MCC-3B, 6G: VFD-2175	P-2175	CABLE TRAY #3, 4, 5, PC2175	SEE SHEET E10.
P2200	2"	VFD: (3)#250 KCM, (1)#4G	VFD-2227	ME-2200	CABLE TRAY #4, 5, P2200	
C2200	3/4"	TC: (8)#14, (1)#14G	VFD-2227	ME-2200	CABLE TRAY #4, 5, C2200	SEE SHEET E10.
C2228	3/4"	TC: (4)#14, (1)#14G	VFD-2227	HS-2228	CABLE TRAY #4, 5, C2228	SEE SHEET E10.
P2304	3/4"	REPLACE IN KIND IF NECESSARY	IP-2001, CKT. 2	FIT-2304	SAME AS EXISTING	EXISTING CIRCUIT NUMBERS UNKNOWN, RELABEL AS SHOWN. EXTEND EXISTING CONDUIT TO NEW FLOW METER LOCATION. PULL NEW CONDUCTORS IF EXISTING CONDUCTORS ARE NOT LONG ENOUGH.
J2304	3/4"	REPLACE IN KIND IF NECESSARY	LCP-2023	FIT-2304	SAME AS EXISTING	EXISTING CIRCUIT NUMBERS UNKNOWN, RELABEL AS SHOWN. EXTEND EXISTING CONDUIT TO NEW FLOW METER LOCATION. PULL NEW CONDUCTORS IF EXISTING CONDUCTORS ARE NOT LONG ENOUGH.
P2313	3/4"	TC: (2)#12, (1)#12G	IP-2001, CKT. 7	FIT-2313	CABLE TRAY #4, 3, 11, 14, P2313	
J2313	3/4"	(1)TSP	LCP-2023	FIT-2313	CABLE TRAY #9, 7, 16, J2313	
P2417	3/4"	REPLACE IN KIND IF NECESSARY	IP-2001 CKT. 5	FIT-2417	SAME AS EXISTING	EXISTING CIRCUIT NUMBERS UNKNOWN, RELABEL AS SHOWN. EXTEND EXISTING CONDUIT TO NEW FLOW METER LOCATION. PULL NEW CONDUCTORS IF EXISTING CONDUCTORS ARE NOT LONG ENOUGH.
J2417	3/4"	REPLACE IN KIND IF NECESSARY	LCP-2023	FIT-2417	SAME AS EXISTING	EXISTING CIRCUIT NUMBERS UNKOWN, RELABEL AS SHOWN. EXTEND EXISTING CONDUIT TO NEW FLOW METER LOCATION. PULL NEW CONDUCTORS IF EXISTING CONDUCTORS ARE NOT LONG ENOUGH.
C2440	3/4"	TC: (8)#14, (1)#14G	MCC-3B, 7G: VFD-2440	HS-2440	CABLE TRAY #3, 11, 14, C2440	SEE SHEET E10.
PC2440	3/4"	VFD: (3)#12, (1)#12G & TC: (2)#14, (1)#14G	MCC-3B, 7G: VFD-2440	P-2440	CABLE TRAY #3, 11, 14, PC2440	SEE SHEET E10.
P2441	3/4"	TC: (3)#12, (1)#12G	MCC-3B, 8K	FCV-2440	CABLE TRAY #3, 11, 14, P2441	
C2441	3/4"	TC: (18)#14, (1)#14G	LCP-2023	FCV-2440	CABLE TRAY # 9, 7, 16, 14, C2441	
J2441	3/4"	(1)TSP	LCP-2023	FCV-2440	CABLE TRAY # 9, 7, 16, 14, J2441	
P2500	3/4"	TC: (4)#12, (1)#12G	IP-2001, CKT. 25	XIT-2504, XIT-2505	CABLE TRAY #4, 3, 12, 13, P2500	
J2500	1"	(2)TSP	LCP-2014	XIT-2504, XIT-2505	CABLE TRAY #9, 7, 17, 8, J2500	PROVIDE (1)TSP TO EACH TURBIDITY TRANSMITTER.
C2503	3/4"	TC: (4)#14, (1)#14G	LCP-2014	V-2503: ZSO-2503, ZSC-2503	CABLE TRAY #5, 4, C2503	
J2504	3/4"	(1)MFR CABLE	XIT-2504	XE-2504	J2504	
J2505	3/4"	(1)MFR CABLE	XIT-2505	XE-2505	J2505	
P2517	3/4"	TC: (2)#12, (1)#12G	IP-2001, CKT. 10	FIT-2517	CABLE TRAY #4, 5, 12, 13, P2517	
J2517	3/4"	(1)TSP	LCP-2014	FIT-2517	CABLE TRAY #9, 7, 17, 8, J2517	
C2540	3/4"	TC: (8)#14, (1)#14G	MCC-3A, 3G: VFD-2540	HS-2540	CABLE TRAY # 3, 4, 5, 12, 13, C2540	SEE SHEET E10.
PC2540	3/4"	VFD: (3)#12, (1)#12G & TC: (2)#14, (1)#14G	MCC-3A, 3G: VFD-2540	P-2540	CABLE TRAY # 3, 4, 5, 12, 13, PC2540	SEE SHEET E10.
P2541	3/4"	TC: (3)#12, (1)#12G	MCC-3A, 4K	FCV-2540	CABLE TRAY #3, 4, 5, 12, 13, P2541	
C2541	3/4"	TC: (18)#14, (1)#14G	LCP-2014	FCV-2540	CABLE TRAY # 9, 7, 17, 13, C2541	
J2541	3/4"	(1)TSP	LCP-2014	FCV-2540	CABLE TRAY # 9, 7, 17, 13, J2541	
P2600	3/4"	TC: (4)#12, (1)#12G	IP-2001, CKT. 27	XIT-2604, XIT-2605	CABLE TRAY #4, 3, 11, P2600	
J2600	1"	(2)TSP	LCP-2014	XIT-2604, XIT-2605	CABLE TRAY #9, 7, 16, J2600	PROVIDE (1)TSP TO EACH TURBIDITY TRANSMITTER.
C2503	3/4"	TC: (4)#14, (1)#14G	LCP-2014	V-2603: ZSO-2603, ZSC-2603	CABLE TRAY #5, 4, C2503	
J2604	3/4"	(1)MFR CABLE	XIT-2604	XE-2604	J2604	
J2605	3/4"	(1)MFR CABLE	XIT-2605	XE-2605	J2605	
P2617	3/4"	TC: (2)#12, (1)#12G	IP-2001, CKT. 12	FIT-2617	CABLE TRAY #4, 3, 11, 14, P2617	
J2617	3/4"	(1)TSP	LCP-2014	FIT-2617	CABLE TRAY #9, 7, 16, 6, J2617	
C2640	3/4"	TC: (8)#14, (1)#14G	MCC-3B, 7N: VFD-2640	HS-2640	CABLE TRAY #3, 11, 14, C2640	SEE SHEET E10.
PC2640	3/4"	VFD: (3)#12, (1)#12G & TC: (2)#14, (1)#14G	MCC-3B, 7N: VFD-2640	P-2640	CABLE TRAY #3, 11, 14, PC2640	SEE SHEET E10.
P2641	3/4"	TC: (3)#12, (1)#12G	MCC-3B, 8L	FCV-2640	CABLE TRAY # 3, 11, 14, P2641	
C2641	3/4"	TC: (18)#14, (1)#14G	LCP-2014	FCV-2640	CABLE TRAY #9, 7, 16, C2641	
J2641	3/4"	(1)TSP	LCP-2014	FCV-2640	CABLE TRAY #9, 7, 16, J2641	

NOTE:

1. THE CONDUIT ROUTING SCHEMES INDICATED ON SHEETS E207, E208, AND THIS SCHEDULE HAVE BEEN DEVELOPED TO ENSURE PROPER SEPARATION BETWEEN THE POWER CONDUCTORS AND THE CONTROL AND SIGNAL CONDUCTORS WHEREVER POSSIBLE. THE CONTRACTOR MAY PROPOSE ALTERNATIVE CONDUIT ROUTING FOR APPROVAL BY THE ENGINEER AS LONG AS THE FOLLOWING CONDITIONS ARE MET:
   a. CABLE TRAY SHALL BE UTILIZED WHENEVER POSSIBLE.
   b. SEPARATION BETWEEN NEW AND EXISTING POWER CONDUCTORS AND CONTROL AND SIGNAL CONDUCTORS SHALL BE MAINTAINED WHENEVER POSSIBLE.
2. CIRCUIT SCHEDULE IS NOT DIVIDED INTO SCHEDULE A & SCHEDULE B. SEE INDIVIDUAL SHEETS FOR SCHEDULE DESIGNATION.

PATH: U:\PSO\Projects\Clients\1598-TulalipTribes\216-1598-102 MBR Upgrade\99Scvs\CADD\DWG PLOTTED BY: peterden DATE: Friday, February 23, 2018 5:45:22 PM
LAYOUT: E7

REVISIONS	DATE	BY

DESIGNED B. WILLIAMS
DRAWN D. PETERSON
CHECKED R. ROHLER
APPROVED B. BUNKER

ONE INCH AT FULL SCALE. IF NOT, SCALE ACCORDINGLY
FILE NAME PS1598102-E7
JOB No. 216-1598-102
DATE FEBRUARY 2018

ARTHUR G. STOKES — STATE OF WASHINGTON — 34736 — REGISTERED PROFESSIONAL ENGINEER
FEBRUARY 23, 2018

Parametrix
ENGINEERING . PLANNING . ENVIRONMENTAL SCIENCES
1019 39TH AVENUE SE, SUITE 100 | PUYALLUP, WA 98374
P 253.604.6600
WWW.PARAMETRIX.COM

PROJECT NAME
THE CONSOLIDATED BOROUGH OF QUIL CEDA VILLAGE
MBR TREATMENT FACILITY UPGRADE
TULALIP, WASHINGTON

CONDUIT AND CABLE SCHEDULE

DRAWING NO. 54 OF 157
E7

CIRCUIT SCHEDULE

CIRCUIT NUMBER	CONDUIT SIZE	WIRE FILL	FROM	TO	ROUTING	REMARKS
P2717	3/4"	REPLACE IN KIND IF NECESSARY	IP-2001, CKT. XX	FIT-2717	SAME AS EXISTING	EXISTING CIRCUIT NUMBERS UNKOWN, RELABEL AS SHOWN. EXTEND EXISTING CONDUIT TO NEW FLOW METER LOCATION. PULL NEW CONDUCTORS IF EXISTING CONDUCTORS ARE NOT LONG ENOUGH.
J2717	3/4"	REPLACE IN KIND IF NECESSARY	LCP-2023	FIT-2717	SAME AS EXISTING	EXISTING CIRCUIT NUMBERS UNKOWN, RELABEL AS SHOWN. EXTEND EXISTING CONDUIT TO NEW FLOW METER LOCATION. PULL NEW CONDUCTORS IF EXISTING CONDUCTORS ARE NOT LONG ENOUGH.
C2740	3/4"	TC: (8)#14, (1)#14G	MCC-3A, 3N: VFD-2740	HS-2740	CABLE TRAY #3, 4, 5, 12, 13, 15, C2740	SEE SHEET E10.
PC2740	3/4"	VFD: (3)#12, (1)#12G & TC: (2)#14, (1)#14G	MCC-3A, 3N: VFD-2740	P-2740	CABLE TRAY #3, 4, 5, 12, 13, 15, PC2740	SEE SHEET E10.
P2741	3/4"	TC: (3)#12, (1)#12G	MCC-3A, 4L	FCV-2740	CABLE TRAY #3, 11, 14, P2741	
C2741	3/4"	TC: (18)#14, (1)#14G	LCP-2023	FCV-2740	CABLE TRAY #9, 7, 17, 15, C2741	
J2741	3/4"	(1)TSP	LCP-2023	FCV-2740	CABLE TRAY #9, 7, 17, 15, J2741	
P2939	3/4"	TC: (2)#12, (1)#12G	IP-2001, CKT. 17	LIT-2939	CABLE TRAY #4, 5, 7, P2939	
J2939	1"	(2)TSP	LCP-2014	LIT-2939	CABLE TRAY #9, 7, 5, J2939	
Plan Sheet E208						
P2000	3/4"	(2)#12, (1)#12G	LP-2001	LCP-2000	P2000	
C2011	2"	(40)#14, (1)#14G	MCC-3A	LCP-2000	C2011	
J2011	2"	(4)TSP, (2)CAT5E	MCC-3A	LCP-2000	J2011	
C2012	2"	(20)#14, (1)#14G	MCC-3B	LCP-2000	C2012	
J2012	2"	(2)TSP, (1)CAT5E	MCC-3B	LCP-2000	J2012	
C2013	2"	(40)#14, (1)#14G	MCC-3A	LCP-2014	C2013	
J2013	2"	(4)TSP, (2)CAT5E	MCC-3A	LCP-2014	J2013	
P2014	3/4"	(2)#12, (1)#12G	LP-2001	LCP-2014	P2014	
C2014	2"	(20)#14, (1)#14G	MCC-3B	LCP-2014	C2014	
J2014	2"	(2)TSP, (1)CAT5E	MCC-3B	LCP-2014	J2014	
C2015	2"	(20)#14, (1)#14G	MCC-3A	LCP-2023	C2015	
J2015	2"	(2)TSP, (1)CAT5E	MCC-3A	LCP-2023	J2015	
C2016	2"	(40)#14, (1)#14G	MCC-3B	LCP-2023	C2016	
J2016	2"	(4)TSP, (2)CAT5E	MCC-3B	LCP-2023	J2016	
P2023	3/4"	(2)#12, (1)#12G	LP-2001	LCP-2023	P2023	
P2050	3/4"	(2)#3, (1)#3G	IP-2001	UPS-2001	P2050	
P2050A	3/4"	(2)#3, (1)#3G	UPS-2001	LP-2001	P2050A	
P2060	3/4"	(2)#12, (1)#12G	LP-2001	CONTROL ROOM POWER STRIP	P2060	
P2070	3/4"	(2)#12, (1)#12G	LP-2001	CONTROL ROOM BUSINESS PC	P2070	
P2127	2"	(3)#250, (1)#4G	MCC-3A, 1J	VFD-2127	CABLE TRAY #3, 4	
C2127	1"	(16)#14, (1)#14G	LCP-2000	VFD-2127	C2127	SEE SHEET E10.
J2127	1.5"	(2)TSP, (1)CAT5E	LCP-2000	VFD-2127	J2127	SEE SHEET E10.
P2131	3/4"	TC: (3)#12, (1)#12G	MCC-3A, 1F	FCV-2131	CABLE TRAY #3, 4, 5, 12, 8, P2131	
C2131	3/4"	TC: (18)#14, (1)#14G	LCP-2000	FCV-2131	CABLE TRAY #9, 7, 17, 10, 8, C2131	
J2131	3/4"	(1)TSP	LCP-2000	FCV-2131	CABLE TRAY #9, 7, 17, 10, 8, J2131	
P2133	3/4"	TC: (2)#12, (1)#12G	IP-2001, CKT. 9	FIT-2133	CABLE TRAY #4, 5, 12, 13, P2133	
J2133	3/4"	(1)TSP	LCP-2000	FIT-2133	CABLE TRAY #9, 7, 17, 10, 8, J2133	
J2134	3/4"	(1)TSP	LCP-2000	PT-2134	CABLE TRAY #9, 7, 17, 8, J2134	
P2227	2"	(3)#250, (1)#4G	MCC-3B, 5J	VFD-2227	CABLE TRAY #3, 4	
C2227	1"	(16)#14, (1)#14G	LCP-2000	VFD-2227	C2227	SEE SHEET E10.
J2227	1.5"	(2)TSP, (1)CAT5E	LCP-2000	VFD-2227	J2227	SEE SHEET E10.
P2231	3/4"	TC: (3)#12, (1)#12G	MCC-3B, 5F	FCV-2231	CABLE TRAY #3, 4, 5, 12, 8, P2231	
C2231	3/4"	TC: (18)#14, (1)#14G	LCP-2000	FCV-2231	CABLE TRAY #9, 7, 17, 10, 8, C2231	
J2231	3/4"	(1)TSP	LCP-2000	FCV-2231	CABLE TRAY #9, 7, 17, 10, 8, J2231	
C2327	1"	(16)#14, (1)#14G	VFD-2327	LCP-2000	C2327	
J2327	1.5"	(2)TSP, (1)CAT5E	VFD-2327	LCP-2000	J2327	
P2331	3/4"	TC: (3)#12, (1)#12G	MCC-3A, 1G	FCV-2331	CABLE TRAY #3, 11, 6, P2331	,
C2331	3/4"	TC: (18)#14, (1)#14G	LCP-2000	FCV-2331	CABLE TRAY #9, 7, 16, 6, C2331	
J2331	3/4"	(1)TSP	LCP-2000	FCV-2331	CABLE TRAY #9, 7, 16, 6, J2331	
P2406	1"	REPLACE IN KIND IF NECESSARY	MCC-2B	V-2406	SAME AS EXISTING	EXISTING CIRCUIT NUMBERS UNKNOWN, RELABEL AS SHOWN. EXTEND EXISTING CONDUIT TO NEW VALVE LOCATION. PULL NEW CONDUCTORS IF EXISTING CONDUCTORS ARE NOT LONG ENOUGH.
J2406	1"	REPLACE IN KIND IF NECESSARY	LCP-2023	V-2406	SAME AS EXISTING	EXISTING CIRCUIT NUMBERS UNKNOWN, RELABEL AS SHOWN. EXTEND EXISTING CONDUIT TO NEW VALVE LOCATION. PULL NEW CONDUCTORS IF EXISTING CONDUCTORS ARE NOT LONG ENOUGH.
C2427	1"	(16)#14, (1)#14G	VFD-2427	LCP-2000	C2427	
J2427	1.5"	(2)TSP, (1)CAT5E	VFD-2427	LCP-2000	J2427	
P2431	3/4"	TC: (3)#12, (1)#12G	MCC-3B, 5G	FCV-2431	CABLE TRAY #3, 11, 6, P2431	
C2431	3/4"	TC: (18)#14, (1)#14G	LCP-2000	FCV-2431	CABLE TRAY #9, 7, 16, 6, C2431	
J2431	3/4"	(1)TSP	LCP-2000	FCV-2431	CABLE TRAY #9, 7, 16, 6, J2431	
P2433	3/4"	TC: (2)#12, (1)#12G	IP-2001, CKT. 11	FIT-2433	CABLE TRAY #4, 3, 11, 6, P2433	
J2433	3/4"	(1)TSP	LCP-2000	FIT-2433	CABLE TRAY #9, 7, 16, 6, J2433	
J2434	3/4"	(1)TSP	LCP-2000	PT-2434	CABLE TRAY #9, 7, 16, 6, J2434	
P2506	3/4"	TC: (3)#12, (1)#12G	MCC-3A, 4N	V-2506	CABLE TRAY #3, 4, 5, 12, 8, P2506	
C2506	3/4"	TC: (18)#14, (1)#G	LCP-2014	V-2506	CABLE TRAY #9, 7, 17, 8, C2506	
J2518	3/4"	(1)TSP	LCP-2014	PT-2517	CABLE TRAY #9, 7, 17, 8, J2518	
P2606	3/4"	TC: (3)#12, (1)#12G	MCC-3B, 8N	V-2606	CABLE TRAY #3, 11, 6, P2606	
C2606	3/4"	TC: (18)#14, (1)#G	LCP-2014	V-2606	CABLE TRAY #9, 7, 16, 6, C2606	
J2618	3/4"	(1)TSP	LCP-2014	PT-2617	CABLE TRAY #9, 7, 16, 6, J2618	
P2706	1"	REPLACE IN KIND IF NECESSARY	MCC-2A	V-2706	SAME AS EXISTING	EXISTING CIRCUIT NUMBERS UNKNOWN, RELABEL AS SHOWN. EXTEND EXISTING CONDUIT TO NEW VALVE LOCATION. PULL NEW CONDUCTORS IF EXISTING CONDUCTORS ARE NOT LONG ENOUGH.
J2706	1"	REPLACE IN KIND IF NECESSARY	LCP-2023	V-2706	SAME AS EXISTING	EXISTING CIRCUIT NUMBERS UNKNOWN, RELABEL AS SHOWN. EXTEND EXISTING CONDUIT TO NEW VALVE LOCATION. PULL NEW CONDUCTORS IF EXISTING CONDUCTORS ARE NOT LONG ENOUGH.
Plan Sheet E209						
C2159	3/4"	TC: (2)#14, (1)#14G	LCP-2014	LSL-2508	AS REQUIRED	NEW CONDUCTORS, EXISTING CONDUIT. EXISTING CONDUIT ROUTING IS UNKNOWN, EXTEND CIRCUIT AS REQUIRED TO TERMINATION POINT.
C2161	3/4"	TC: (2)#14, (1)#14G	LCP-2023	LSL-2708	AS REQUIRED	NEW CONDUCTORS, EXISTING CONDUIT. EXISTING CONDUIT ROUTING IS UNKNOWN, EXTEND CIRCUIT AS REQUIRED TO TERMINATION POINT.
C2163	3/4"	TC: (2)#14, (1)#14G	LCP-2023	LSL-2408	AS REQUIRED	NEW CONDUCTORS, EXISTING CONDUIT. EXISTING CONDUIT ROUTING IS UNKNOWN, EXTEND CIRCUIT AS REQUIRED TO TERMINATION POINT.
C2165	3/4"	TC: (2)#14, (1)#14G	LCP-2014	LSL-2608	AS REQUIRED	NEW CONDUCTORS, EXISTING CONDUIT. EXISTING CONDUIT ROUTING IS UNKNOWN, EXTEND CIRCUIT AS REQUIRED TO TERMINATION POINT.
J2050	3/4"	(1)MFR CABLE	LE-2508	LIT-2939	AS REQUIRED	NEW CONDUCTORS, EXISTING CONDUIT. EXISTING CONDUIT ROUTING IS UNKNOWN, EXTEND CIRCUIT AS REQUIRED TO TERMINATION POINT.
J2056	3/4"	(1)MFR CABLE	LE-2608	LIT-2939	AS REQUIRED	NEW CONDUCTORS, EXISTING CONDUIT. EXISTING CONDUIT ROUTING IS UNKNOWN, EXTEND CIRCUIT AS REQUIRED TO TERMINATION POINT.

NOTE:

1. THE CONDUIT ROUTING SCHEMES INDICATED ON SHEETS E207, E208, AND THIS SCHEDULE HAVE BEEN DEVELOPED TO ENSURE PROPER SEPARATION BETWEEN THE POWER CONDUCTORS AND THE CONTROL AND SIGNAL CONDUCTORS WHEREVER POSSIBLE. THE CONTRACTOR MAY PROPOSE ALTERNATIVE CONDUIT ROUTING FOR APPROVAL BY THE ENGINEER AS LONG AS THE FOLLOWING CONDITIONS ARE MET:
   a. CABLE TRAY SHALL BE UTILIZED WHENEVER POSSIBLE.
   b. SEPARATION BETWEEN NEW AND EXISTING POWER CONDUCTORS AND CONTROL AND SIGNAL CONDUCTORS SHALL BE MAINTAINED WHENEVER POSSIBLE.
2. CIRCUIT SCHEDULE IS NOT DIVIDED INTO SCHEDULE A & SCHEDULE B. SEE INDIVIDUAL SHEETS FOR SCHEDULE DESIGNATION.

PATH: U:\PSO\Projects\Clients\1598-TulalipTribes\216-1598-102 MBR Upgrade\99Svcs\CADD\DWG PLOTTED BY: peterden DATE: Friday, February 23, 2018 5:46:30 PM
LAYOUT: E8

REVISIONS	DATE	BY

DESIGNED B. WILLIAMS
DRAWN D. PETERSON
CHECKED R. ROHLER
APPROVED B. BUNKER

ONE INCH AT FULL SCALE. IF NOT, SCALE ACCORDINGLY
FILE NAME PS1598102-E8
JOB No. 216-1598-102
DATE FEBRUARY 2018

ARTHUR G. STOKES — STATE OF WASHINGTON — 34736 — REGISTERED PROFESSIONAL ENGINEER
FEBRUARY 23, 2018

Parametrix
ENGINEERING . PLANNING . ENVIRONMENTAL SCIENCES
1019 39TH AVENUE SE, SUITE 100 | PUYALLUP, WA 98374
P 253.604.6600
WWW.PARAMETRIX.COM

PROJECT NAME
THE CONSOLIDATED BOROUGH OF QUIL CEDA VILLAGE
MBR TREATMENT FACILITY UPGRADE
TULALIP, WASHINGTON

CONDUIT AND CABLE SCHEDULE

DRAWING NO. 55 OF 157
E8

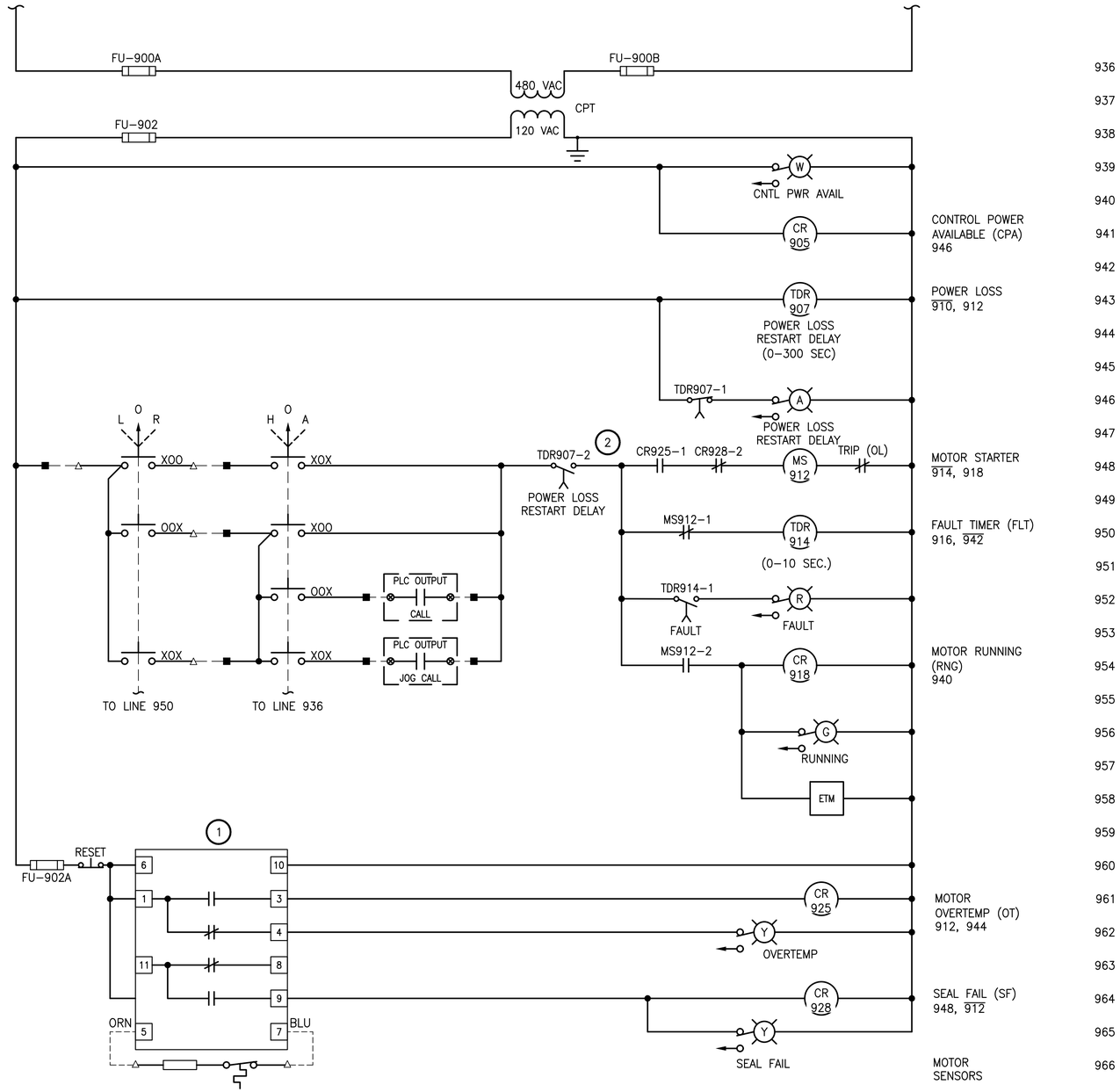

PLC INPUTS

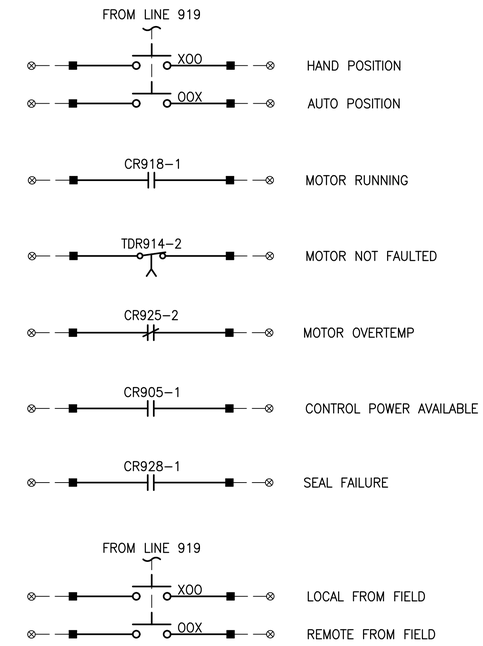

KEY NOTES:

1. FLYGT MINICAS/FUS RELAY COMBINING MOISTURE AND OVER TEMP. INSTALL IN MCC.
2. STAGGER THE TIME DELAYS OF ALL MCC POWER LOSS RELAYS BY 3 SECONDS TO MINIMIZE THE STARTING IMPACT ON THE GENERATOR. COORDINATE TIME DELAYS WITH EQUIPMENT SHOWN ON SHEET E10.

WIRE TERMINATION SYMBOL:

- ■ MCC TERMINAL
- ⊗ PLC TERMINAL
- □ MOTOR TERMINAL
- — — FIELD WIRING
- △ JUNCTION BOX TERMINAL OR EQUIPMENT

NUMBER	NAME	PLC PANEL ⊗	MOTOR PROTECTION
M-1803	ANOXIC TANK #2 MIXER	LCP-1000	TSH/MSH-1905
P-2225	PLANT DRAIN PS PUMP #1	LCP-2000	TSH/MSH-2225
P-2226	PLANT DRAIN PS PUMP #2	LCP-2000	TSH/MSH-2226

(1)

PROJECT WORK SHOWN ON THIS DRAWING IS ALL INCLUDED IN SCHEDULE A

REVISIONS	DATE	BY

DESIGNED B. WILLIAMS
DRAWN D. PETERSON
CHECKED R. ROHLER
APPROVED B. BUNKER

ONE INCH AT FULL SCALE. IF NOT, SCALE ACCORDINGLY

FILE NAME PS1598102-E9
JOB No. 216-1598-102
DATE FEBRUARY 2018

ARTHUR G. STOKEY — STATE OF WASHINGTON — 34736 — REGISTERED PROFESSIONAL ENGINEER

FEBRUARY 23, 2018

Parametrix
ENGINEERING . PLANNING . ENVIRONMENTAL SCIENCES
1019 39TH AVENUE SE, SUITE 100 | PUYALLUP, WA 98374
P 253.604.6600
WWW.PARAMETRIX.COM

PROJECT NAME
THE CONSOLIDATED BOROUGH OF QUIL CEDA VILLAGE
MBR TREATMENT FACILITY UPGRADE
TULALIP, WASHINGTON

SUBMERSIBLE PUMPS AND MIXER LOAD ELEMENTARY

DRAWING NO. 56 OF 157

E9

PATH: U:\PSO\Projects\Clients\1598-TulalipTribes\216-1598-102 MBR Upgrade\99Svcs\CADD\DWG PLOTTED BY: peterden DATE: Friday, February 23, 2018 12:54:52 PM LAYOUT: E9

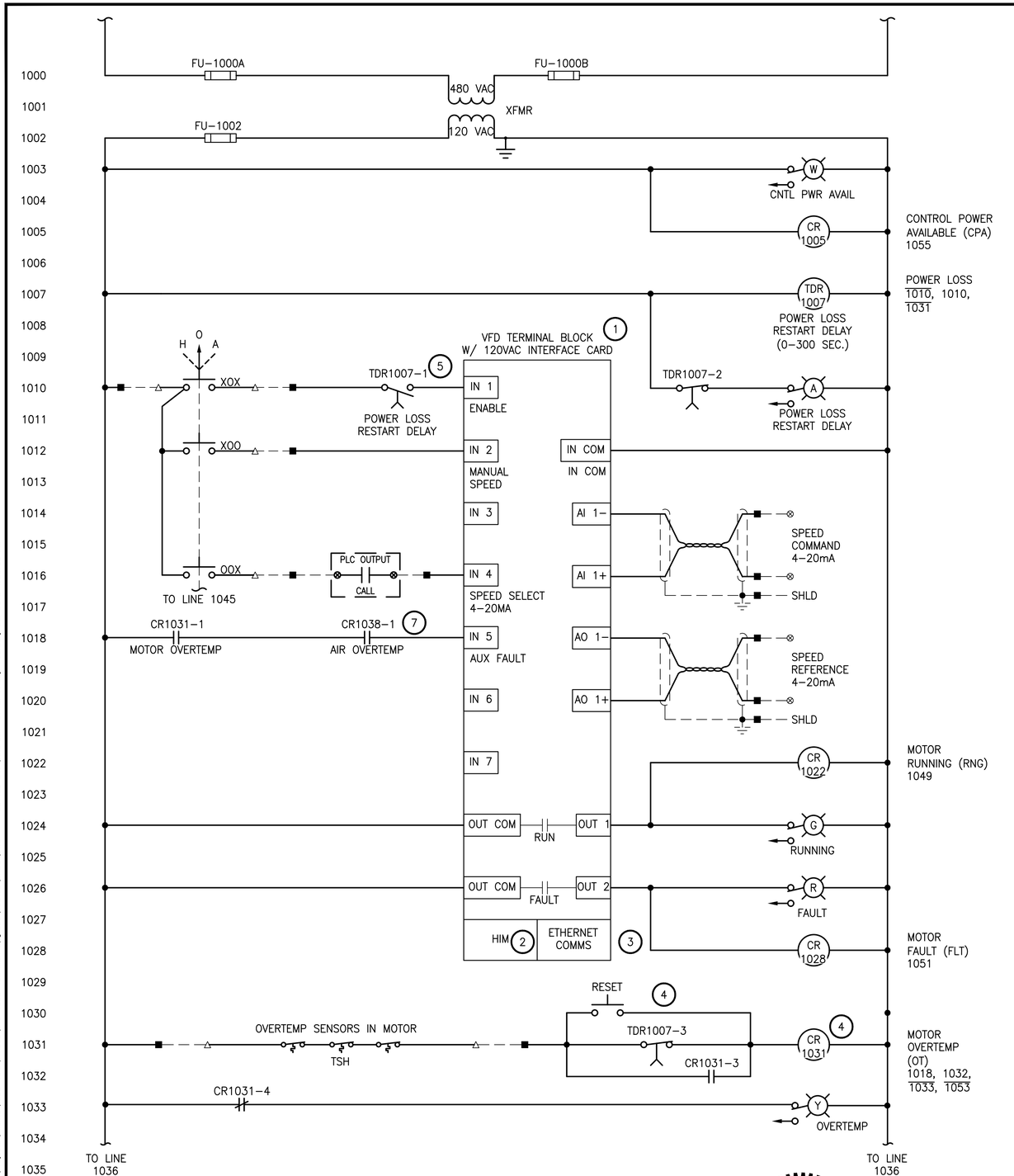

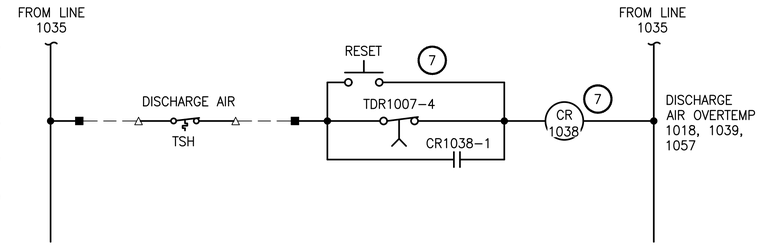

PLC INPUTS

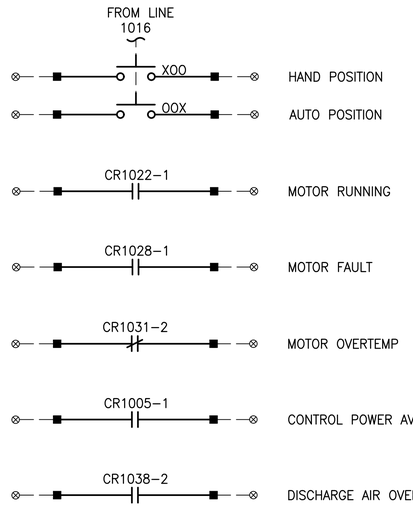

KEY NOTES:

1. VFD WIRING SCHEMATIC IS ONLY GENERAL, TO SHOW REQUIRED FUNCTIONS. ACTUAL VFD WIRING MAY VARY DEPENDING ON MANUFACTURER SUPPLIED. VFD TO BE WIRED PER MANUFACTURER SPECIFICATIONS.
2. PROVIDE HIM ACCESSIBLE TO OPERATOR ON OUTSIDE OF ENCLOSURE.
3. PROVIDE ETHERNET COMMUNICATIONS THAT SUPPORTS INDUSTRIAL PROTOCOL: ETHERNET/IP.
4. TEMPERATURE SWITCHES EMBEDDED IN MOTOR WINDINGS. PROVIDE SEAL-IN CIRCUIT DESIGNED TO MAINTAIN INTERLOCK UNTIL RESET PB IS OPERATED.
5. STAGGER THE TIME DELAYS OF ALL MCC POWER LOSS RELAYS BY 3 SECONDS TO MINIMIZE THE STARTING IMPACT ON THE GENERATOR. COORDINATE TIME DELAYS WITH EQUIPMENT SHOWN ON SHEET E9.
6. BLOWERS ARE POSITIVE DISPLACEMENT TYPE. VFD'S SHALL BE OF CONSTANT TORQUE RATING.
7. DISCHARGE AIR TEMPERATURE SWITCHES FOR AIR BLOWERS ONLY. PROVIDE SEAL-IN CIRCUIT DESIGNED TO MAINTAIN INTERLOCK UNTIL RESET PB IS OPERATED.

PROJECT WORK SHOWN ON THIS DRAWING IS ALL INCLUDED IN SCHEDULE B

NUMBER	NAME	PLC PANEL ⊗	MOTOR PROTECTION
P-2540	MBR #1 PERMEATE PUMP	LCP-2014	TSH-2540
P-2440	MBR #2 PERMEATE PUMP	LCP-2023	TSH-2440
P-2740	MBR #3 PERMEATE PUMP	LCP-2023	TSH-2740
P-2640	MBR #4 PERMEATE PUMP	LCP-2014	TSH-2640
P-2100	MIXED LIQUOR RECYCLE PUMP #1	LCP-2014	TSH-2100
P-2150	MIXED LIQUOR BACKUP RECYCLE PUMP	LCP-2000	TSH-2150
P-2175	MIXED LIQUOR RECYCLE PUMP #3	LCP-2023	TSH-2175
ME-2125	MBR #1 & #3 AIR BLOWER #1	LCP-2000	TSH-2140
ME-2200	MBR #1 & #3 AIR BLOWER #3	LCP-2000	TSH-2240

(6) (4)

LEGEND

- ■ VFD/MCC ENCLOSURE TERMINAL
- ⊗ PLC TERMINAL
- — — — FIELD WIRING
- △ JUNCTION BOX TERMINAL OR EQUIPMENT

REVISIONS	DATE	BY

DESIGNED B. WILLIAMS
DRAWN D. PETERSON
CHECKED R. ROHLER
APPROVED B. BUNKER

ONE INCH AT FULL SCALE. IF NOT, SCALE ACCORDINGLY
FILE NAME PS1598102-E10
JOB No. 216-1598-102
DATE FEBRUARY 2018

ARTHUR G. STORK — STATE OF WASHINGTON — 54736 — REGISTERED PROFESSIONAL ENGINEER

FEBRUARY 23, 2018

Parametrix
ENGINEERING . PLANNING . ENVIRONMENTAL SCIENCES
1019 39TH AVENUE SE, SUITE 100 | PUYALLUP, WA 98374
P 253.604.6600
WWW.PARAMETRIX.COM

PROJECT NAME
THE CONSOLIDATED BOROUGH OF QUIL CEDA VILLAGE
MBR TREATMENT FACILITY UPGRADE
TULALIP, WASHINGTON

TYPICAL VFD ELEMENTARY DIAGRAM

DRAWING NO. 57 OF 157
E10

PATH: U:\PSO\Projects\Clients\1598-TulalipTribes\216-1598-102 MBR Upgrade\99Svcs\CADD\DWG
PLOTTED BY: peterden DATE: Friday, February 23, 2018 4:26:05 PM
LAYOUT: E10

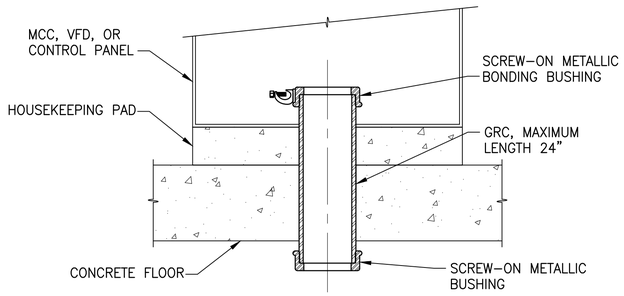

NOTES:

1. NO MORE THAN SIX CURRENT CARRYING CONDUCTORS PER PENETRATION USED FOR POWER WIRING. FOLLOW NEC GUIDELINES FOR CONDUIT FILL RATIO.
2. PROVIDE ADDITIONAL 25% CAPACITY PER PENETRATION USED FOR CONTROL WIRING.
3. SUPPORT IN CONCRETE AS NECESSARY.
4. GROUT IN PLACE.

MCC OR VFD FLOOR PENETRATION
DETAIL 1
NO SCALE –

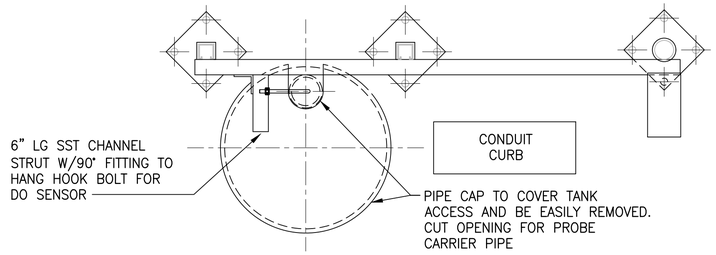

PLAN

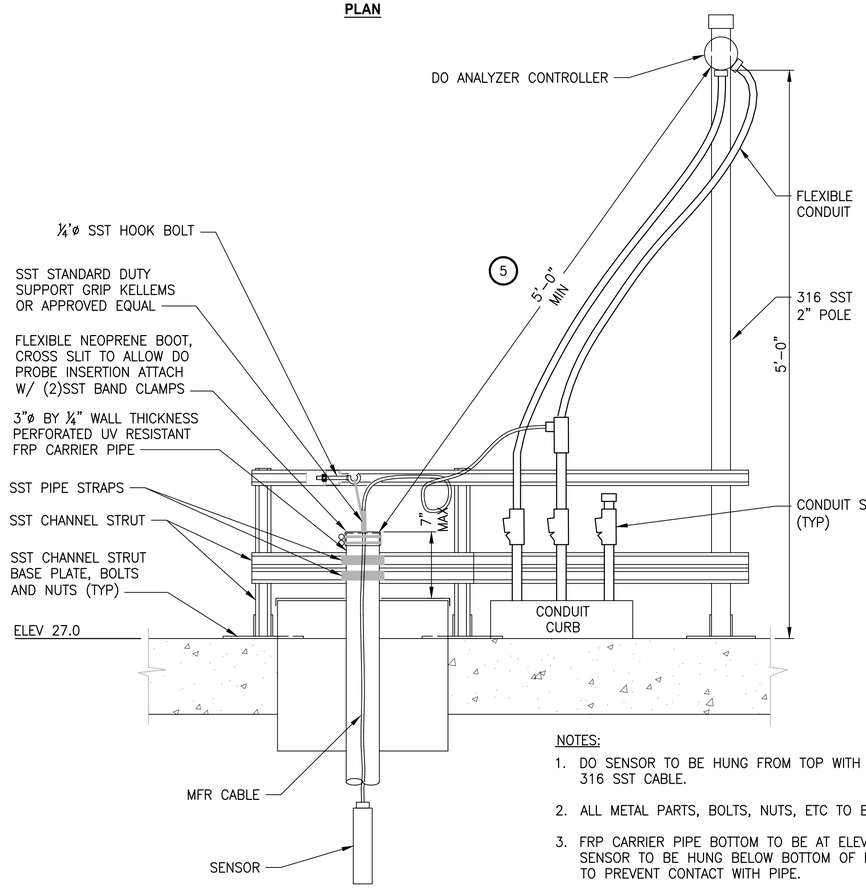

ELEVATION

NOTES:

1. DO SENSOR TO BE HUNG FROM TOP WITH 1/16"ø 7x7 316 SST CABLE.
2. ALL METAL PARTS, BOLTS, NUTS, ETC TO BE 316 SST.
3. FRP CARRIER PIPE BOTTOM TO BE AT ELEV 16.5. DO SENSOR TO BE HUNG BELOW BOTTOM OF FRP PIPE TO PREVENT CONTACT WITH PIPE.
4. DO SENSOR SUPPORT SYSTEM TO BE APPROVED BY MANUFACTURER.
5. MAINTAIN AT LEAST 5 FEET OF CLEARANCE BETWEEN THE DO ANALYZER CONTROLLER AND ANY PART OF THE FRP CARRIER PIPE.
6. INSTALL RAIN SHIELD ABOVE DO CONTROLLER IDENTICAL TO EXISTING INSTALLATIONS AT THE HEADWORKS FACILITY.

DO SENSOR AND CONTROLLER
DETAIL 3
1 1/2"=1'–0"

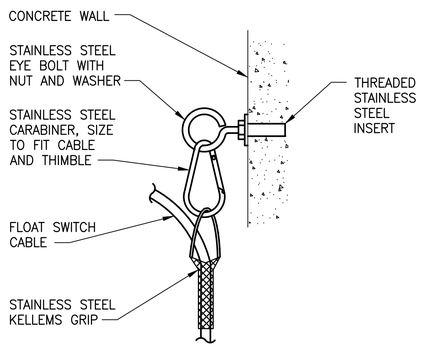

WALL CABLE ANCHOR
DETAIL 2
NO SCALE –

	REVISIONS	DATE	BY

DESIGNED B. WILLIAMS
DRAWN D. PETERSON
CHECKED R. ROHLER
APPROVED B. BUNKER

ONE INCH AT FULL SCALE. IF NOT, SCALE ACCORDINGLY
FILE NAME PS1598102–E11
JOB No. 216–1598–102
DATE FEBRUARY 2018

ARTHUR G. STOLEN — STATE OF WASHINGTON — 34736 — REGISTERED PROFESSIONAL ENGINEER

FEBRUARY 23, 2018

Parametrix
ENGINEERING . PLANNING . ENVIRONMENTAL SCIENCES
1019 39TH AVENUE SE, SUITE 100 | PUYALLUP, WA 98374
P 253.604.6600
WWW.PARAMETRIX.COM

PROJECT NAME
THE CONSOLIDATED BOROUGH OF QUIL CEDA VILLAGE MBR TREATMENT FACILITY UPGRADE
TULALIP, WASHINGTON

ELECTRICAL DETAILS

DRAWING NO. 58 OF 157
E11

PATH: U:\PSO\Projects\Clients\1598–TulalipTribes\216–1598–102 MBR Upgrade\99Scs\CADD\DWG PLOTTED BY: peterden DATE: Friday, February 23, 2018 12:43:50 PM
LAYOUT: E11

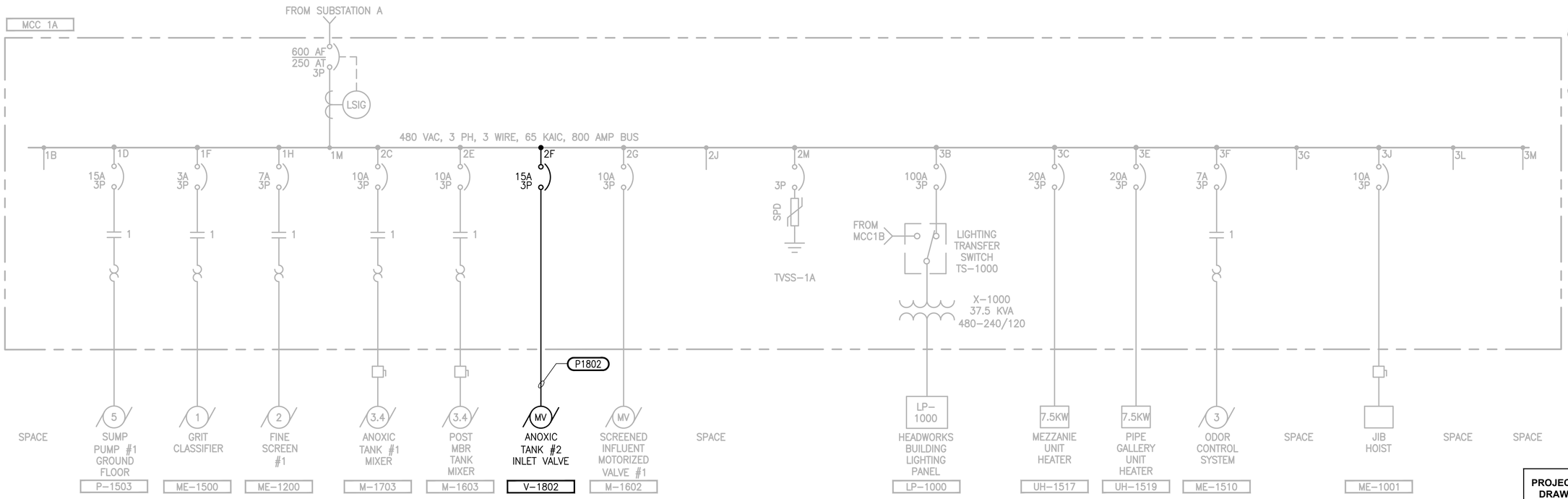

NOTE:

1. SIZE CIRCUIT BREAKER AS REQUIRED BY THE FINE SCREEN MANUFACTURER.
2. CONTROL STATION WITH SAFETY SWITCH. SEE SHEET E104 FOR DETAILS.
3. SEE SHEET E7 AND E8 FOR CIRCUIT SCHEDULE.

PROJECT WORK SHOWN ON THIS DRAWING IS ALL INCLUDED IN SCHEDULE A

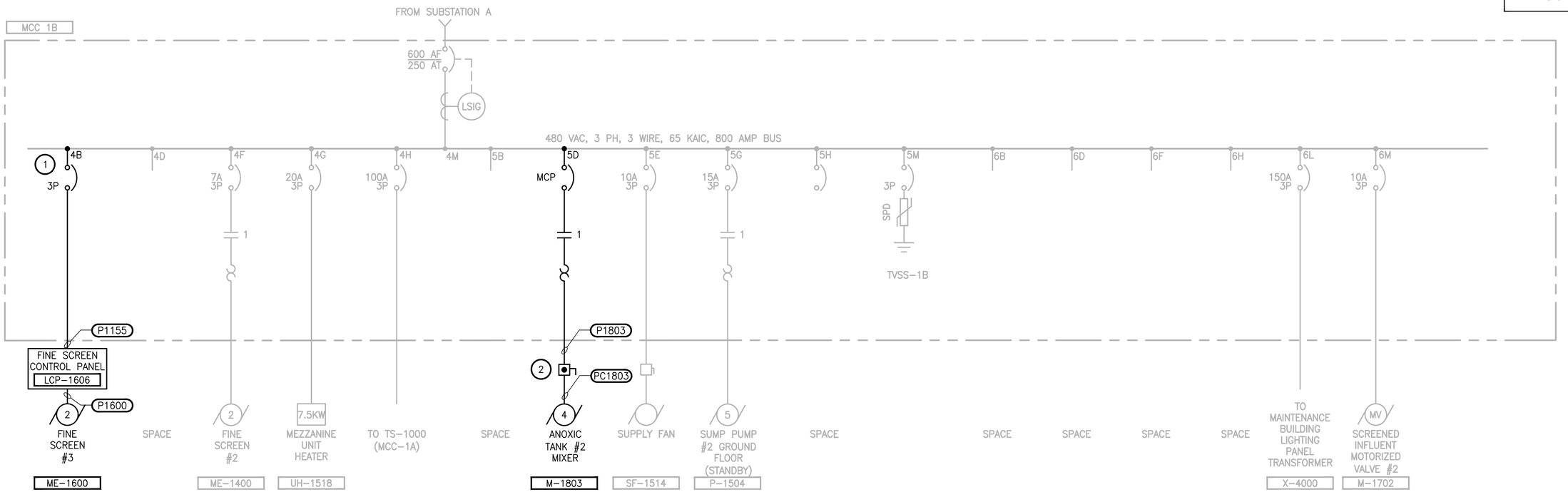

	REVISIONS	DATE	BY

DESIGNED B. WILLIAMS
DRAWN D. PETERSON
CHECKED R. ROHLER
APPROVED B. BUNKER

ONE INCH AT FULL SCALE. IF NOT, SCALE ACCORDINGLY

FILE NAME PS1598102–E101
JOB No. 216–1598–102
DATE FEBRUARY 2018

ARTHUR G. STOLEN — STATE OF WASHINGTON — 34736 — REGISTERED PROFESSIONAL ENGINEER

FEBRUARY 23, 2018

Parametrix
ENGINEERING . PLANNING . ENVIRONMENTAL SCIENCES
1019 39TH AVENUE SE, SUITE 100 | PUYALLUP, WA 98374
P 253.604.6600
WWW.PARAMETRIX.COM

PROJECT NAME
THE CONSOLIDATED BOROUGH OF QUIL CEDA VILLAGE
MBR TREATMENT FACILITY UPGRADE
TULALIP, WASHINGTON

HEADWORKS BUILDING MCC 1A & 1B ONE-LINE DIAGRAM

DRAWING NO. 59 OF 157

E101

PATH: U:\PSO\Projects\Clients\1598–TulalipTribes\216–1598–102 MBR Upgrade\99Svcs\CADD\DWG
PLOTTED BY: peterden DATE: Friday, February 23, 2018 12:30:06 PM
LAYOUT: E101

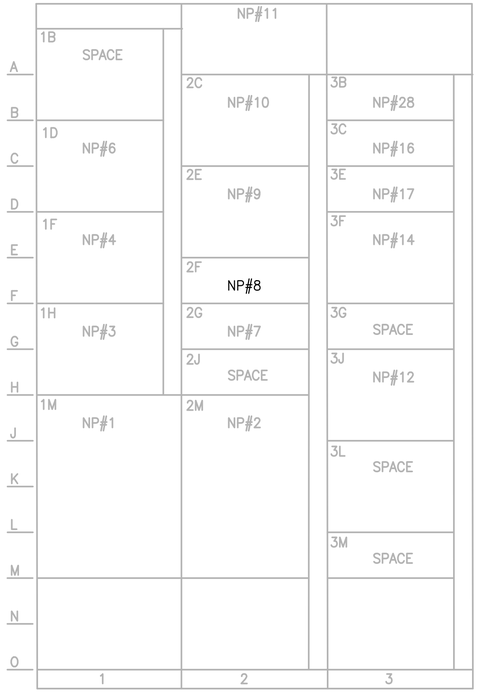

MCC 1A
ELEVATION
NTS

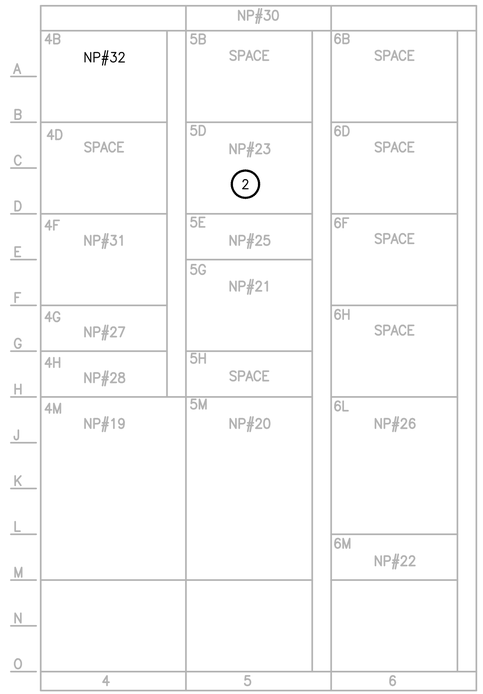

MCC 1B
ELEVATION
NTS

NAMEPLATE SCHEDULE

BUCKET	NP#	HEIGHT	WIDTH	LETTERS	FIRST LINE	SECOND LINE	THIRD LINE
1M	1	2"	4"	1/8"	MCC 1A DISCONNECT		FED FROM SUBSTATION A
2M	2	2"	4"	1/8"	TVSS		
1H	3	2"	4"	1/8"	FINE SCREEN #1	ME-1200	
1F	4	2"	4"	1/8"	GRIT CLASSIFIER	ME-1500	
1D	6	2"	4"	1/8"	SUMP PUMP #1	GROUND FLOOR	P-1503
2G	7	2"	4"	1/8"	SCREENED INFLUENT	MOTORIZED VALVE #1	M-1602
2F	**8**	**2"**	**4"**	**1/8"**	**ANOXIC TANK #2**	**INLET VALVE**	**V-1802**
2E	9	2"	4"	1/8"	POST-MEMBRANE	TANK MIXER	M-1603
2C	10	2"	4"	1/8"	ANOXIC TANK #1	TANK MIXER	M-1703
2A	11	2"	4"	1/8"	HEADWORK'S BUILDING	MCC-1A	E-1000A
3J	12	2"	4"	1/8"	JIB HOIST	ME-1001	
3F	14	2"	4"	1/8"	ODOR CONTROL SYSTEM	ME-1510	
3B	15	2"	4"	1/8"	HEADWORKS BUILDING	LIGHTING PANEL LP-1000	TS-1000 SOURCE A
3C	16	2"	4"	1/8"	MEZZANINE	UNIT HEATER	UH-1517
3E	17	2"	4"	1/8"	PIPE GALLERY	UNIT HEATER	UH-1519
	18						
4M	19	2"	4"	1/8"	MCC 1B DISCONNECT		FED FROM SUBSTATION A
5M	20	2"	4"	1/8"	TVSS		
5G	21	2"	4"	1/8"	SUMP PUMP #2	HEADWORKS GROUND FLOOR	P-1504
6M	22	2"	4"	1/8"	SCREENED INFLUENT	MOTORIZED VALVE #2	M-1702
5D	23	2"	4"	1/8"	ANOXIC TANK #2	MIXER	M-1803
5E	25	2"	4"	1/8"	PIPE GALLERY	SUPPLY FAN	SF-1514
6L	26	2"	4"	1/8"	MAINTENANCE BUILDING	LIGHTING PANEL TRANSFORMER	X-4000
4G	27	2"	4"	1/8"	MEZZANINE	UNIT HEATER	UH-1518
4H	28	2"	4"	1/8"	HEADWORK'S BUILDING	LIGHTING PANEL LP-1000	TS-1000 SOURCE B
5A	30	2"	4"	1/8"	HEADWORK'S BUILDING	MCC-1B	E-1000B
4F	31	2"	4"	1/4"	FINE	SCREENER	#2
4B	**32**	**2"**	**4"**	**1/8"**	**FINE SCREEN #3**	**ME-1600**	
	33						

NAME: **MOTOR CONTROL CENTER 1A** v 1.1

VOLTAGE: 480
PHASE: 3
WIRE: 3
HERTZ: 60

NEUTRAL BUS: NO
GROUND BUS: YES
MAIN BREAKER SIZE: 250 AMPS
MINIMUM BUS SIZE: 800 AMPS
FAULT CURRENT BRACING: 65,000 AMPS, RMS SYMMETRICAL

LOCATION: HEADWORKS BUILDING
FED FROM: SUBSTATION A
FEED (OCPD SIZE):
ENCLOSURE TYPE:
SPECIFICATION:

ASSET NUMBER	EQUIPMENT NAME OR LOAD DESCRIPTION	CONNECTED LOAD							LOAD TYPE	LTG	RCPT	MOTOR	HVAC	MISC	LARGEST MOTOR
		LOAD SIZE	LOAD UNIT	VOLT	PH	HP	AMPS	KVA							
P-1503	SUMP PUMP #1	5	HP	480	3	5.0	7.6	6.3	LM	0.0	0.0	0.0	0.0	0.0	6.3
ME-1500	GRIT CLASSIFIER	1	HP	480	3	1.0	2.1	1.7	M	0.0	0.0	1.7	0.0	0.0	0.0
ME-1200	FINE SCREEN #1	2	HP	480	3	2.0	3.4	2.8	M	0.0	0.0	2.8	0.0	0.0	0.0
M-1703	ANOXIC TANK #1 MIXER	4	HP	480	3	4.0	6.2	5.2	M	0.0	0.0	5.2	0.0	0.0	0.0
M-1603	POST MBR TANK MIXER	3	HP	480	3	3.0	4.8	4.0	M	0.0	0.0	4.0	0.0	0.0	0.0
V-1802	**ANOXIC TANK #2 INLET VALVE**	**1**	**HP**	**480**	**3**	**1.0**	**2.1**	**1.7**	**M**	0.0	0.0	**1.7**	0.0	0.0	0.0
M-1602	SCREENED INFLUENT MOTORIZED VALVE #1	1	HP	480	3	1.0	2.1	1.7	M	0.0	0.0	1.7	0.0	0.0	0.0
UH-1517	MEZZANINE UNIT HEATER	7.5	KW	480	3	0.0	9.0	7.5	H	0.0	0.0	0.0	7.5	0.0	0.0
UH-1519	PIPE GALLERY UNIT HEATER	7.5	KW	480	3	0.0	9.0	7.5	H	0.0	0.0	0.0	7.5	0.0	0.0
ME-1510	ODOR CONTROL SYSTEM	3	HP	480	3	3.0	4.8	4.0	M	0.0	0.0	4.0	0.0	0.0	0.0
ME-1001	JIB HOIST	3	HP	480	3	3.0	4.8	4.0	M	0.0	0.0	4.0	0.0	0.0	0.0
LP-1000	HEADWORKS BUILDING LIGHTING PANEL									8.8	0.3	0.0	6.7	1.7	0.0
	Connected Totals:									8.83	0.25	**25.19**	21.68	1.65	6.32

MOTOR CONTROL CENTER 1A LOAD CALCULATION:

		CONNECTED KVA	METHOD	NEC DEMAND	CALC. KVA
TOTAL LIGHTING (L) LOAD:	L	8.83	ALL @	100%	8.83
TOTAL RECEPTACLE (R) LOAD:	R	0.25	FIRST 10KVA @	100%	0.25
			REMAINDER OVER 10KVA	50%	0.00
TOTAL MOTOR (M) LOAD:	M	**25.19**	ALL @	100%	**25.19**
	LM	6.32	125% OF LARGEST	125%	7.90
TOTAL HVAC (H) LOAD:	H	21.68	ALL @	100%	21.68
TOTAL MISCELLANEOUS (X) LOAD:	X	1.65	ALL @	100%	1.65
TOTAL KVA:		**63.92 KVA**			**65.50 KVA**
AVERAGE AMPS @ 480 volts		**76.88 AMPS**			**78.78 AMPS**

NAME: **MOTOR CONTROL CENTER 1B** v 1.1

VOLTAGE: 480
PHASE: 3
WIRE: 3
HERTZ: 60

NEUTRAL BUS: NO
GROUND BUS: YES
MAIN BREAKER SIZE: 250 AMPS
MINIMUM BUS SIZE: 800 AMPS
FAULT CURRENT BRACING: 65,000 AMPS, RMS SYMMETRICAL

LOCATION: HEADWORKS BUILDING
FED FROM: SUBSTATION A
FEED (OCPD SIZE):
ENCLOSURE TYPE:
SPECIFICATION:

ASSET NUMBER	EQUIPMENT NAME OR LOAD DESCRIPTION	CONNECTED LOAD							LOAD TYPE	LTG	RCPT	MOTOR	HVAC	MISC	LARGEST MOTOR
		LOAD SIZE	LOAD UNIT	VOLT	PH	HP	AMPS	KVA							
ME-1600	**FINE SCREEN #3**	**2**	**HP**	**480**	**3**	**2.0**	**3.4**	**2.8**	**M**	0.0	0.0	**2.8**	0.0	0.0	0.0
ME-1400	FINE SCREEN #2	3	HP	480	3	3.0	4.8	4.0	M	0.0	0.0	4.0	0.0	0.0	0.0
UH-1518	MEZZANINE UNIT HEATER	7.5	KW	480	3	0.0	9.0	7.5	H	0.0	0.0	0.0	7.5	0.0	0.0
M-1803	**ANOXIC TANK #2 MIXER**	**4**	**HP**	**480**	**3**	**4.0**	**6.2**	**5.2**	**M**	0.0	0.0	**5.2**	0.0	0.0	0.0
SF-1514	SUPPLY FAN	1	HP	480	3	1.0	2.1	1.7	H	0.0	0.0	0.0	1.7	0.0	0.0
P-1504	SUMP PUMP #2 GROUND FLOOR (SB)	5	HP	480	3	5.0	7.6	6.3	LM	0.0	0.0	0.0	0.0	0.0	6.3
M-1702	SCREENED INFLUENT MOTORIZED VALVE #2	1	HP	480	3	1.0	2.1	1.7	M	0.0	0.0	1.7	0.0	0.0	0.0
X-4000	MAINTENANCE BUILDING TRANSFORMER									0.0	0.0	0.0	0.0	0.0	0.0
	Connected Totals:									0.00	0.00	**13.72**	9.25	0.00	6.32

MOTOR CONTROL CENTER 1B LOAD CALCULATION:

		CONNECTED KVA	METHOD	NEC DEMAND	CALC. KVA
TOTAL LIGHTING (L) LOAD:	L	0.00	ALL @	100%	0.00
TOTAL RECEPTACLE (R) LOAD:	R	0.00	FIRST 10KVA @	100%	0.00
			REMAINDER OVER 10KVA	50%	0.00
TOTAL MOTOR (M) LOAD:	M	**13.72**	ALL @	100%	**13.72**
	LM	6.32	125% OF LARGEST	125%	7.90
TOTAL HVAC (H) LOAD:	H	9.25	ALL @	100%	9.25
TOTAL MISCELLANEOUS (X) LOAD:	X	0.00	ALL @	100%	0.00
TOTAL KVA:		**29.28 KVA**			**30.86 KVA**
AVERAGE AMPS @ 480 volts		**35.22 AMPS**			**37.12 AMPS**

NOTES:

1. REMOVE AND REPLACE EXISTING NAMEPLATE.
2. PROVIDE MCP AND MINICAS RELAY FOR THE ANOXIC TANK #2 MIXER.
3. MCC–1A AND MCC–1B WERE SUPPLIED BY GENERAL ELECTRIC INDUSTRIAL SYSTEMS IN 2003 VIA REQUISITION #43896022–M2.

PROJECT WORK SHOWN ON THIS DRAWING IS ALL INCLUDED IN SCHEDULE A

1

PLOTTED BY: peterden DATE: Friday, February 23, 2018 2:51:57 PM
PATH: U:\PSO\Projects\Clients\1598–TulalipTribes\216–1598–102 MBR Upgrade\99Svcs\CADD\DWG
LAYOUT: E102

	REVISIONS	DATE	BY

DESIGNED B. WILLIAMS
DRAWN D. PETERSON
CHECKED R. ROHLER
APPROVED B. BUNKER

ONE INCH AT FULL SCALE. IF NOT, SCALE ACCORDINGLY
FILE NAME PS1598102–E102
JOB No. 216–1598–102
DATE FEBRUARY 2018

ARTHUR G. STORES — STATE OF WASHINGTON — 34736 — REGISTERED PROFESSIONAL ENGINEER
FEBRUARY 23, 2018

Parametrix
ENGINEERING . PLANNING . ENVIRONMENTAL SCIENCES
1019 39TH AVENUE SE, SUITE 100 | PUYALLUP, WA 98374
P 253.604.6600
WWW.PARAMETRIX.COM

PROJECT NAME
THE CONSOLIDATED BOROUGH OF QUIL CEDA VILLAGE
MBR TREATMENT FACILITY UPGRADE
TULALIP, WASHINGTON

HEADWORKS BUILDING MCC 1A & 1B ELEVATIONS AND LOAD CALCULATIONS

DRAWING NO. 60 OF 157

E102

LAYOUT: E103 PATH: U:\PSO\Projects\Clients\1598-TulalipTribes\216-1598-102 MBR Upgrade\99Svcs\CADD\DWG PLOTTED BY: peterden DATE: Friday, February 23, 2018 2:49:10 PM

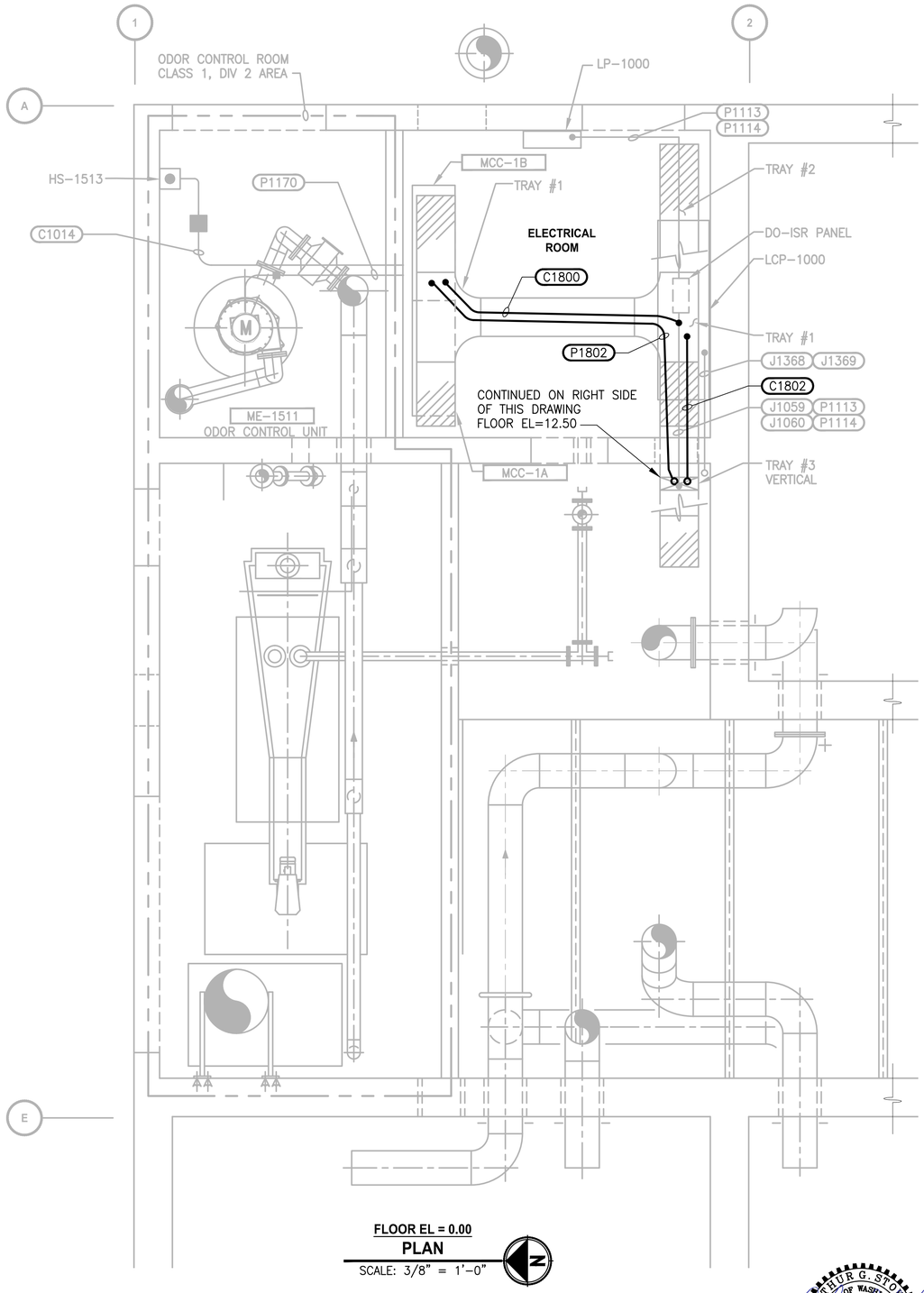

FLOOR EL = 0.00

PLAN

SCALE: 3/8" = 1'-0"

NOTES:

1. PROVIDE GRS CONDUIT DROPS FROM CABLE TRAY TO PANELS AND EQUIPMENT AS NECESSARY.
2. SEE SHEET E7 AND E8 FOR CIRCUIT SCHEDULE.
3. CIRCUITS FOR EQUIPMENT SHOWN ON SHEET E104 NOT SHOWN FOR CLARITY. SEE CIRCUIT SCHEDULE.

PROJECT WORK SHOWN ON THIS DRAWING IS ALL INCLUDED IN SCHEDULE A

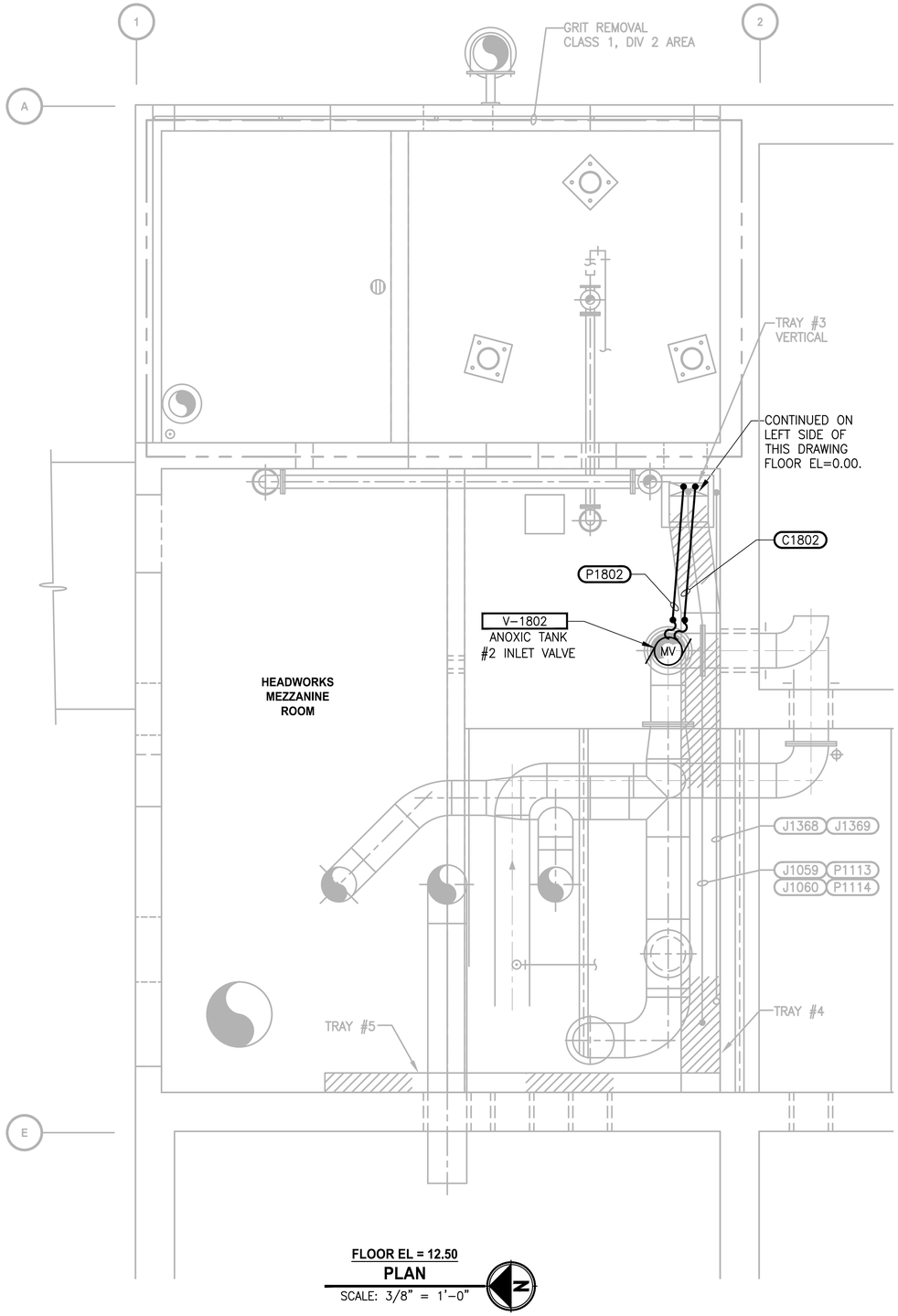

FLOOR EL = 12.50

PLAN

SCALE: 3/8" = 1'-0"

	REVISIONS	DATE	BY

DESIGNED B. WILLIAMS
DRAWN D. PETERSON
CHECKED R. ROHLER
APPROVED B. BUNKER

ONE INCH AT FULL SCALE. IF NOT, SCALE ACCORDINGLY

FILE NAME PS1598102-E103
JOB No. 216-1598-102
DATE FEBRUARY 2018

ARTHUR G. STORK — STATE OF WASHINGTON — 34736 — REGISTERED PROFESSIONAL ENGINEER

FEBRUARY 23, 2018

Parametrix
ENGINEERING . PLANNING . ENVIRONMENTAL SCIENCES
1019 39TH AVENUE SE, SUITE 100 | PUYALLUP, WA 98374
P 253.604.6600
WWW.PARAMETRIX.COM

PROJECT NAME
THE CONSOLIDATED BOROUGH OF QUIL CEDA VILLAGE
MBR TREATMENT FACILITY UPGRADE
TULALIP, WASHINGTON

HEADWORKS BUILDING CABLE TRAY PLAN EL 0.00' - 12.50'

DRAWING NO.
61 OF 157

E103

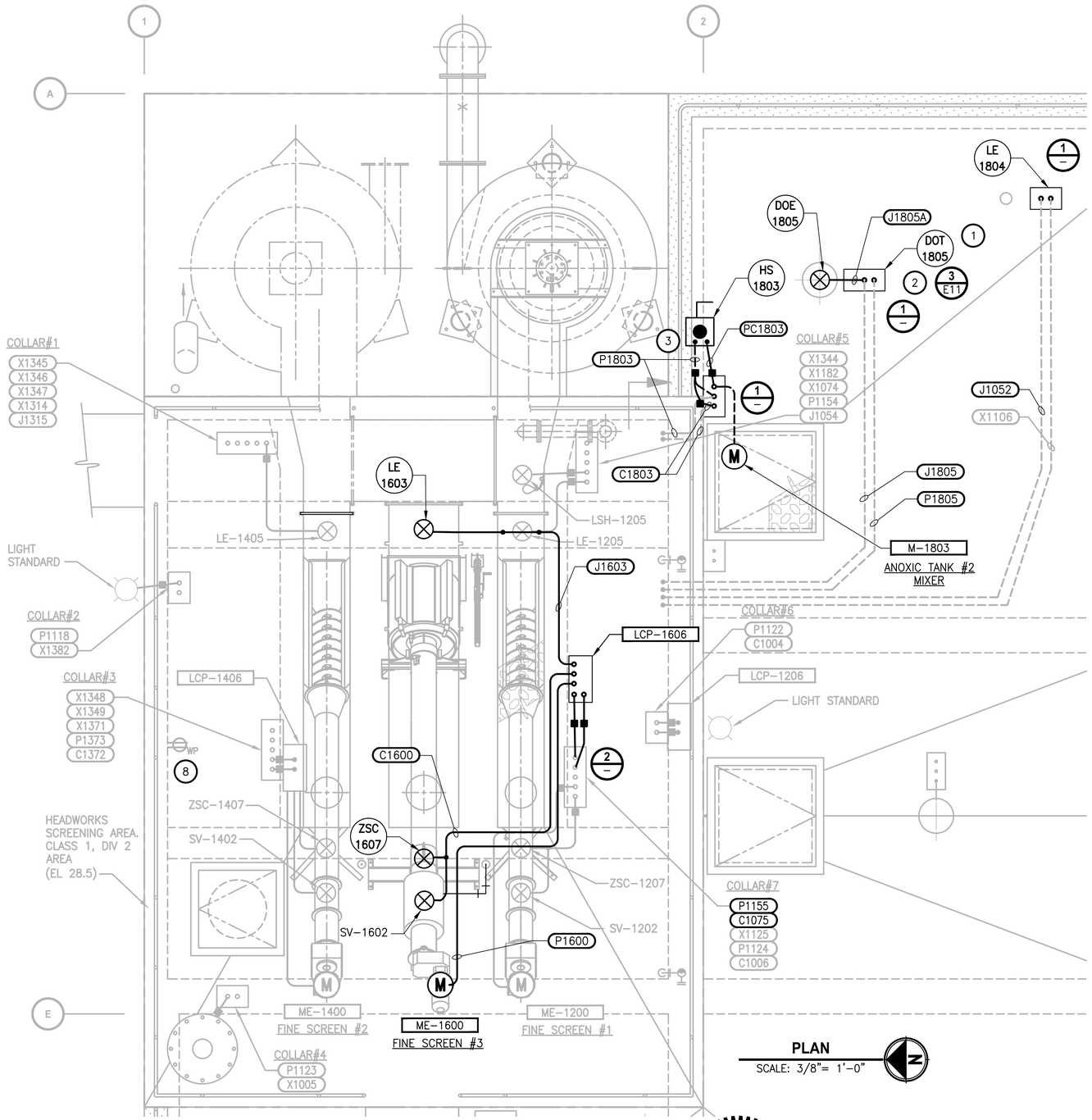

NOTES:

1. PROVIDE NEW DO ANALYZER AND ASSOCIATED SUPPORT HARDWARE AS SHOWN IN REFERENCED DETAIL. PROVIDE NEW POWER AND SIGNAL CONDUCTORS IN EXISTING CONDUIT. SEE SHEET E8 FOR CONDUIT AND CABLE SCHEDULE.
2. INSTALL CONDUIT SEAL AT EACH CONDUIT STUB–UP FROM CONCRETE ROOF CURB. EXTEND CONDUIT FROM STUB UP SEAL TO ANALYZER CONTROLLER AND INSTALL CONDUIT SEAL AT EACH CONDUIT ENTRY INTO DO ANALYZER CONTROLLER ENCLOSURE.
3. REPLACE EXISTING SUPPORT STRUCTURE AND CONTROL STATION. AT THIS LOCATION AS FOLLOWS:
   a. DEMOLISH AND REPLACE EXISTING FRAMING CHANNEL, POST BASES, BRACKETS AND OTHER STRUCTURE COMPONENTS WITH ALUMINUM 6063–T6 COMPONENTS OF SIMILAR SIZE, CONFIGURATION, AND GAUGE.
   b. NEW AND REPLACEMENT FASTENERS SHALL BE 316 SST.
   c. ALUMINUM MATERIALS IN DIRECT CONTACT WITH CONCRETE SHALL BE COATED WITH A BITUMINOUS PAINT APPROVED FOR THIS APPLICATION.
   d. DEMOLISH AND REPLACE EXISTING ANCHORS AND ASSOCIATED GROUT PAD WHERE EXISTING ANCHORS HAVE BEEN DAMAGED BY CORROSION OR OTHER FACTORS. REPLACEMENT ANCHORS SHALL BE 316 STAINLESS STEEL AND SHALL MEET THE SPECIFICATIONS ON DRAWING S1.
   e. ADJUST THE SIZE AND / OR POSITION OF THE NEW SUPPORT STRUCTURE WHERE NECESSARY.
   f. DEMOLISH AND REPLACE EXISTING DISCONNECT SWITCH AND HAND SWITCH WITH HP RATED NEMA 4X STAINLESS STEEL SAFETY SWITCH AND CONTROL STATION PER SPECIFICATIONS. PROVIDE CONTROL STATION WITH TERMINAL BLOCK TO SEPARATE THE OVERTEMP AND SEAL FAIL CONDUCTORS FROM POWER.
4. SEE SHEET E7 AND E8 FOR CIRCUIT SCHEDULE.
5. ALL EXPOSED CONDUIT SHALL BE RIGID ALUMINUM.
6. WHERE FLEXIBLE CONDUIT IS NECESSARY USE TYPE LFS WITH STAINLESS STEEL FITTINGS. KEEP LENGTH OF FLEXIBLE CONDUIT TO A MINIMUM.
7. THE HEADWORKS SCREENING AREA IS A CLASS I, DIVISION 2 HAZARDOUS LOCATION. ALL EQUIPMENT SHALL BE RATED ACCORDINGLY.
8. EXISTING RECEPTACLE SHALL BE USED FOR HEAT TRACING. CONTRACTOR TO VERIFY RECEPTACLE AND FEEDER BREAKER HAVE GROUND FAULT PROTECTION. REPLACE RECEPTACLE AND BREAKER IF NEEDED.

PROJECT WORK SHOWN ON THIS DRAWING IS ALL INCLUDED IN SCHEDULE A

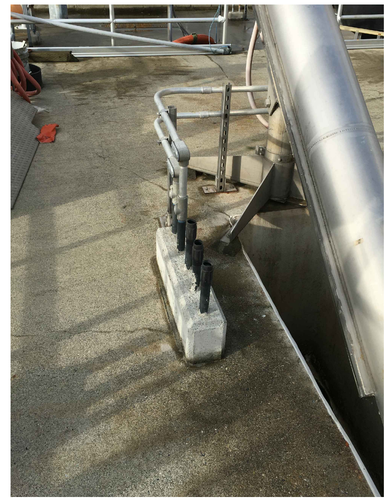

CONDUIT INSTALLATION LOCATION FOR P1155 AND C1075
DETAIL 2
NTS

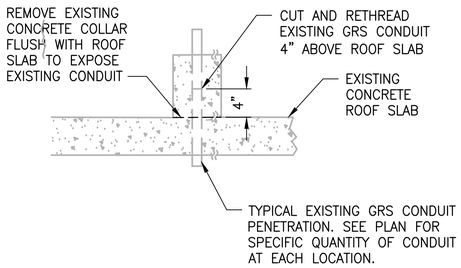

STEP 1: EXPOSE, CUT, RETHREAD EXISTING CONDUIT

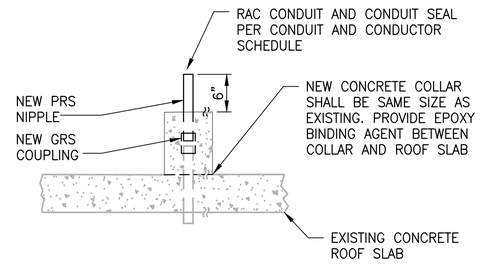

STEP 2: INSTALL NEW CONDUIT AND COLLAR

CONDUIT MODIFICATIONS AT EXISTING CONCRETE COLLARS
DETAIL 1
SCALE: 1/2"=1'-0"

	REVISIONS	DATE	BY

DESIGNED B. WILLIAMS
DRAWN D. PETERSON
CHECKED R. ROHLER
APPROVED B. BUNKER

ONE INCH AT FULL SCALE. IF NOT, SCALE ACCORDINGLY
FILE NAME PS1598102–E104
JOB No. 216–1598–102
DATE FEBRUARY 2018

ARTHUR G. STOKES — STATE OF WASHINGTON — 34736 — REGISTERED PROFESSIONAL ENGINEER
FEBRUARY 23, 2018

Parametrix
ENGINEERING . PLANNING . ENVIRONMENTAL SCIENCES
1019 39TH AVENUE SE, SUITE 100 | PUYALLUP, WA 98374
P 253.604.6600
WWW.PARAMETRIX.COM

PROJECT NAME
THE CONSOLIDATED BOROUGH OF QUIL CEDA VILLAGE
MBR TREATMENT FACILITY UPGRADE
TULALIP, WASHINGTON

HEADWORKS BUILDING CONDUIT PLAN EL 27.00' - 28.50'

DRAWING NO. 62 OF 157
E104

PATH: U:\PSO\Projects\Clients\1598–TulalipTribes\216–1598–102 MBR Upgrade\99Sheets\CADD\DWG PLOTTED BY: peterden DATE: Friday, February 23, 2018 4:27:39 PM
LAYOUT: E104

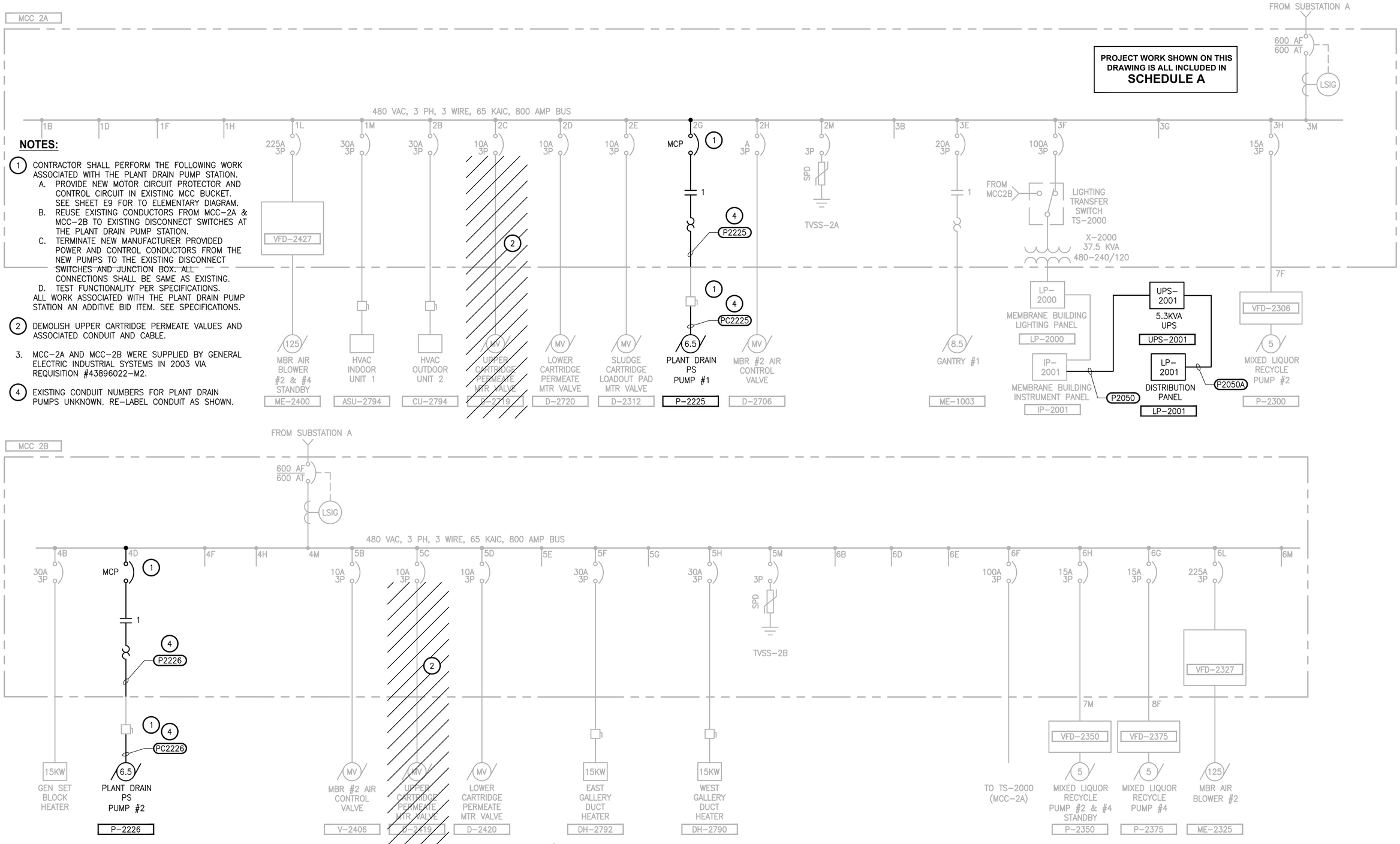

PATH: U:\PSO\Projects\Clients\1598–TulalipTribes\216–1598–102 MBR Upgrade\99Svcs\CADD\DWG
PLOTTED BY: peterden DATE: Monday, February 26, 2018 7:44:30 AM
LAYOUT: E201

	REVISIONS	DATE	BY

DESIGNED B. WILLIAMS
DRAWN D. PETERSON
CHECKED R. ROHLER
APPROVED B. BUNKER

ONE INCH AT FULL SCALE. IF NOT, SCALE ACCORDINGLY
FILE NAME PS1598102–E201
JOB No. 216–1598–102
DATE FEBRUARY 2018

ARTHUR G. STOKES
STATE OF WASHINGTON
34736
REGISTERED
PROFESSIONAL ENGINEER
FEBRUARY 23, 2018

Parametrix
ENGINEERING . PLANNING . ENVIRONMENTAL SCIENCES
1019 39TH AVENUE SE, SUITE 100 | PUYALLUP, WA 98374
P 253.604.6600
WWW.PARAMETRIX.COM

PROJECT NAME
THE CONSOLIDATED BOROUGH OF QUIL CEDA VILLAGE
MBR TREATMENT FACILITY UPGRADE
TULALIP, WASHINGTON

MBR BUILDING MCC 2A & 2B ONE-LINE DIAGRAM

DRAWING NO. 63 OF 157

E201

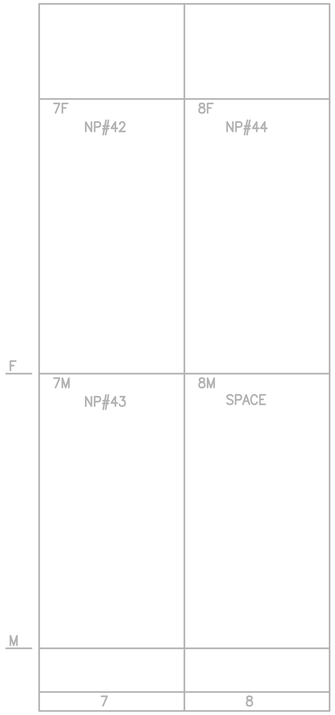

MCC 2A & 2B VFD'S
ELEVATION
NTS

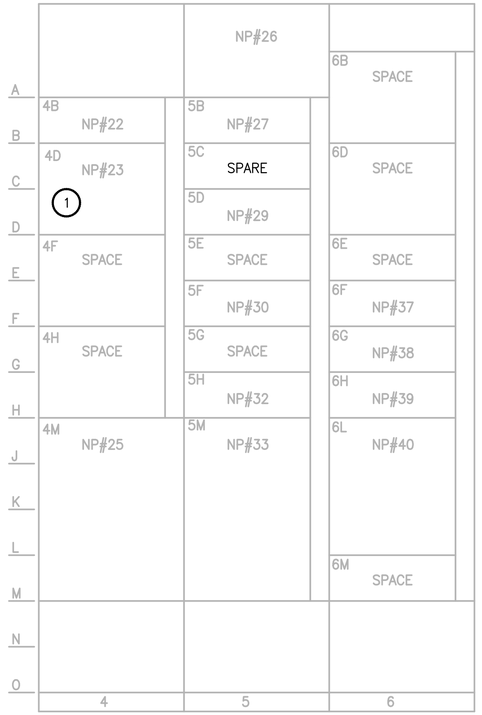

MCC 2B
ELEVATION
NTS

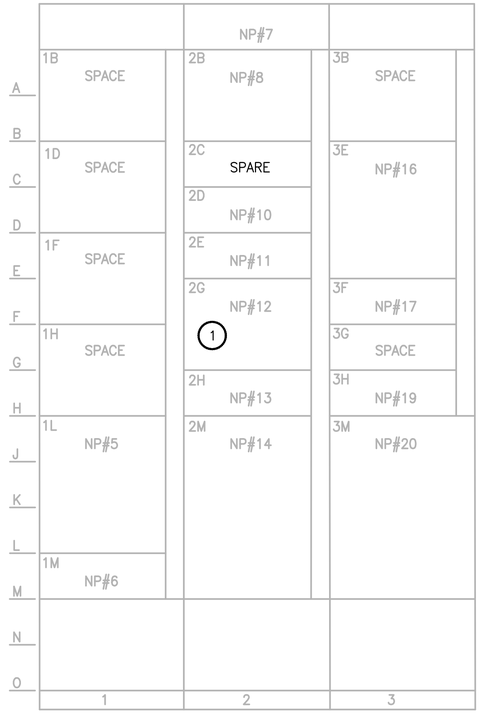

MCC 2A
ELEVATION
NTS

PROJECT WORK SHOWN ON THIS DRAWING IS ALL INCLUDED IN SCHEDULE A

NOTES:

1. PROVIDE NEW MOTOR CIRCUIT PROTECTOR AND MINICAS RELAY IN EXISTING MCC BUCKET.
2. REMOVE EXISTING NAMEPLATES.
3. MCC–2A AND MCC–2B WERE SUPPLIED BY GENERAL ELECTRIC INDUSTRIAL SYSTEMS IN 2003 VIA REQUISITION #43896022–M2.

NAMEPLATE SCHEDULE

NP#	HEIGHT	WIDTH	LETTERS	FIRST LINE	SECOND LINE	THIRD LINE	
5	2"	4"	1/8"	MEMBRANE	BIOREACTOR #2 & 4	AIR BLOWER #4 FEEDER TO VFD-2427	
6	2"	4"	1/8"	ELECTRICAL ROOM	SPLIT-SYSTEM HVAC	INDOOR UNIT ASU-2794	
7	2"	4"	1/8"	MEMBRANE BUILDING	MCC-2A		
8	2"	4"	1/8"	ELECTRICAL ROOM	SPLIT-SYSTEM HVAC	OUTDOOR UNIT CU-2794	
9	2"	4"	1/8"	~~UPPER CARTRIDGE~~	~~PERMEATE MOTORIZED~~	~~VALVE D-2419~~	2
10	2"	4"	1/8"	LOWER CARTRIDGE	PERMEATE MOTORIZED	VALVE D-2720	
11	2"	4"	1/8"	SLUDGE CARTRIDGE	LOADOUT PAD	MOTORIZED VALVE V-2312	
12	2"	4"	1/8"	PLANT DRAIN	PUMP STATION	SUMP PUMP #1 P-2225	
13	2"	4"	1/8"	MEMBRANE BIOREACTOR	AIR CONTROL VALVE	D-2706	
14	2"	4"	1/8"	TVSS UNIT			
16	2"	4"	1/8"	GANTRY CRANE #1		ME-1003	
17	2"	4"	1/8"	MEMBRANE BUILDING	LIGHTING PANEL LP-2000 & IP-2001	TS-2000 SOURCE A	
19	2"	4"	1/8"	MIXED LIQUOR	RECYCLE PUMP #2	FEEDER TO VFD-2306	
20	2"	4"	1/8"	MCC-2A	MAIN DISCONNECT	FED FROM SUBSTATION A	
22	2"	4"	1/8"	TO ATS	GEN SET	BLOCK HEATER	
23	2"	4"	1/8"	PLANT DRAIN	PUMP STATION	SUMP PUMP #2 P-2226	
25	2"	4"	1/8"	MCC-2B	MAIN DISCONNECT	FED FROM SUBSTATION A	
26	2"	4"	1/8"	MEMBRANE BUILDING	MCC-2B		
27	2"	4"	1/8"	MEMBRANE BIOREACTOR #2	AIR CONTROL VALVE	V-2406	
28	2"	4"	1/8"	~~UPPER CARTRIDGE~~	~~PERMEATE MOTORIZED~~	~~VALVE D-2419~~	2
29	2"	4"	1/8"	LOWER CARTRIDGE	PERMEATE MOTORIZED	VALVE D-2420	
30	2"	4"	1/8"	EAST GALLERY	DUCT HEATER	DH-2792	
32	2"	4"	1/8"	WEST GALLERY	DUCT HEATER	DH-2790	
33	2"	4"	1/8"	TVSS UNIT			
37	2"	4"	1/8"	MEMBRANE BUILDING	LIGHTING PANEL LP-2000 & IP-2001	TS-2000 SOURCE B	
38	2"	4"	1/8"	MIXED LIQUOR	RECYCLE PUMP #4	FEEDER TO VFD-2375	
39	2"	4"	1/8"	MIXED LIQUOR	RECYCLE PUMP #2 & 4	FEEDER AIR BACKUP P-2350	
40	2"	4"	1/8"	MEMBRANE	BIOREACTOR #2 & 4	FEEDER AIR BLOWER #2 VFD-2327	
42	2"	4"	1/8"	MIXED LIQUOR	RECYCLE PUMP #4	VFD-2375	
43	2"	4"	1/8"	MIXED LIQUOR	RECYCLE PUMP #2 & #4 STANDBY	VFD-2350	
44	2"	4"	1/8"	MIXED LIQUOR	RECYCLE PUMP #2	VFD-2300	

NAME: MOTOR CONTROL CENTER 2A — v 1.1

VOLTAGE: 480 — PHASE: 3 — WIRE: 3 — HERTZ: 60
NEUTRAL BUS: NO — GROUND BUS: YES — MAIN BREAKER SIZE: 600 AMPS — MINIMUM BUS SIZE: 800 AMPS — FAULT CURRENT BRACING: 65,000 AMPS, RMS SYMMETRICAL
LOCATION: MBR BUILDING — FED FROM: SUBSTATION A — FEED (OCPD SIZE): — ENCLOSURE TYPE: — SPECIFICATION:

ASSET NUMBER	EQUIPMENT NAME OR LOAD DESCRIPTION	CONNECTED LOAD							LOAD TYPE	LTG	RCPT	MOTOR	HVAC	MISC	LARGEST MOTOR
		LOAD SIZE	LOAD UNIT	VOLT	PH	HP	AMPS	KVA							
P-2225	PLANT DRAIN PS PUMP #1	**6.5**	**HP**	**480**	**3**	**6.5**	**9.7**	**8.1**	**M**	**0.0**	**0.0**	**8.1**	**0.0**	**0.0**	**0.0**
P-2300	MIXED LIQUOR RECYCLE PUMP #2	5	HP	480	3	5.0	7.6	6.3	M	0.0	0.0	6.3	0.0	0.0	0.0
ME-2400	BIOREACTOR AIR BLOWER #4 SB	125	HP	480	3	125.0	156.0	129.7	LM	0.0	0.0	0.0	0.0	0.0	129.7
ME-1003	GANTRY #1	10	HP	480	3	10.0	14.0	11.6	M	0.0	0.0	11.6	0.0	0.0	0.0
D-2719	UPPER CARTRIDGE PERM MV	1	HP	480	3	1.0	2.1	1.7	M	0.0	0.0	1.7	0.0	0.0	0.0
CU-2794	HVAC UNIT-2	7.5	KW	480	3	0.0	9.0	7.5	H	0.0	0.0	0.0	7.5	0.0	0.0
ASU-2794	HVAC UNIT-1	7.5	KW	480	3	0.0	9.0	7.5	H	0.0	0.0	0.0	7.5	0.0	0.0
D-2720	LOWER CARTRIDGE PERM MV	1	HP	480	3	1.0	2.1	1.7	M	0.0	0.0	1.7	0.0	0.0	0.0
V-2706	MBR #2 AIR CONTROL VALVE	1	HP	480	3	1.0	2.1	1.7	M	0.0	0.0	1.7	0.0	0.0	0.0
D-2312	SLUDGE LOADOUT MV	1	HP	480	3	1.0	2.1	1.7	M	0.0	0.0	1.7	0.0	0.0	0.0
LP-2000	MEMBRANE BUILDING LIGHTING PANEL									15.1	2.7	0.0	2.9	11.7	0.0
	Connected Totals:									15.08	2.71	**33.01**	17.94	11.68	129.70

MOTOR CONTROL CENTER 2A LOAD CALCULATION:

		CONNECTED KVA	METHOD	NEC DEMAND	CALC. KVA
TOTAL LIGHTING (L) LOAD:	L	15.08	ALL @	100%	15.08
TOTAL RECEPTACLE (R) LOAD:	R	2.71	FIRST 10KVA @	100%	2.71
			REMAINDER OVER 10KVA	50%	0.00
TOTAL MOTOR (M) LOAD:	M	**33.01**	ALL @	100%	**33.01**
	LM	129.70	125% OF LARGEST	125%	162.12
TOTAL HVAC (H) LOAD:	H	17.94	ALL @	100%	17.94
TOTAL MISCELLANEOUS (X) LOAD:	X	11.68	ALL @	100%	11.68
TOTAL KVA:		**210.11 KVA**			**242.53 KVA**
AVERAGE AMPS @ 480 volts		**252.72 AMPS**			**291.72 AMPS**

NAME: **MOTOR CONTROL CENTER 2B** — v 1.1

VOLTAGE: 480 — PHASE: 3 — WIRE: 3 — HERTZ: 60
NEUTRAL BUS: NO — GROUND BUS: YES — MAIN BREAKER SIZE: 600 AMPS — MINIMUM BUS SIZE: 800 AMPS — FAULT CURRENT BRACING: 65,000 AMPS, RMS SYMMETRICAL
LOCATION: MBR BUILDING — FED FROM: SUBSTATION A — FEED (OCPD SIZE): — ENCLOSURE TYPE: — SPECIFICATION:

ASSET NUMBER	EQUIPMENT NAME OR LOAD DESCRIPTION	CONNECTED LOAD							LOAD TYPE	LTG	RCPT	MOTOR	HVAC	MISC	LARGEST MOTOR
		LOAD SIZE	LOAD UNIT	VOLT	PH	HP	AMPS	KVA							
GEN-HTR	GEN SET BLOCK HEATER	15	KW	480	3	0.0	18.0	15.0	X	0.0	0.0	0.0	0.0	15.0	0.0
P-2226	PLANT DRAIN PS PUMP #2	**6.5**	**HP**	**480**	**3**	**6.5**	**9.7**	**8.1**	**M**	**0.0**	**0.0**	**8.1**	**0.0**	**0.0**	**0.0**
P-2375	MIXED LIQUOR RECYCLE PUMP #4	5	HP	480	3	5.0	7.6	6.3	M	0.0	0.0	6.3	0.0	0.0	0.0
P-2350	MIXED LIQUOR RECYCLE PUMP #2 & #4 SB	5	HP	480	3	5.0	7.6	6.3	M	0.0	0.0	6.3	0.0	0.0	0.0
DH-2792	EAST GALLERY DUCT HEATER	15	KW	480	3	0.0	18.0	15.0	H	0.0	0.0	0.0	15.0	0.0	0.0
DH-2790	WEST GALLERY DUCT HEATER	15	KW	480	3	0.0	18.0	15.0	H	0.0	0.0	0.0	15.0	0.0	0.0
ME-2325	BIOREACTOR AIR BLOWER #2	125	HP	480	3	125.0	156.0	129.7	LM	0.0	0.0	0.0	0.0	0.0	129.7
D-2419	UPPER CARTRIDGE PERMEATE MV	1	HP	480	3	1.0	2.1	1.7	M	0.0	0.0	1.7	0.0	0.0	0.0
D-2420	LOWER CARTRIDGE PERMEATE MV	1	HP	480	3	1.0	2.1	1.7	M	0.0	0.0	1.7	0.0	0.0	0.0
V-2406	MBR #2 AIR CONTROL VALVE	1	HP	480	3	1.0	2.1	1.7	M	0.0	0.0	1.7	0.0	0.0	0.0
	Connected Totals:									0.00	0.00	**25.94**	30.00	15.00	129.70

MOTOR CONTROL CENTER 2B LOAD CALCULATION:

		CONNECTED KVA	METHOD	NEC DEMAND	CALC. KVA
TOTAL LIGHTING (L) LOAD:	L	0.00	ALL @	100%	0.00
TOTAL RECEPTACLE (R) LOAD:	R	0.00	FIRST 10KVA @	100%	0.00
			REMAINDER OVER 10KVA	50%	0.00
TOTAL MOTOR (M) LOAD:	M	**25.94**	ALL @	100%	**25.94**
	LM	129.70	125% OF LARGEST	125%	162.12
TOTAL HVAC (H) LOAD:	H	30.00	ALL @	100%	30.00
TOTAL MISCELLANEOUS (X) LOAD:	X	15.00	ALL @	100%	15.00
TOTAL KVA:		**200.64 KVA**			**233.06 KVA**
AVERAGE AMPS @ 480 volts		**241.33 AMPS**			**280.33 AMPS**

PATH: U:\PSO\Projects\Clients\1598-TulalipTribes\216-1598-102 MBR Upgrade\99Svcs\CADD\DWG
PLOTTED BY: peterden DATE: Friday, February 23, 2018 4:28:52 PM
LAYOUT: E202

	REVISIONS	DATE	BY

DESIGNED B. WILLIAMS
DRAWN D. PETERSON
CHECKED R. ROHLER
APPROVED B. BUNKER

ONE INCH AT FULL SCALE. IF NOT, SCALE ACCORDINGLY
FILE NAME PS1598102-E202
JOB No. 216-1598-102
DATE FEBRUARY 2018

ARTHUR G. STORK — STATE OF WASHINGTON — 34736 — REGISTERED PROFESSIONAL ENGINEER

FEBRUARY 23, 2018

Parametrix
ENGINEERING . PLANNING . ENVIRONMENTAL SCIENCES
1019 39TH AVENUE SE, SUITE 100 | PUYALLUP, WA 98374
P 253.604.6600
WWW.PARAMETRIX.COM

PROJECT NAME
THE CONSOLIDATED BOROUGH OF QUIL CEDA VILLAGE
MBR TREATMENT FACILITY UPGRADE
TULALIP, WASHINGTON

MBR BUILDING MCC 2A & 2B ELEVATIONS

DRAWING NO. 64 OF 157

E202

v 1.0

PANELBOARD SCHEDULE

NAME: IP-2001

VOLTAGE RATING: **120/240 VOLTS, 1 PHASE, 3 WIRE**
BUS RATING: **225** AMPS
LUGS: **225** AMPS
FEED: **BOTTOM**
MOUNTING: **SURFACE**
SPECIAL FEATURES: **10,000 AIC BRACING**

LOCATION: **MEMBRANE ELECTRICAL ROOM**
FED FROM: **MCC-2A VIA X-2000/LP-2000**
NOTES:

LOAD TYPE	CIRCUIT DESCRIPTION	VA	CKT	BRKR	L1	L2	BRKR	CKT	VA	CIRCUIT DESCRIPTION	LOAD TYPE
X	FIT-2111	300	1	15 / 1	-A-		15 / 1	2	300	FIT-2304	X
X	**FIT-2311**	**300**	3	15 / 1		-B-	15 / 1	4	300	FIT-2312	X
X	FIT-2417	300	5	15 / 1	-A-		15 / 1	6	300	FIT-2418	X
X	**FIT-2104**	**300**	7	15 / 1		-B-	15 / 1	8	300	FUEL TANK	X
X	**FIT-2133**	**300**	9	15 / 1	-A-		15 / 1	10	**300**	**FIT-2517**	**X**
X	**FIT-2433**	**300**	11	15 / 1		-B-	15 / 1	12	**300**	**FIT-2617**	**X**
X	FIT-2333	300	13	15 / 1	-A-		15 / 1	14		SPARE	
X	FIT-2311	300	15	15 / 1		-B-	15 / 1	16	300	FIT-2233	X
	SPARE		17	15 / 1	-A-		15 / 1	18		SPARE	
X	DOT-2707	300	19	15 / 1		-B-	15 / 1	20	250	**LCP-2023 INSTRUMENT RCPT.**	R
X	DOT-2407	300	21	15 / 1	-A-		15 / 1	22		**SPARE**	
	SPARE		23	15 / 1		-B-	15 / 1	24		SPARE	
X	**XIT-2504/XIT-2505**	**600**	25	20 / 1	-A-		20 / 1	26		SPARE	
X	**XIT-2604/XIT-2605**	**600**	27	20 / 1		-B-	20 / 1	28	500	FIRE ALARM PANEL	X
X	XE-2404	300	29	15 / 1	-A-		15 / 1	30	300	XE-2704	X
X	XE-2405	300	31	15 / 1		-B-	15 / 1	32	300	XE-2705	X
	SPARE		33	15 / 1	-A-		15 / 1	34		SPARE	
	SPARE		35	20 / 1		-B-	20 / 1	36		SPARE	
	SPARE		37	20 / 1	-A-		20 / 1	38		SPARE	
X	**SUB FEED UPS-2001**	**2,760**	39	**30 / 2**		-B-	20 / 1	40		SPARE	
X		**2,760**	41		-A-		20 / 1	42		SPARE	
	LINE LOADS:	**6,360 VA(L1)**							**7,410 VA(L2)**		
	TOTAL LOAD:	**13.77 KVA**					**57.4 AMPS**				

IP-2001 LOAD CALCULATION:

		CONNECTED VA	METHOD	NEC DEMAND	CALC. VA
TOTAL LIGHTING (L) LOAD:	L	0	ALL @	100%	0
TOTAL RECEPTACLE (R) LOAD:	R	250	FIRST 10KVA @	100%	250
			REMAINDER OVER 10KVA	50%	0
TOTAL MOTOR (M) LOAD:	M	0	ALL @	100%	0
	LM	0	125% OF LARGEST	125%	0
TOTAL HVAC (H) LOAD:	H	0	ALL @	100%	0
TOTAL MISCELLANEOUS (X) LOAD:	X	**13520**	ALL @	100%	**13520**
TOTAL VA:		**13770 VA**			**13770 VA**
AVERAGE AMPS @		**57 AMPS**			**57 AMPS**
VOLTAGE PHASE TO PHASE=	240				

v 1.0

PANELBOARD SCHEDULE

NAME: LP-2000

VOLTAGE RATING: **120/240 VOLTS, 1 PHASE, 3 WIRE**
BUS RATING: **225** AMPS
MAIN BREAKER: **225** AMPS
FEED: **BOTTOM**
MOUNTING: **SURFACE**
SPECIAL FEATURES: **10,000 AIC BRACING**

LOCATION: **MEMBRANE ELECTRICAL ROOM**
FED FROM: **MCC-2A VIA X-2000**
NOTES:

LOAD TYPE	CIRCUIT DESCRIPTION	VA	CKT	BRKR	L1	L2	BRKR	CKT	VA	CIRCUIT DESCRIPTION	LOAD TYPE
L	INDOOR LIGHTING	1,200	1	20 / 1	-A-		20 / 1	2	500	INDOOR LIGHTING	L
L	INDOOR LIGHTING	1,200	3	20 / 1		-B-	20 / 1	4	1,000	INDOOR LIGHTING	L
L	INDOOR LIGHTING	800	5	20 / 1	-A-		20 / 1	6	900	INDOOR LIGHTING	L
L	INDOOR LIGHTING	1,000	7	20 / 1		-B-	20 / 1	8	1,190	RCPT. AND E. LIGHTING EL. 11.5'	L
L	RCPT. AND E. LIGHTING EL. 11.5'	1,117	9	20 / 1	-A-		20 / 1	10	970	RCPT. AND E. LIGHTING EL. 0.0'	L
L	RCPT. AND E. LIGHTING EL. 0.0'	738	11	20 / 1		-B-	20 / 1	12	1,260	OUTDOOR LIGHTING	L
L	OUTDOOR LIGHTING	1,050	13	20 / 1	-A-		20 / 1	14	893	OUTDOOR LTG., RCPT. AND E. LTG.	L
H	BLOWER FANS	1,000	15	20 / 1		-B-	20 / 1	16	763	OUTDOOR LTG., RCPT. AND E. LTG.	L
R	CONTROL ROOM INSTRUMENT RCPT.	465	17	20 / 1	-A-		20 / 1	18	465	CONTROL ROOM INSTRUMENT RCPT.	R
R	CONTROL ROOM INSTRUMENT RCPT.	465	19	20 / 1		-B-	20 / 1	20	500	LIGHTING CONTACTOR	L
H	HEAT TRACE EL. 26.0' HOSE BIBS	233	21	20 / 1	-A-		20 / 1	22	233	HEAT TRACE EL. 26.0' HOSE BIBS	H
H	WEST GALLERY SF-2790	289	23	20 / 1		-B-	20 / 1	24	434	WEST GALLERY SF-2791	H
H	EAST GALLERY SF-2792	289	25	20 / 1	-A-		20 / 1	26	434	EAST GALLERY CEILING SF-2793	H
H	WEST GALLERY CEILING INTAKE L-2791	7	27	20 / 1		-B-	20 / 1	28	7	EAST GALLERY INTAKE L-2793	H
H	WEST GALLERY CEILING EXHAUST L-2797	7	29	20 / 1	-A-		20 / 1	30	7	EAST GALLERY EXHAUST L-2798	H
X	GENERATOR BATTERY CHARGER	350	31	20 / 1		-B-	20 / 1	32	233	SUBSTATION A RCPT.	R
	SPARE		33	20 / 1	-A-		20 / 1	34	75	SV-2113 (P-TRAP PRIMER)	X
	SPARE		35	20 / 1		-B-	20 / 1	36	233	SUBSTATION A RCPT.	R
	SPARE		37	20 / 1	-A-		20 / 1	38		SPARE	
X	SUB FEED IP-2001	**5,925**	39	70 / 2		-B-	20 / 2	40	425	230V RECEPTACLE	R
X		**5,925**	41		-A-			42	425		R
	LINE LOADS:	**15,988 VA(L1)**							**17,019 VA(L2)**		
	TOTAL LOAD:	**33.01 KVA**					**137.5 AMPS**				

LP-2000 LOAD CALCULATION:

		CONNECTED VA	METHOD	NEC DEMAND	CALC. VA
TOTAL LIGHTING (L) LOAD:	L	15081	ALL @	100%	15081
TOTAL RECEPTACLE (R) LOAD:	R	2711	FIRST 10KVA @	100%	2711
			REMAINDER OVER 10KVA	50%	0
TOTAL MOTOR (M) LOAD:	M	0	ALL @	100%	0
	LM	0	125% OF LARGEST	125%	0
TOTAL HVAC (H) LOAD:	H	2940	ALL @	100%	2940
TOTAL MISCELLANEOUS (X) LOAD:	X	**12275**	ALL @	100%	**12275**
TOTAL VA:		**33007 VA**			**33007 VA**
AVERAGE AMPS @		**138 AMPS**			**138 AMPS**
VOLTAGE PHASE TO PHASE=	240				

NOTES:

1. CONTRACTOR SHALL VERIFY THIS IS THE CIRCUIT FEEDING EXISTING CONTROL PANEL LCP–2000 (TO BE RENAMED LCP–2023) AND UPDATE THE PANELBOARD SCHEDULE AS SHOWN.

PROJECT WORK SHOWN ON THIS DRAWING IS ALL INCLUDED IN SCHEDULE A

v 1.0

PANELBOARD SCHEDULE

NAME: LP-2001

VOLTAGE RATING: **120/240 VOLTS, 1 PHASE, 3 WIRE**
BUS RATING: **100** AMPS
LUGS: **100** AMPS
FEED: **BOTTOM**
MOUNTING: **SURFACE**
SPECIAL FEATURES: **10,000 AIC BRACING**

LOCATION: **MEMBRANE ELECTRICAL ROOM**
FED FROM: **IP-2001**
NOTES:

LOAD TYPE	CIRCUIT DESCRIPTION	VA	CKT	BRKR	L1	L2	BRKR	CKT	VA	CIRCUIT DESCRIPTION	LOAD TYPE
X	LCP-2000	1,500	1	20 / 1	-A-		20 / 1	2	1,500	LCP-2014	X
X	LCP-2023	1,500	3	20 / 1		-B-	20 / 1	4	520	CONTROL ROOM POWER STRIP	R
	SPARE		5	20 / 1	-A-		20 / 1	6	500	CONTROL ROOM BUSINESS PC	X
	SPARE		7	20 / 1		-B-	20 / 1	8		SPARE	
	SPARE		9	20 / 1	-A-		20 / 1	10		SPARE	
	SPARE		11	20 / 1		-B-	20 / 1	12		SPARE	
	LINE LOADS:	**3,500 VA(L1)**							**2,020 VA(L2)**		
	TOTAL LOAD:	**5.52 KVA**					**23.0 AMPS**				

LP-2001 LOAD CALCULATION:

		CONNECTED VA	METHOD	NEC DEMAND	CALC. VA
TOTAL LIGHTING (L) LOAD:	L	0	ALL @	100%	0
TOTAL RECEPTACLE (R) LOAD:	R	520	FIRST 10KVA @	100%	520
			REMAINDER OVER 10KVA	50%	0
TOTAL MOTOR (M) LOAD:	M	0	ALL @	100%	0
	LM	0	125% OF LARGEST	125%	0
TOTAL HVAC (H) LOAD:	H	0	ALL @	100%	0
TOTAL MISCELLANEOUS (X) LOAD:	X	5000	ALL @	100%	5000
TOTAL VA:		5520 VA			5520 VA
AVERAGE AMPS @		23 AMPS			23 AMPS
VOLTAGE PHASE TO PHASE=	240				

PATH: U:\PSO\Projects\Clients\1598-TulalipTribes\216-1598-102 MBR Upgrade\95Svcs\CADD\DWG
PLOTTED BY: peterden DATE: Monday, February 26, 2018 7:46:43 AM
LAYOUT: E203

	REVISIONS	DATE	BY

DESIGNED B. WILLIAMS
DRAWN D. PETERSON
CHECKED R. ROHLER
APPROVED B. BUNKER

ONE INCH AT FULL SCALE. IF NOT, SCALE ACCORDINGLY
FILE NAME PS1598102-E203
JOB No. 216-1598-102
DATE FEBRUARY 2018

ARTHUR G. STONE — STATE OF WASHINGTON — 34736 — REGISTERED PROFESSIONAL ENGINEER

FEBRUARY 23, 2018

Parametrix
ENGINEERING . PLANNING . ENVIRONMENTAL SCIENCES
1019 39TH AVENUE SE, SUITE 100 | PUYALLUP, WA 98374
P 253.604.6600
WWW.PARAMETRIX.COM

PROJECT NAME
THE CONSOLIDATED BOROUGH OF QUIL CEDA VILLAGE
MBR TREATMENT FACILITY UPGRADE
TULALIP, WASHINGTON

MBR BUILDING MCC 2A & 2B LOAD CALCULATIONS & PANEL SCHEDULES

DRAWING NO. 65 OF 157

E203

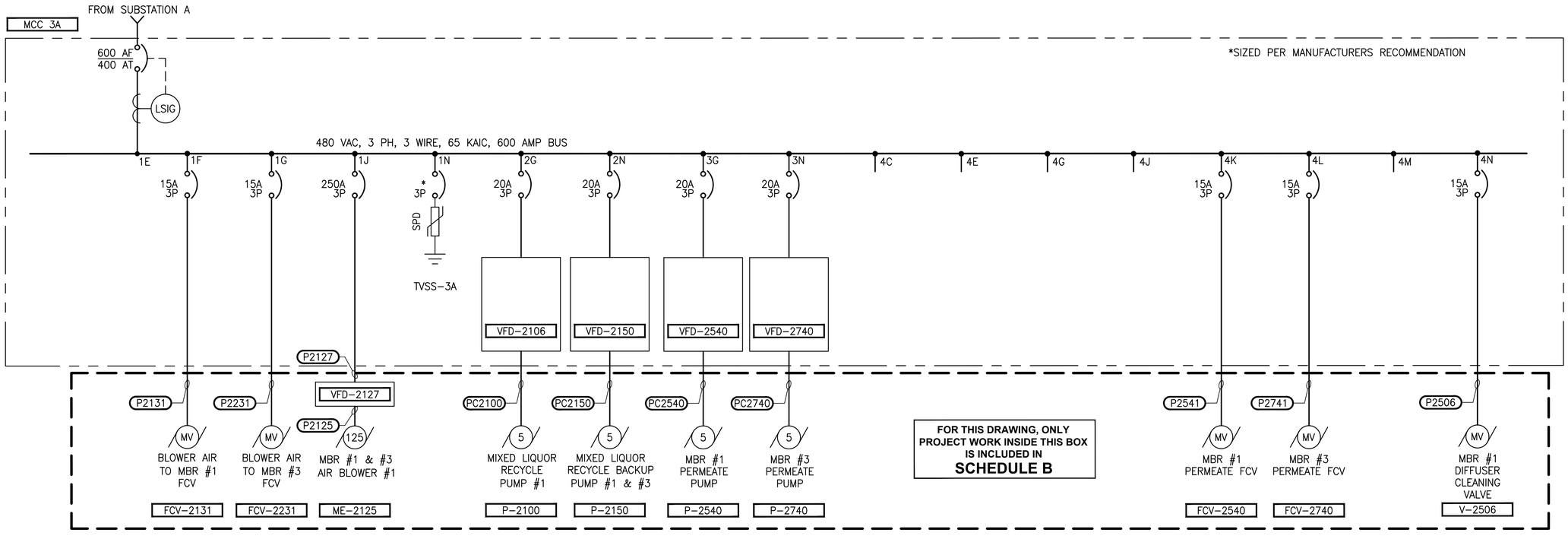

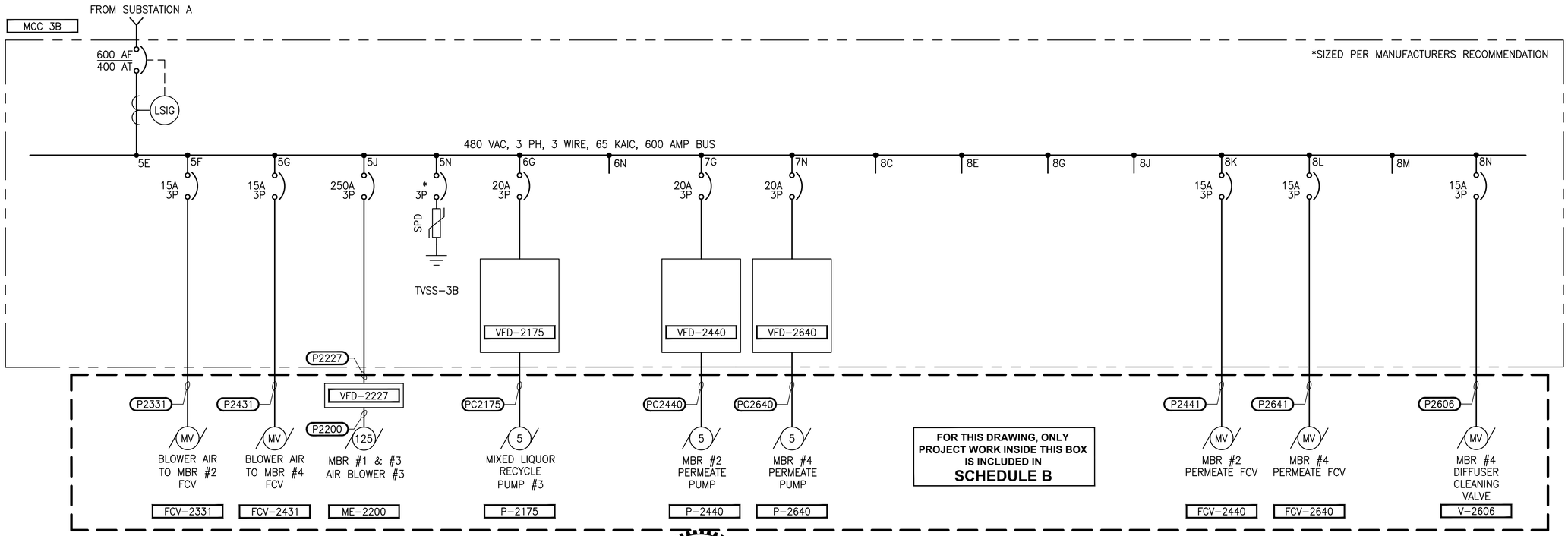

NOTES:

1. SEE SHEET E7 AND E8 FOR CIRCUIT SCHEDULE.

ALL PROJECT WORK OUTSIDE THE BOXES NOTED FOR SCHEDULE B, SHALL BE
SCHEDULE A

REVISIONS	DATE	BY

DESIGNED B. WILLIAMS
DRAWN D. PETERSON
CHECKED R. ROHLER
APPROVED B. BUNKER

ONE INCH AT FULL SCALE. IF NOT, SCALE ACCORDINGLY

FILE NAME PS1598102-E204
JOB No. 216-1598-102
DATE FEBRUARY 2018

ARTHUR G. STORES — STATE OF WASHINGTON — 34736 — REGISTERED PROFESSIONAL ENGINEER

FEBRUARY 23, 2018

Parametrix
ENGINEERING . PLANNING . ENVIRONMENTAL SCIENCES
1019 39TH AVENUE SE, SUITE 100 | PUYALLUP, WA 98374
P 253.604.6600
WWW.PARAMETRIX.COM

PROJECT NAME
THE CONSOLIDATED BOROUGH OF QUIL CEDA VILLAGE
MBR TREATMENT FACILITY UPGRADE
TULALIP, WASHINGTON

MBR BUILDING MCC 3A & 3B ONE-LINE DIAGRAM

DRAWING NO. 66 OF 157

E204

PATH: U:\PSO\Projects\Client\1598-TulalipTribes\216-1598-102 MBR Upgrade\99Svcs\CADD\DWG PLOTTED BY: peterden DATE: Friday, February 23, 2018 4:23:12 PM
LAYOUT: E204

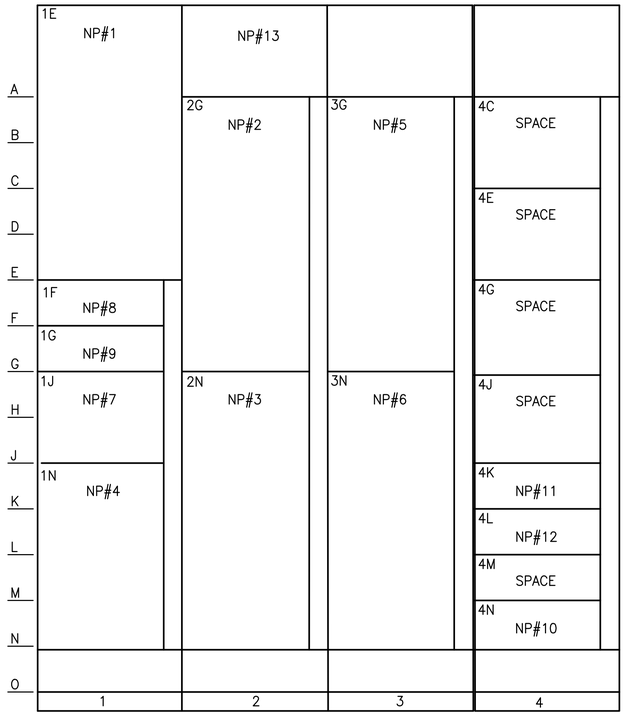

MCC 3A
ELEVATION
NTS

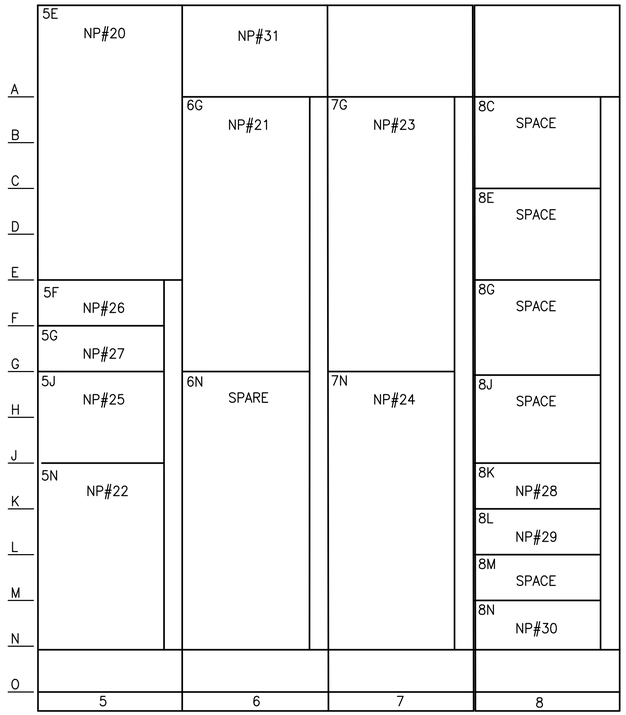

MCC 3B
ELEVATION
NTS

NAMEPLATE SCHEDULE

NP#	HEIGHT	WIDTH	LETTERS	FIRST LINE	SECOND LINE	THIRD LINE
1	2"	4"	1/8"	MCC-3A	MAIN DISCONNECT	FED FROM SUBSTATION A
2	2"	4"	1/8"	MIXED LIQUOR	RECYCLE PUMP #1	VFD-2106
3	2"	4"	1/8"	MIXED LIQUOR	BACKUP RECYCLE PUMP	VFD-2150
4	2"	4"	1/8"	TVSS UNIT	TVSS-3A	
5	2"	4"	1/8"	MRB #1	PERMEATE PUMP	VFD-2540
6	2"	4"	1/8"	MRB #3	PERMEATE PUMP	VFD-2740
7	2"	4"	1/8"	MBR #1 & #3	AIR BLOWER #1	FEEDER TO VFD-2127
8	2"	4"	1/8"	MBR #1 BLOWER AIR	MOTORIZED VALVE	FCV-2131
9	2"	4"	1/8"	MBR #3 BLOWER AIR	MOTORIZED VALVE	FCV-2231
10	2"	4"	1/8"	MBR #1 DIFFUSER	CLEANING VALVE	V-2506
11	2"	4"	1/8"	MBR #1 PERMEATE	FLOW CONTROL	MOTORIZED VALVE FCV-2540
12	2"	4"	1/8"	MBR #3 PERMEATE	FLOW CONTROL	MOTORIZED VALVE FCV-2740
13	2"	4"	1/8"	MCC-3A		
14	2"	4"	1/8"	MBR #1 & #3	AIR BLOWER #1	VFD-2127
20	2"	4"	1/8"	MCC-3B	MAIN DISCONNECT	FED FROM SUBSTATION A
21	2"	4"	1/8"	MIXED LIQUOR	RECYCLE PUMP #3	VFD-2175
22	2"	4"	1/8"	TVSS UNIT	TVSS-3B	
23	2"	4"	1/8"	MRB #2	PERMEATE PUMP	VFD-2440
24	2"	4"	1/8"	MRB #4	PERMEATE PUMP	VFD-2640
25	2"	4"	1/8"	MBR #1 & #3	AIR BLOWER #3	FEEDER TO VFD-2227
26	2"	4"	1/8"	MBR #2 BLOWER AIR	MOTORIZED VALVE	FCV-2331
27	2"	4"	1/8"	MBR #4 BLOWER AIR	MOTORIZED VALVE	FCV-2431
28	2"	4"	1/8"	MBR #2 PERMEATE	FLOW CONTROL	MOTORIZED VALVE FCV-2440
29	2"	4"	1/8"	MBR #4 PERMEATE	FLOW CONTROL	MOTORIZED VALVE FCV-2640
30	2"	4"	1/8"	MBR #4 DIFFUSER	CLEANING VALVE	V-2606
31	2"	4"	1/8"	MCC-3B		
32	2"	4"	1/8"	MBR #1 & #3	AIR BLOWER #3	VFD-2227

PROJECT WORK SHOWN ON THIS DRAWING IS ALL INCLUDED IN SCHEDULE A

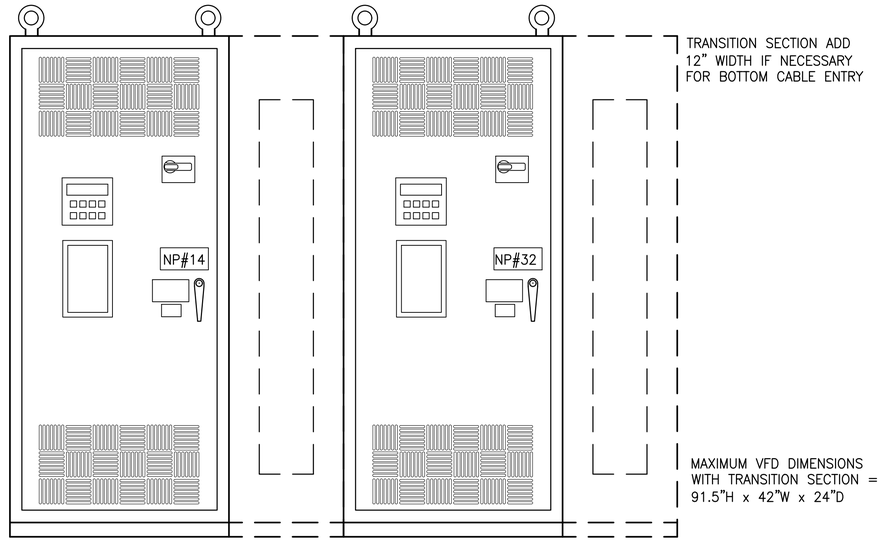

125 HP VFD'S
DETAIL 1 E208
SCALE: 1"=1'-0"

REVISIONS	DATE	BY

DESIGNED B. WILLIAMS
DRAWN D. PETERSON
CHECKED R. ROHLER
APPROVED B. BUNKER

ONE INCH AT FULL SCALE. IF NOT, SCALE ACCORDINGLY
FILE NAME PS1598102-E205
JOB No. 216-1598-102
DATE FEBRUARY 2018

ARTHUR G. STORER — STATE OF WASHINGTON — 34736 — REGISTERED PROFESSIONAL ENGINEER
FEBRUARY 23, 2018

Parametrix
ENGINEERING . PLANNING . ENVIRONMENTAL SCIENCES
1019 39TH AVENUE SE, SUITE 100 | PUYALLUP, WA 98374
P 253.604.6600
WWW.PARAMETRIX.COM

PROJECT NAME
THE CONSOLIDATED BOROUGH OF QUIL CEDA VILLAGE
MBR TREATMENT FACILITY UPGRADE
TULALIP, WASHINGTON

MBR BUILDING MCC 3A & 3B ELEVATIONS

DRAWING NO. 67 OF 157
E205

LAYOUT: E205 PATH: U:\PSO\Projects\Clients\1598-TulalipTribes\216-1598-102 MBR Upgrade\99Sves\CADD\DWG PLOTTED BY: peterden DATE: Friday, February 23, 2018 2:39:10 PM

NAME: **MOTOR CONTROL CENTER 3A** v 1.1

VOLTAGE: 480
PHASE: 3
WIRE: 3
HERTZ: 60

NEUTRAL BUS: NO
GROUND BUS: YES
MAIN BREAKER SIZE: 400 AMPS
MINIMUM BUS SIZE: 600 AMPS
FAULT CURRENT BRACING: 65,000 AMPS, RMS SYMMETRICAL

LOCATION: MBR BUILDING
FED FROM: SUBSTATION A

ASSET NUMBER	EQUIPMENT NAME OR LOAD DESCRIPTION	CONNECTED LOAD							LOAD TYPE	LTG	RCPT	MOTOR	HVAC	MISC	LARGEST MOTOR
		LOAD SIZE	LOAD UNIT	VOLT	PH	HP	AMPS	KVA							
ME-2125	MBR #1 & #3 AIR BLOWER #1	125	HP	480	3	125.0	156.0	129.7	LM	0.0	0.0	0.0	0.0	0.0	129.7
P-2100	MIXED LIQUOR RECYCLE PUMP #1	5	HP	480	3	5.0	7.6	6.3	M	0.0	0.0	6.3	0.0	0.0	0.0
P-2150	MIXED LIQUOR BACK-UP RECYCLE PUMP	5	HP	480	3	5.0	7.6	6.3	M	0.0	0.0	6.3	0.0	0.0	0.0
P-2540	MBR #1 PERMEATE PUMP	5	HP	480	3	5.0	7.6	6.3	M	0.0	0.0	6.3	0.0	0.0	0.0
P-2740	MBR #3 PERMEATE PUMP	5	HP	480	3	5.0	7.6	6.3	M	0.0	0.0	6.3	0.0	0.0	0.0
FCV-2131	BLOWER AIR TO MBR #1 FLOW CONTROL VALVE	1	HP	480	3	1.0	2.1	1.7	M	0.0	0.0	1.7	0.0	0.0	0.0
FCV-2231	BLOWER AIR TO MBR #3 FLOW CONTROL VALVE	1	HP	480	3	1.0	2.1	1.7	M	0.0	0.0	1.7	0.0	0.0	0.0
FCV-2540	MBR #1 PERMEATE FLOW CONTROL VALVE	1	HP	480	3	1.0	2.1	1.7	M	0.0	0.0	1.7	0.0	0.0	0.0
FCV-2740	MBR #3 PERMEATE FLOW CONTROL VALVE	1	HP	480	3	1.0	2.1	1.7	M	0.0	0.0	1.7	0.0	0.0	0.0
V-2506	MBR #1 AIR CONTROL VALVE	1	HP	480	3	1.0	2.1	1.7	M	0.0	0.0	1.7	0.0	0.0	0.0
	Connected Totals:									0.00	0.00	34.00	0.00	0.00	129.70

MOTOR CONTROL CENTER 3A LOAD CALCULATION:

		CONNECTED KVA	METHOD	NEC DEMAND	CALC. KVA
TOTAL LIGHTING (L) LOAD:	L	0.00	ALL @	100%	0.00
TOTAL RECEPTACLE (R) LOAD:	R	0.00	FIRST 10KVA @	100%	0.00
			REMAINDER OVER 10KVA	50%	0.00
TOTAL MOTOR (M) LOAD:	M	34.00	ALL @	100%	34.00
	LM	129.70	125% OF LARGEST	125%	162.12
TOTAL HVAC (H) LOAD:	H	0.00	ALL @	100%	0.00
TOTAL MISCELLANEOUS (X) LOAD:	X	0.00	ALL @	100%	0.00
TOTAL KVA:		163.70 KVA			196.12 KVA
AVERAGE AMPS @	480 volts	196.90 AMPS			235.90 AMPS

PROJECT WORK SHOWN ON THIS DRAWING IS ALL INCLUDED IN SCHEDULE A

NAME: **MOTOR CONTROL CENTER 3B** v 1.1

VOLTAGE: 480
PHASE: 3
WIRE: 3
HERTZ: 60

NEUTRAL BUS: NO
GROUND BUS: YES
MAIN BREAKER SIZE: 400 AMPS
MINIMUM BUS SIZE: 600 AMPS
FAULT CURRENT BRACING: 65,000 AMPS, RMS SYMMETRICAL

LOCATION: MBR BUILDING
FED FROM: SUBSTATION A

ASSET NUMBER	EQUIPMENT NAME OR LOAD DESCRIPTION	CONNECTED LOAD							LOAD TYPE	LTG	RCPT	MOTOR	HVAC	MISC	LARGEST MOTOR
		LOAD SIZE	LOAD UNIT	VOLT	PH	HP	AMPS	KVA							
ME-2200	MBR #1 & #3 AIR BLOWER #3	125	HP	480	3	125.0	156.0	129.7	LM	0.0	0.0	0.0	0.0	0.0	129.7
P-2175	MIXED LIQUOR RECYCLE PUMP #3	5	HP	480	3	5.0	7.6	6.3	M	0.0	0.0	6.3	0.0	0.0	0.0
P-3040	MBR #2 PERMEATE PUMP	5	HP	480	3	5.0	7.6	6.3	M	0.0	0.0	6.3	0.0	0.0	0.0
P-2640	MBR #4 PERMEATE PUMP	5	HP	480	3	5.0	7.6	6.3	M	0.0	0.0	6.3	0.0	0.0	0.0
FCV-2331	BLOWER AIR TO MBR #2 FLOW CONTROL VALVE	1	HP	480	3	1.0	2.1	1.7	M	0.0	0.0	1.7	0.0	0.0	0.0
FCV-2431	BLOWER AIR TO MBR #4 FLOW CONTROL VALVE	1	HP	480	3	1.0	2.1	1.7	M	0.0	0.0	1.7	0.0	0.0	0.0
FCV-3040	MBR #2 PERMEATE FLOW CONTROL VALVE	1	HP	480	3	1.0	2.1	1.7	M	0.0	0.0	1.7	0.0	0.0	0.0
FCV-2640	MBR #4 PERMEATE FLOW CONTROL VALVE	1	HP	480	3	1.0	2.1	1.7	M	0.0	0.0	1.7	0.0	0.0	0.0
V-2606	MBR #4 AIR CONTROL VALVE	1	HP	480	3	1.0	2.1	1.7	M	0.0	0.0	1.7	0.0	0.0	0.0
	Connected Totals:									0.00	0.00	27.69	0.00	0.00	129.70

MOTOR CONTROL CENTER 3B LOAD CALCULATION:

		CONNECTED KVA	METHOD	NEC DEMAND	CALC. KVA
TOTAL LIGHTING (L) LOAD:	L	0.00	ALL @	100%	0.00
TOTAL RECEPTACLE (R) LOAD:	R	0.00	FIRST 10KVA @	100%	0.00
			REMAINDER OVER 10KVA	50%	0.00
TOTAL MOTOR (M) LOAD:	M	27.69	ALL @	100%	27.69
	LM	129.70	125% OF LARGEST	125%	162.12
TOTAL HVAC (H) LOAD:	H	0.00	ALL @	100%	0.00
TOTAL MISCELLANEOUS (X) LOAD:	X	0.00	ALL @	100%	0.00
TOTAL KVA:		157.38 KVA			189.81 KVA
AVERAGE AMPS @	480 volts	189.30 AMPS			228.30 AMPS

PATH: U:\PSO\Projects\Clients\1598-TulalipTribes\216-1598-102 MBR Upgrade\99Sheets\CADD\DWG PLOTTED BY: peterden DATE: Friday, February 23, 2018
LAYOUT: E206

REVISIONS	DATE	BY

DESIGNED B. WILLIAMS
DRAWN D. PETERSON
CHECKED R. ROHLER
APPROVED B. BUNKER

ONE INCH AT FULL SCALE. IF NOT, SCALE ACCORDINGLY
FILE NAME PS1598102-E206
JOB No. 216-1598-102
DATE FEBRUARY 2018

ARTHUR G. STOKES — STATE OF WASHINGTON — 34736 — REGISTERED PROFESSIONAL ENGINEER

FEBRUARY 23, 2018

Parametrix
ENGINEERING . PLANNING . ENVIRONMENTAL SCIENCES
1019 39TH AVENUE SE, SUITE 100 | PUYALLUP, WA 98374
P 253.604.6600
WWW.PARAMETRIX.COM

PROJECT NAME
THE CONSOLIDATED BOROUGH OF QUIL CEDA VILLAGE
MBR TREATMENT FACILITY UPGRADE
TULALIP, WASHINGTON

MBR BUILDING MCC 3A & 3B LOAD CALCULATIONS & PANEL SCHEDULES

DRAWING NO. 68 OF 157

E206

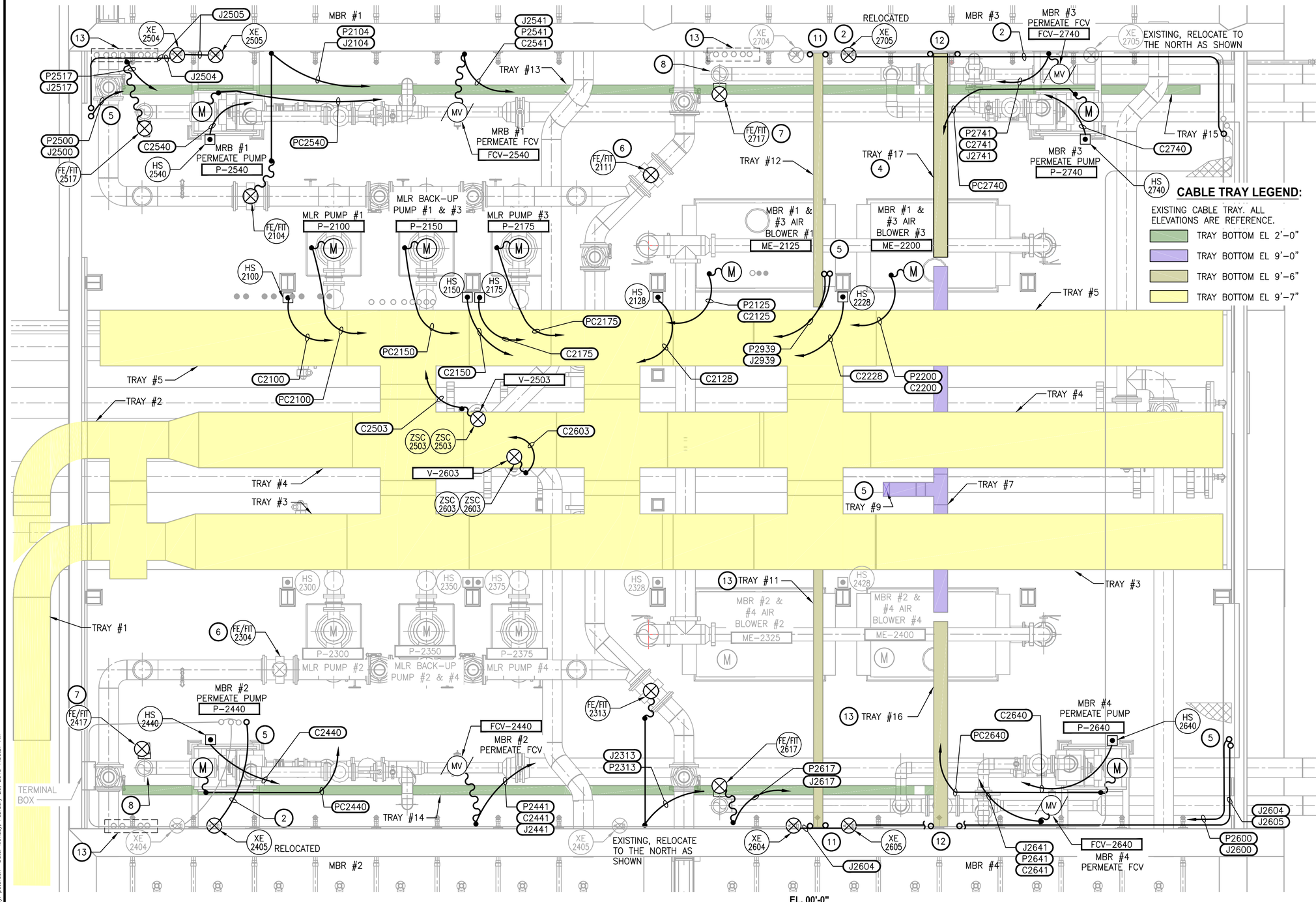

NOTES:

1. PROVIDE GRS CONDUIT DROP EXTENSIONS FROM CABLE TRAYS TO EQUIPMENT AS NECESSARY.
2. TURBIDITY SENSORS XE-2405 AND XE-2705 ARE EXISTING. RELOCATE SENSORS TO NEW LOCATIONS AS SHOWN. EXTEND CONDUIT FROM TURBIDITY TRANSMITTER XIT-2705 TO SENSOR XE-2705 AND PROVIDE NEW CABLE. REUSE EXISTING CONDUIT AND CABLE FROM TURBIDITY TRANSMITTER XIT-2405 TO SENSOR XE-2405.
3. EXISTING CONDUITS NOT SHOWN FOR CLARITY.
4. RAISE EXISTING SECTION OF CABLE TRAY 6" TO ACCOMMODATE NEW 8" PA PIPING. SEE MECHANICAL PLANS.
5. SEE SHEET E208 FOR CONTINUATION OF CONDUIT AND CABLE TRAY.
6. EXISTING 12" REC PIPING AND ASSOCIATED FLOW METERS SHALL BE RELOCATED, SEE MECHANICAL PLANS. EXTEND EXISTING CONDUIT TO NEW FLOW METER LOCATIONS AND REUSE CONDUCTORS IF POSSIBLE. IF CONDUCTORS ARE NOT OF SUFFICIENT LENGTH, PULL NEW CONDUCTORS AND TERMINATE.
7. EXISTING 8" PERMEATE PIPING AND ASSOCIATED FLOW METERS SHALL BE RELOCATED, SEE MECHANICAL PLANS. EXTEND EXISTING CONDUIT TO NEW FLOW METER LOCATIONS AND REUSE CONDUCTORS IF POSSIBLE. IF CONDUCTORS ARE NOT OF SUFFICIENT LENGTH, PULL NEW CONDUCTORS AND TERMINATE.
8. DEMOLISH UPPER CARTRIDGE PERMEATE VALVES D-2419, D-2719 AND ASSOCIATED CONDUIT AND CABLE. (VALVES NOT SHOWN)
9. SEE SHEETS E7 AND E8 FOR CIRCUIT SCHEDULE.
10. IN GENERAL, ALL CONDUIT ASSOCIATED WITH EQUIPMENT AND INSTRUMENTATION SHOWN ON THIS SHEET LOCATED NEAR THE OUTER WALLS OF THE MBR BUILDING SHALL ABIDE BY THE FOLLOWING CONDUIT ROUTING SCHEME, UNLESS OTHERWISE INDICATED ON THE CIRCUIT SCHEDULE SHOWN ON SHEETS E7 AND E8:
    a. POWER(P) CONDUITS SHALL BE ROUTED UNDERNEATH THE WALKWAYS WHERE SHOWN AND VERTICALLY AGAINST THE OUTER WALLS DOWN TO CABLE TRAYS #13, 14, AND 15 AT ELEVATION 2'-0". CABLE TRAYS SHALL BE UTILIZED FOR THE REMAINDER OF THE CIRCUITS UNLESS WHERE TRANSITIONING TO CABLE TRAYS #11 AND 12 AT ELEVATION 9'-6".
    b. CONTROL(C) AND SIGNAL(J) CONDUITS SHALL BE ROUTED UNDERNEATH THE WALKWAYS WHERE SHOWN AND VERTICALLY AGAINST THE OUTER WALLS UP TO CABLE TRAYS #6, 8, AND 10 SHOWN ON SHEET E208 AT ELEVATION 15'-6". CABLE TRAYS SHALL BE UTILIZED FOR THE REMAINDER OF THE CIRCUITS UNLESS WHERE TRANSITIONING TO CABLE TRAYS #16 AND 17.
11. PROVIDE ADDITIONAL CONDUIT AS NEEDED TO TRANSITION BETWEEN CABLE TRAYS #13, 14, AND 15 AT ELEVATION 2'-0" TO CABLE TRAYS #11 AND 12 AT ELEVATION 9'-6" AND CABLE TRAYS #6 AND #8 AT ELEVATION 15'-6".
12. PROVIDE ADDITIONAL CONDUIT AS NEEDED TO TRANSITION BETWEEN CABLE TRAYS #6, 8 AND 10 AT ELEVATION 15'-6" TO CABLE TRAYS #16 AND 17 AT ELEVATION 9'-6".
13. RELOCATE EXISTING CONDUITS AND CABLE TRAY WHERE NECESSARY TO ACCOMMODATE NEW PIPING AND CONDUIT.

CABLE TRAY LEGEND:

EXISTING CABLE TRAY. ALL ELEVATIONS ARE REFERENCE.

- TRAY BOTTOM EL 2'-0"
- TRAY BOTTOM EL 9'-0"
- TRAY BOTTOM EL 9'-6"
- TRAY BOTTOM EL 9'-7"

EL. 00'-0"
PLAN
SCALE: 3/8"=1'-0"

PROJECT WORK SHOWN ON THIS DRAWING IS ALL INCLUDED IN SCHEDULE B

	REVISIONS	DATE	BY

DESIGNED B. WILLIAMS
DRAWN D. PETERSON
CHECKED R. ROHLER
APPROVED B. BUNKER

ONE INCH AT FULL SCALE. IF NOT, SCALE ACCORDINGLY
FILE NAME PS1598102-E207.DWG
JOB No. 2161598102
DATE FEBRUARY 2018

ARTHUR G. STOKES — STATE OF WASHINGTON — 34736 — REGISTERED PROFESSIONAL ENGINEER
FEBRUARY 23, 2018

Parametrix
ENGINEERING . PLANNING . ENVIRONMENTAL SCIENCES
1019 39TH AVENUE SE, SUITE 100 | PUYALLUP, WA 98374
P 253.604.6600
WWW.PARAMETRIX.COM

PROJECT NAME
THE CONSOLIDATED BOROUGH OF QUIL CEDA VILLAGE
MBR TREATMENT FACILITY UPGRADE
TULALIP, WASHINGTON

MBR BUILDING POWER AND CONTROL PLAN EL 0.00' - 11.00'

DRAWING NO. 69 OF 157
E207

File: PS1598102-E207.dwg Plotted by: peterden Date: Monday, February 26, 2018 7:50:27 AM

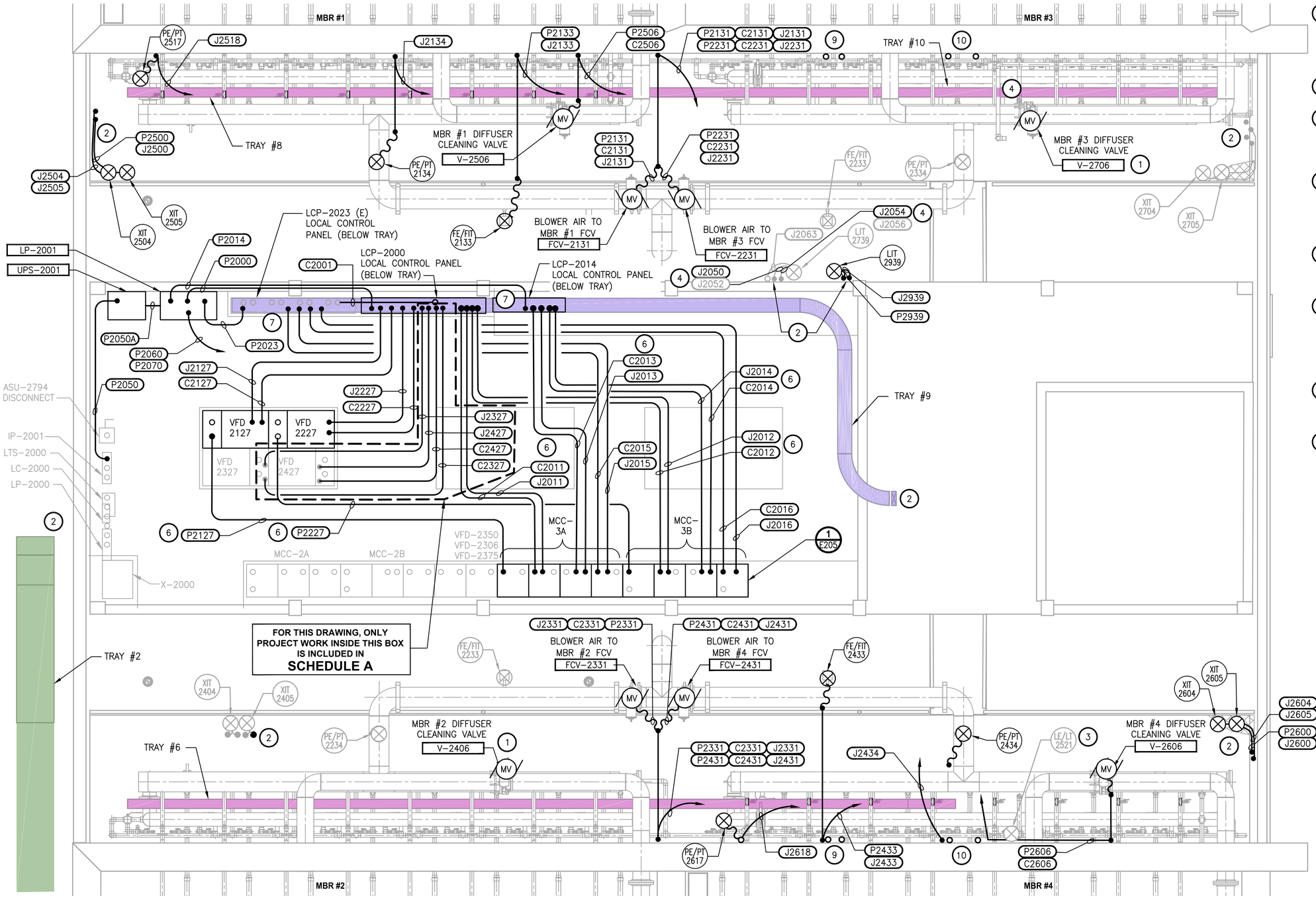

NOTES:

1. EXISTING 10"PA PIPING AND ASSOCIATED MOTORIZED VALVES SHALL BE RELOCATED, SEE MECHANICAL PLANS. EXTEND EXISTING CONDUIT TO NEW VALVE LOCATIONS AND REUSE CONDUCTORS IF POSSIBLE. IF CONDUCTORS ARE NOT OF SUFFICIENT LENGTH, PULL NEW CONDUCTORS AND TERMINATE.
2. SEE SHEET E207 FOR CONTINUATION OF CONDUIT AND CABLE TRAY.
3. RELOCATE EXISTING LEVEL TRANSMITTER FOR THE CLS RESERVOIR SO THAT IT DOES NOT INTERFERE WITH NEW MECHANICAL PIPING. SEE MECHANICAL PLANS. EXTEND CONDUIT AND PULL NEW CONDUCTORS IF REQUIRED.
4. AS-BUILT DRAWINGS FROM 2003 MBR TREATMENT FACILITY CONSTRUCTION SHOW SIGNAL CONDUITS FROM EACH MBR (SEE SHEET E209) TERMINATING AT LIT-2759.
5. EXISTING CONDUITS NOT SHOWN FOR CLARITY.
6. ROUTE CONDUCTORS IN CABLE TRAY LOCATED DIRECTLY BENEATH THE ELECTRICAL ROOM FLOOR. SEE SHEET E7 & E8 FOR CONDUIT AND CABLE SCHEDULE AND SHEET E208 FOR CABLE TRAY PLAN.
7. PROVIDE A MINIMUM OF 4, 2" CORE DRILLS THROUGH THE ELECTRICAL ROOM FLOOR. SEE SHEET E11 DETAIL 1. COORDINATE PENETRATION LOCATIONS WITH THE STRUCTURAL ENGINEER PRIOR TO DRILLING.
8. SEE SHEET E7 AND E8 FOR CIRCUIT SCHEDULE.
9. PROVIDE ADDITIONAL CONDUIT AS NEEDED TO TRANSITION BETWEEN CABLE TRAYS #11 AND 12 AT ELEVATION 9'-6" TO CABLE TRAYS #6 AND #8 AT ELEVATION 15'-6".
10. PROVIDE ADDITIONAL CONDUIT AS NEEDED TO TRANSITION BETWEEN CABLE TRAYS #16 AND 17 AT ELEVATION 9'-6" TO CABLE TRAYS #6, 8 AND 10 AT ELEVATION 15'-6".
11. SEE SHEET E11, DETAIL 1 FOR CONDUIT PENETRATIONS THROUGH FLOOR.
12. IN GENERAL, ALL CONDUIT ASSOCIATED WITH EQUIPMENT AND INSTRUMENTATION SHOWN ON THIS SHEET LOCATED NEAR THE OUTER WALLS OF THE MBR BUILDING SHALL ABIDE BY THE FOLLOWING CONDUIT ROUTING SCHEME, UNLESS OTHERWISE INDICATED ON THE CIRCUIT SCHEDULE SHOWN ON SHEETS E7 AND E8:
    a. POWER(P) CONDUITS SHALL BE ROUTED ALONG THE CEILING WHERE SHOWN AND VERTICALLY AGAINST THE OUTER WALLS DOWN TO CABLE TRAYS #6, 8, AND 10 AT ELEVATION 15'-6". CABLE TRAYS SHALL BE UTILIZED FOR THE REMAINDER OF THE CIRCUITS UNLESS WHERE TRANSITIONING TO CABLE TRAYS #11 AND 12 AT ELEVATION 9'-6".
    b. CONTROL(C) AND SIGNAL(J) CONDUITS SHALL BE ROUTED ALONG THE CEILING WHERE SHOWN AND VERTICALLY AGAINST THE OUTER WALLS DOWN TO CABLE TRAYS #6, 8, AND 10 AT ELEVATION 15'-6". CABLE TRAYS SHALL BE UTILIZED FOR THE REMAINDER OF THE CIRCUITS UNLESS WHERE TRANSITIONING TO CABLE TRAYS #16 AND 17.
13. GROUND NEW MCC'S TO EXISTING GROUND GRID USING #4/0 BARE COPPER.

CABLE TRAY LEGEND:

- TRAY BOTTOM EL 12'-1"
- TRAY BOTTOM EL 15'-6"
- TRAY BOTTOM EL 23'-0"

ALL PROJECT WORK OUTSIDE THE BOX NOTED FOR SCHEDULE A, SHALL BE SCHEDULE B

EL.=11'-0"

PLAN

SCALE: 3/8"=1'-0"

	REVISIONS	DATE	BY

DESIGNED B. WILLIAMS
DRAWN D. PETERSON
CHECKED R. ROHLER
APPROVED B. BUNKER

ONE INCH AT FULL SCALE. IF NOT, SCALE ACCORDINGLY

FILE NAME PS1598102-E208.DWG
JOB No. 2161598102
DATE FEBRUARY 2018

ARTHUR G. STORK — STATE OF WASHINGTON — 34738 — REGISTERED PROFESSIONAL ENGINEER

FEBRUARY 23, 2018

Parametrix
ENGINEERING . PLANNING . ENVIRONMENTAL SCIENCES
1019 39TH AVENUE SE, SUITE 100 | PUYALLUP, WA 98374
P 253.604.6600
WWW.PARAMETRIX.COM

PROJECT NAME
THE CONSOLIDATED BOROUGH OF QUIL CEDA VILLAGE
MBR TREATMENT FACILITY UPGRADE
TULALIP, WASHINGTON

MBR BUILDING POWER AND CONTROL PLAN EL 11.00' - 26.00'

DRAWING NO. 70 OF 157

E208

File: PS1598102-E208.dwg Plotted by: peterden Date: Friday, February 23, 2018 5:12:29 PM

NOTES:

1. CONTRACTOR SHALL DETERMINE THE ROUTING OF THESE EXISTING CONDUITS PRIOR TO BID. CONDUIT END POINT IS UNKNOWN. EXTEND AS REQUIRED PER THE CIRCUIT SCHEDULE.
2. SEE SHEET E7 & E8 FOR CIRCUIT SCHEDULE.
3. SEE SHEET E11, DETAIL 2 FOR MOUNTING FLOAT SWITCHES.
4. MOUNT ULTRASONIC LEVEL TRANSMITTERS USING MANUFACTURER PROVIDED UNIVERSAL BOX BRACKET.

PROJECT WORK SHOWN ON THIS DRAWING IS ALL INCLUDED IN SCHEDULE B

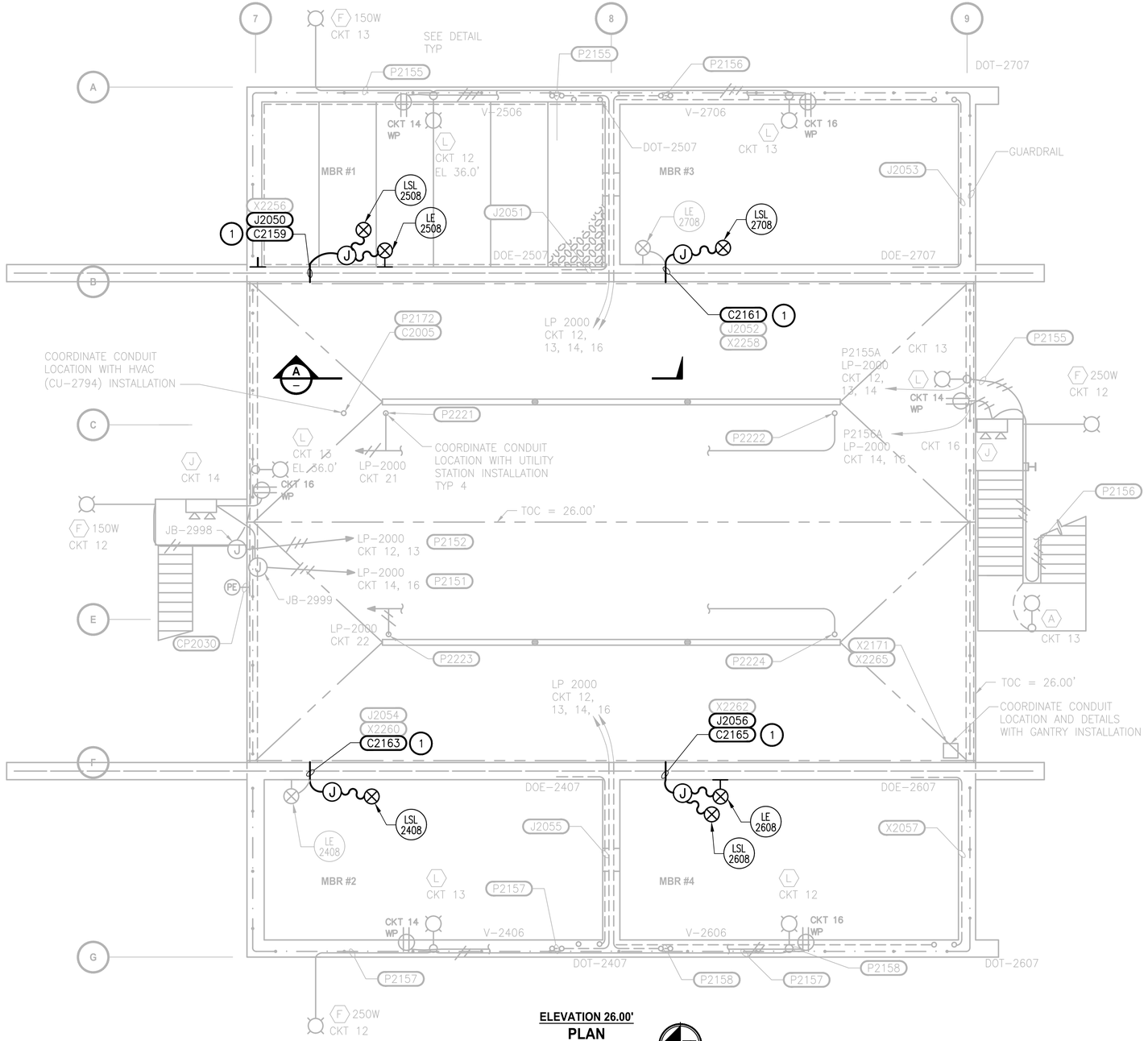

ELEVATION 26.00'
PLAN
3/16"=1'-0"

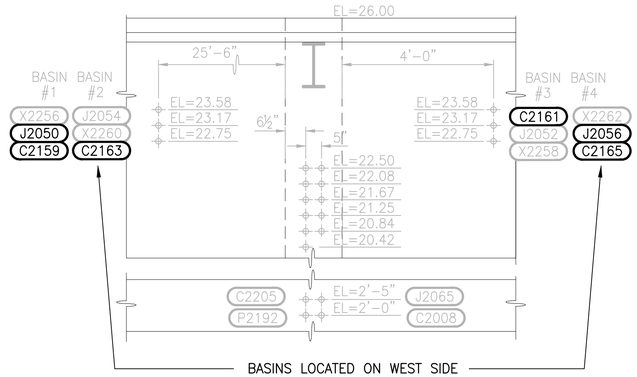

SECTION A
1/2"=1'-0"

REVISIONS	DATE	BY

DESIGNED B. WILLIAMS
DRAWN D. PETERSON
CHECKED R. ROHLER
APPROVED B. BUNKER

ONE INCH AT FULL SCALE. IF NOT, SCALE ACCORDINGLY
FILE NAME PS1598102-E209
JOB No. 216-1598-102
DATE FEBRUARY 2018

ARTHUR G. STOKES, STATE OF WASHINGTON, 34736, REGISTERED PROFESSIONAL ENGINEER
FEBRUARY 23, 2018

Parametrix
ENGINEERING . PLANNING . ENVIRONMENTAL SCIENCES
1019 39TH AVENUE SE, SUITE 100 | PUYALLUP, WA 98374
P 253.604.6600
WWW.PARAMETRIX.COM

PROJECT NAME
THE CONSOLIDATED BOROUGH OF QUIL CEDA VILLAGE
MBR TREATMENT FACILITY UPGRADE
TULALIP, WASHINGTON

MBR BUILDING POWER AND CONTROL PLAN EL 26.00'

DRAWING NO. 71 OF 157
E209

LAYOUT: E209 PATH: U:\PSO\Projects\Clients\1598-TulalipTribes\216-1598-102 MBR Upgrade\99Svcs\CADD\DWG PLOTTED BY: peterden DATE: Friday, February 23, 2018 2:54:38 PM

PATH: U:\PSO\Projects\Clients\1598-TulalipTribes\216-1598-102 MBR Upgrade\99Svce\CADD\DWG PLOTTED BY: vondejam DATE: Friday, February 23, 2018 5:42:02 PM LAYOUT: I1

MBR CONTROL ROOM

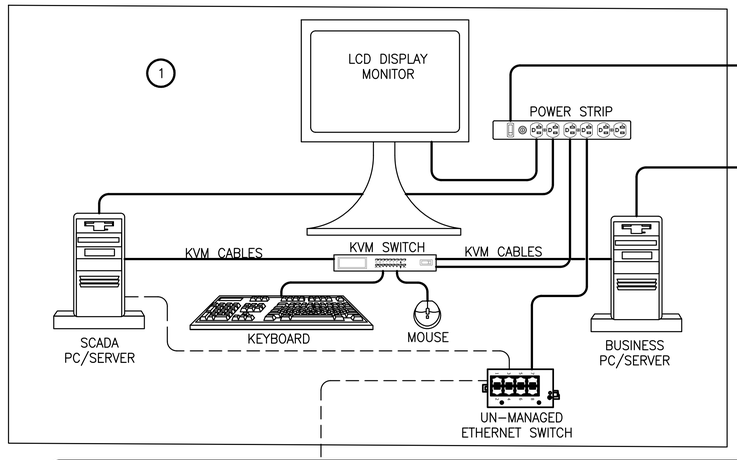

CKT 38
CKT 40
CKT 22
CKT 24
CKT 26

LP-2001

UPS 4.3 KVA

KEY NOTES:

1. ALL COMPONENTS IN THE MBR CONTROL ROOM WILL BE PROVIDED BY TULALIP TRIBE.

ALL PROJECT WORK OUTSIDE THE BOX NOTED FOR SCHEDULE B, SHALL BE SCHEDULE A

FOR THIS DRAWING, ONLY PROJECT WORK INSIDE THIS BOX IS INCLUDED IN SCHEDULE B

SUBSTATION A

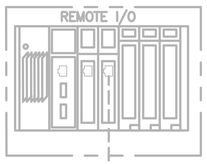

MBR BUILDING

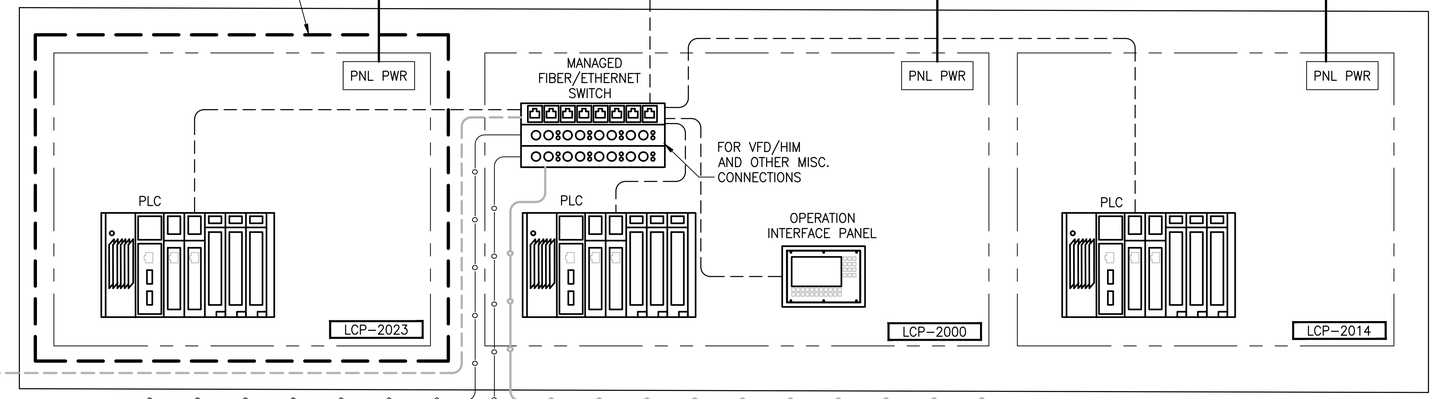

HEADWORKS

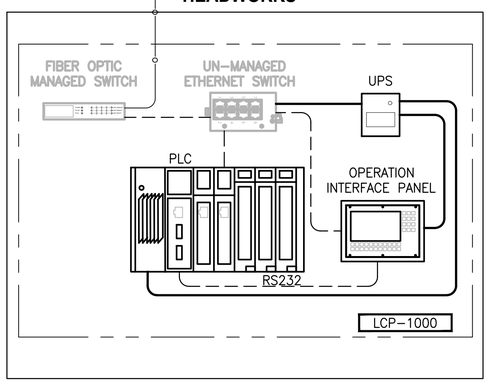

EFFLUENT BUILDING

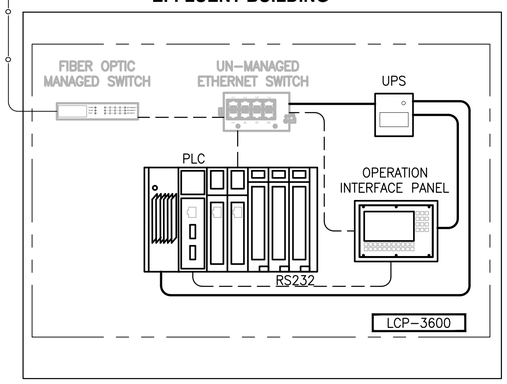

88TH STREET PUMP STATION

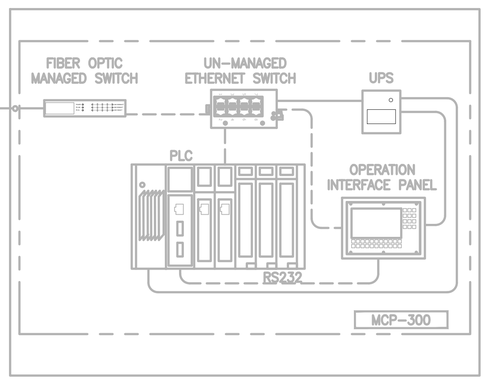

	REVISIONS	DATE	BY

DESIGNED A. STOKES
DRAWN J. VONDERAHE
CHECKED J. MURPHY
APPROVED B. BUNKER

ONE INCH AT FULL SCALE. IF NOT, SCALE ACCORDINGLY

FILE NAME PS1598102-I1
JOB No. 216-1598-102
DATE FEBRUARY 2018

ARTHUR G. STOKES — STATE OF WASHINGTON — 34736 — REGISTERED PROFESSIONAL ENGINEER

FEBRUARY 23, 2018

Parametrix
ENGINEERING . PLANNING . ENVIRONMENTAL SCIENCES
1019 39TH AVENUE SE, SUITE 100 | PUYALLUP, WA 98374
P 253.604.6600
WWW.PARAMETRIX.COM

PROJECT NAME
THE CONSOLIDATED BOROUGH OF QUIL CEDA VILLAGE
MBR TREATMENT FACILITY UPGRADE
TULALIP, WASHINGTON

NETWORK BLOCK DIAGRAM

DRAWING NO. 72 OF 157

I1

LCP-1000 EXTERIOR DEMO
PHOTO 1
NTS

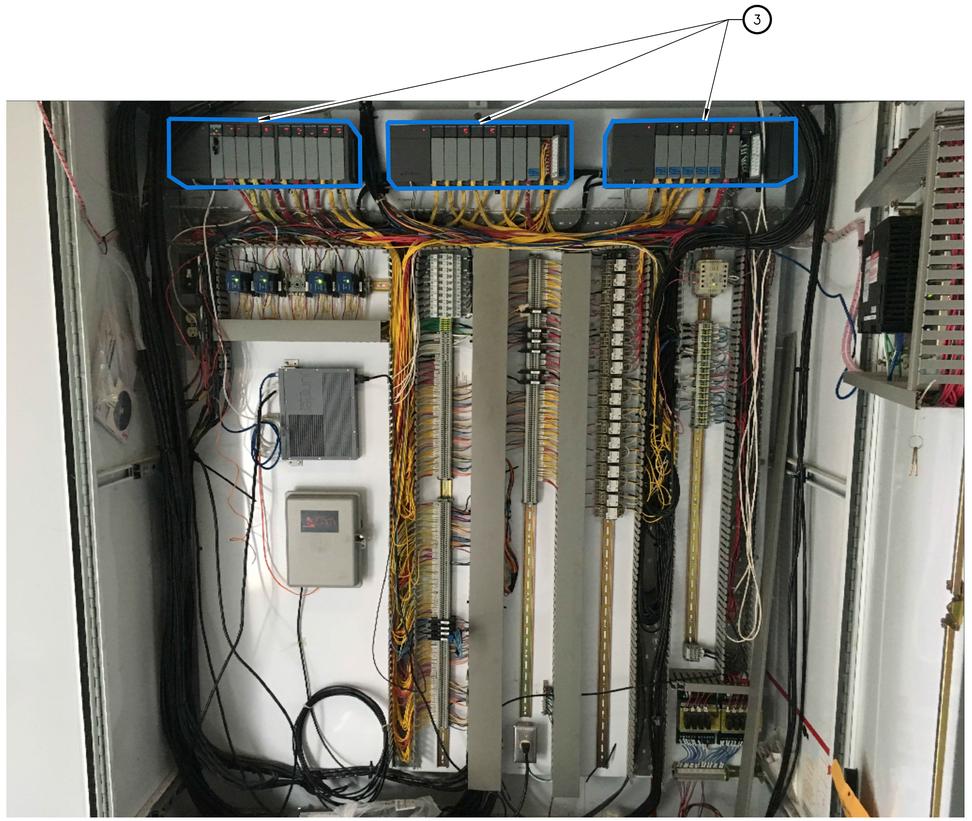

LCP-1000 INTERIOR DEMO
PHOTO 2
NTS

NOTES:

1. REMOVE AND COVER EXISTING CUTOUT WITH 16 GAUGE STEEL PLATE. PLATE SHALL EXTEND A MINIMUM OF 1/2" BEYOND CUTOUT ON ALL SIDES. PLATE SHALL BE PAINTED TO MATCH COLOR OF ENCLOSURE DOOR.
2. REMOVE AND REPLACE WITH NEW HMI.
3. REMOVE AND REPLACE WITH NEW PLC. SEE SHEET I100 FOR PLC RACK CONFIGURATION.

PROJECT WORK SHOWN ON THIS DRAWING IS ALL INCLUDED IN SCHEDULE A

LEGEND:

- DEMOLITION OR REMOVAL
- REMOVE AND REPLACE

	REVISIONS	DATE	BY

DESIGNED A. STOKES
DRAWN D. MILES
CHECKED J. MURPHY
APPROVED B. BUNKER

ONE INCH AT FULL SCALE. IF NOT, SCALE ACCORDINGLY

FILE NAME PS1598102-I-D101
JOB No. 216-1598-102
DATE FEBRUARY 2018

ARTHUR G. STOKES — STATE OF WASHINGTON — 34736 — REGISTERED PROFESSIONAL ENGINEER

FEBRUARY 23, 2018

Parametrix
ENGINEERING . PLANNING . ENVIRONMENTAL SCIENCES
1019 39TH AVENUE SE, SUITE 100 | PUYALLUP, WA 98374
P 253.604.6600
WWW.PARAMETRIX.COM

PROJECT NAME
THE CONSOLIDATED BOROUGH OF QUIL CEDA VILLAGE
MBR TREATMENT FACILITY UPGRADE
TULALIP, WASHINGTON

HEADWORKS CONTROL PANEL DEMOLITION LCP-1000

DRAWING NO. 73 OF 157
I-D101

PATH: U:\PSO\Projects\Clients\1598-TulalipTribes\216-1598-102 MBR Upgrade\99Svcs\CADD\DWG
PLOTTED BY: vondejam DATE: Friday, February 23, 2018 8:59:48 AM
LAYOUT: ID101

LCP-2000 EXTERIOR DEMO - MIDDLE AND RIGHT DOORS

PHOTO 1 / –

NTS

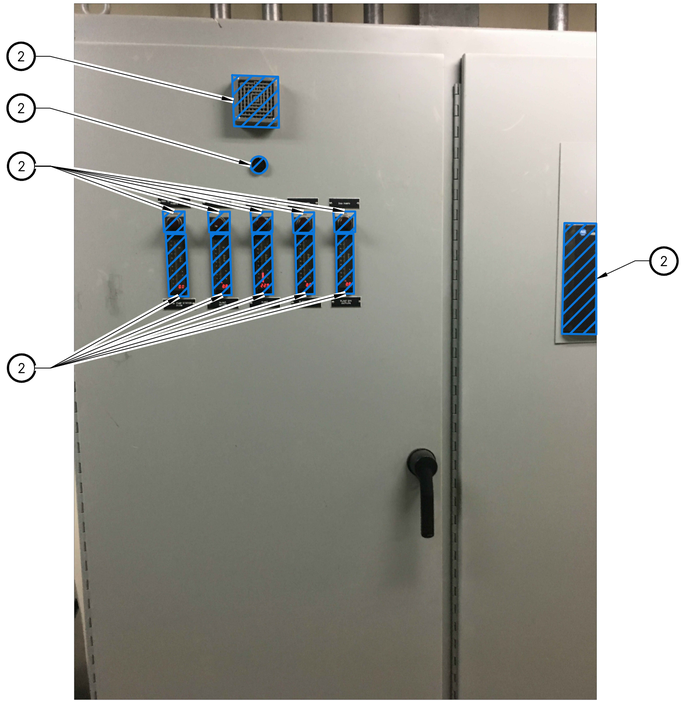

LCP-2000 EXTERIOR DEMO - LEFT DOOR

PHOTO 2 / –

NTS

LCP-2000 INTERIOR DEMO

PHOTO 3 / –

NTS

NOTES:

1. REMOVE AND REPLACE WITH NEW LEGEND PLATE "MEMBRANE REACTOR PLANT LCP-2023". (LCP-2000 TO BE RE-DESIGNATED AS LCP-2023).
2. REMOVE AND COVER EXISTING CUTOUT WITH 16 GAUGE STEEL PLATE. PLATE SHALL EXTEND A MINIMUM OF 1/2" BEYOND CUTOUT ON ALL SIDES. PLATE SHALL BE PAINTED TO MATCH COLOR OF ENCLOSURE DOOR. MANUFACTURED HOLE PLUGS MAY BE USED TO COVER 30.5MM PILOT DEVICE CUTOUTS.
3. REMOVE AND REPLACE WITH NEW PLC. SEE SHEET I240 FOR PLC RACK CONFIGURATION.

PROJECT WORK SHOWN ON THIS DRAWING IS ALL INCLUDED IN SCHEDULE B

LEGEND:

- DEMOLITION OR REMOVAL
- REMOVE AND REPLACE

	REVISIONS	DATE	BY

DESIGNED A. STOKES
DRAWN D. MILES
CHECKED J. MURPHY
APPROVED B. BUNKER

ONE INCH AT FULL SCALE. IF NOT, SCALE ACCORDINGLY

FILE NAME PS1598102-I-D201
JOB No. 216-1598-102
DATE FEBRUARY 2018

ARTHUR G. STOKES — STATE OF WASHINGTON — 34736 — REGISTERED PROFESSIONAL ENGINEER

FEBRUARY 23, 2018

Parametrix
ENGINEERING . PLANNING . ENVIRONMENTAL SCIENCES
1019 39TH AVENUE SE, SUITE 100 | PUYALLUP, WA 98374
P 253.604.6600
WWW.PARAMETRIX.COM

PROJECT NAME
THE CONSOLIDATED BOROUGH OF QUIL CEDA VILLAGE
MBR TREATMENT FACILITY UPGRADE
TULALIP, WASHINGTON

MBR CONTROL PANEL DEMOLITION LCP-2000

DRAWING NO. 74 OF 157

I-D201

PATH: U:\PSO\Projects\Clients\1598-TulalipTribes\216-1598-102 MBR Upgrade\99Sveb\CADD\DWG PLOTTED BY: vondejam DATE: Friday, February 23, 2018 9:47:28 AM LAYOUT: ID201

LCP 3600 EXTERIOR DEMO
PHOTO 1
NTS

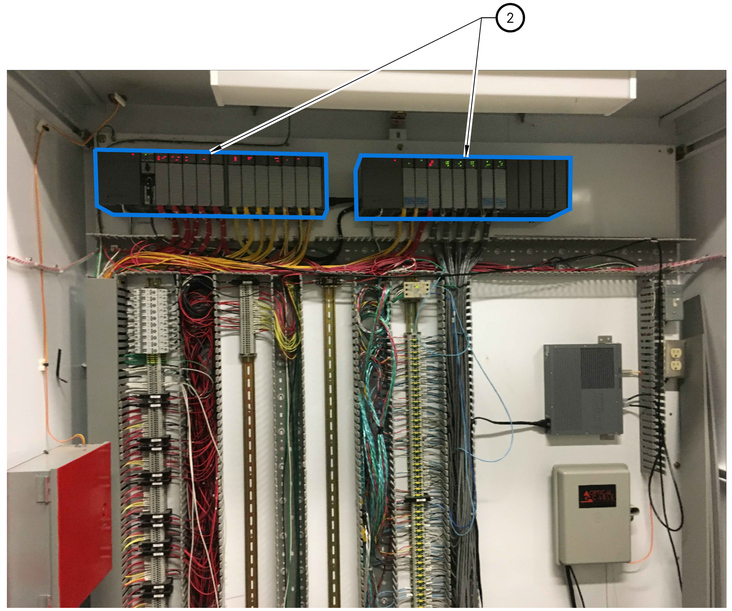

LCP-3600 INTERIOR DEMO
PHOTO 2
NTS

NOTES:

1. REMOVE AND COVER EXISTING CUTOUT WITH 16 GAUGE STEEL PLATE. PLATE SHALL EXTEND A MINIMUM OF 1/2" BEYOND CUTOUT ON ALL SIDES. PLATE SHALL BE PAINTED TO MATCH COLOR OF ENCLOSURE DOOR. MANUFACTURED HOLE PLUGS MAY BE USED TO COVER 30.5MM PILOT DEVICE CUTOUTS.
2. REMOVE AND REPLACE WITH NEW PLC. SEE SHEET I300 FOR PLC RACK CONFIGURATION.
3. REMOVE AND REPLACE WITH NEW HMI.

PROJECT WORK SHOWN ON THIS DRAWING IS ALL INCLUDED IN SCHEDULE A

LEGEND:

DEMOLITION OR REMOVAL

REMOVE AND REPLACE

	REVISIONS	DATE	BY

DESIGNED A. STOKES
DRAWN D. MILES
CHECKED J. MURPHY
APPROVED B. BUNKER

ONE INCH AT FULL SCALE. IF NOT, SCALE ACCORDINGLY

FILE NAME PS1598102-I-D301
JOB No. 216-1598-102
DATE FEBRUARY 2018

ARTHUR G. STOKES — STATE OF WASHINGTON — 34736 — REGISTERED PROFESSIONAL ENGINEER

FEBRUARY 23, 2018

Parametrix
ENGINEERING . PLANNING . ENVIRONMENTAL SCIENCES
1019 39TH AVENUE SE, SUITE 100 | PUYALLUP, WA 98374
P 253.604.6600
WWW.PARAMETRIX.COM

PROJECT NAME
THE CONSOLIDATED BOROUGH OF QUIL CEDA VILLAGE
MBR TREATMENT FACILITY UPGRADE
TULALIP, WASHINGTON

EFFLUENT CONTROL PANEL DEMOLITION LCP-3600

DRAWING NO. 75 OF 157
I-D301

LAYOUT: ID301 PATH: U:\PSO\Projects\Clients\1598-TulalipTribes\216-1598-102 MBR Upgrade\99Svcs\CADD\DWG PLOTTED BY: vondejpm DATE: Friday, February 23, 2018 8:54:29 AM

NOTES:

1. PLC RACK ASSEMBLY SHALL REPLACE THE EXISTING PLC IN LCP-1000.
2. REFER TO SECTION 40 61 13 FOR SYSTEM INTEGRATOR SEQUENCING.
3. CONNECT RACKS WITH 1769-CRL3 EXPANSION CABLE.

PROJECT WORK SHOWN ON THIS DRAWING IS ALL INCLUDED IN SCHEDULE A

RACK 01

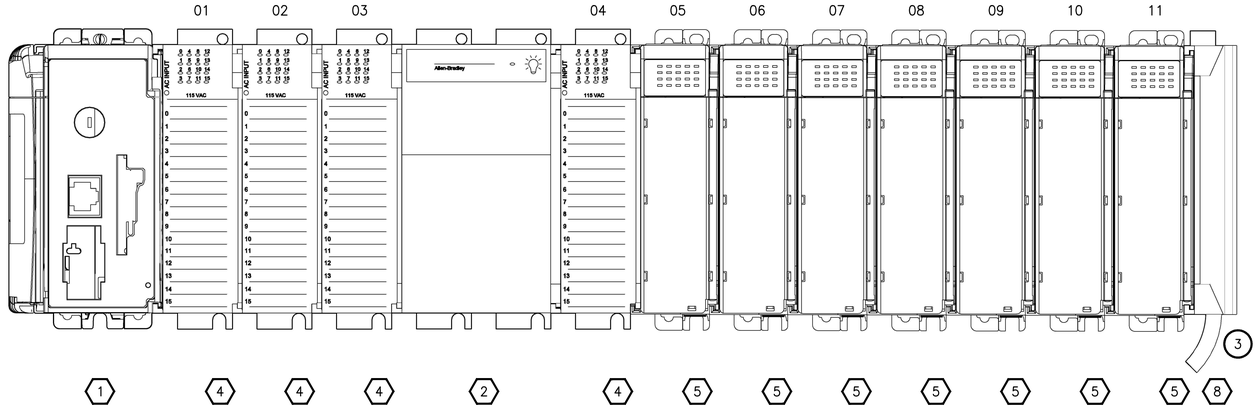

RACK 02

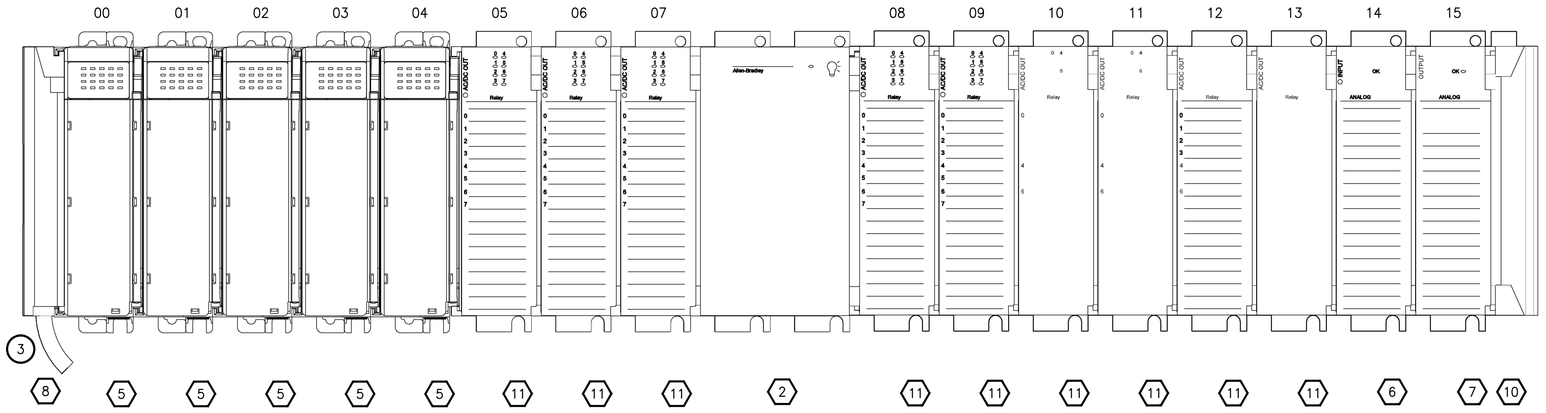

LCP-1000 RACK LAYOUT LEGEND

1	1769-L36ERM	COMPACTLOGIX CONTROLLER
2	1769-PA4	POWER SUPPLY 120/240 VAC INPUT
3	NOT USED	
4	1769-IA16	16 POINT 120 VAC INPUT MODULE
5	1769-IA8I	8 POINT 120 VAC ISOLATED INPUT MODULE
6	1769-IF16C	16 CHANNEL COMPACT HIGH-DENSITY ANALOG VOLTAGE INPUT MODULE
7	1769-OF8C	8 CHANNEL ANALOG CURRENT OUTPUT MODULE
8	1769-CRL3	1M RIGHT-TO-LEFT BUS EXPANSION CABLE
9	NOT USED	
10	1769-ECR	RIGHT END CAP/TERMINATOR
11	1769-OW8I	8 POINT VAC/VDC ISOLATED RELAY OUTPUT MODULE

	REVISIONS	DATE	BY
1	PLC PROCESSOR CHANGE	3-29-18	AS

DESIGNED J. VONDERAHE
DRAWN J. VONDERAHE
CHECKED J. MURPHY
APPROVED B. BUNKER

ONE INCH AT FULL SCALE. IF NOT, SCALE ACCORDINGLY

FILE NAME P51598102-I100
JOB No. 216-1598-102
DATE FEBRUARY 2018

ARTHUR G. STOKES STATE OF WASHINGTON 34736 REGISTERED PROFESSIONAL ENGINEER

MARCH 29, 2018

Parametrix
ENGINEERING . PLANNING . ENVIRONMENTAL SCIENCES
1019 39TH AVENUE SE, SUITE 100 | PUYALLUP, WA 98374
P 253.604.6600
WWW.PARAMETRIX.COM

PROJECT NAME
THE CONSOLIDATED BOROUGH OF QUIL CEDA VILLAGE
MBR TREATMENT FACILITY UPGRADE
TULALIP, WASHINGTON

LCP-1000 PLC RACK ASSEMBLY

DRAWING NO. 76 OF 157

I100

PATH: U:\PSO\Projects\Clients\1598-TulalipTribes\216-1598-102 MBR Upgrade\99Svcs\CADD\DWG PLOTTED BY: milesdor DATE: Thursday, March 29, 2018 8:00:00 AM LAYOUT: I100

LCP-1000

FIELD	TERMINAL BLOCKS	PLC

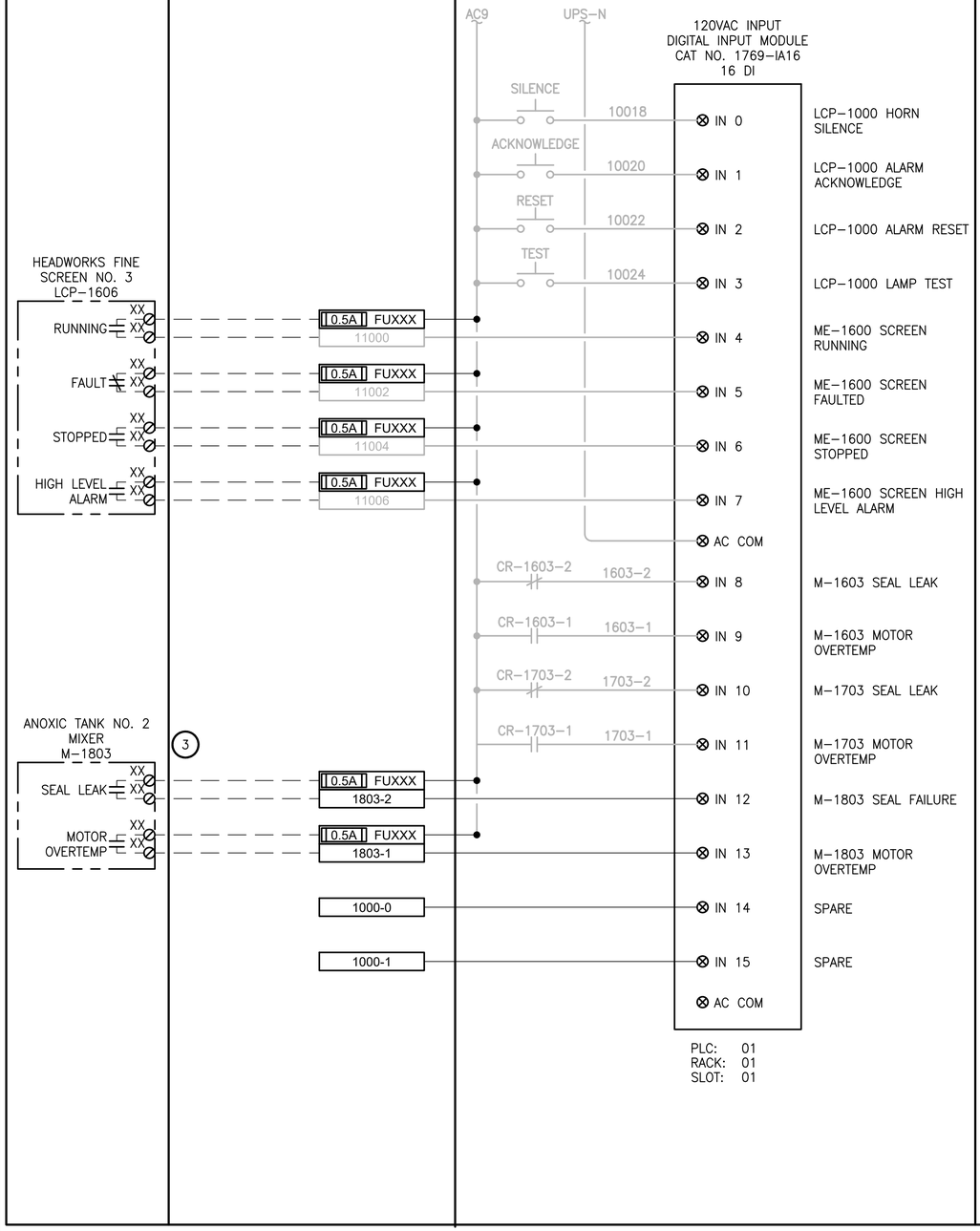

FIELD	TERMINAL BLOCKS	PLC

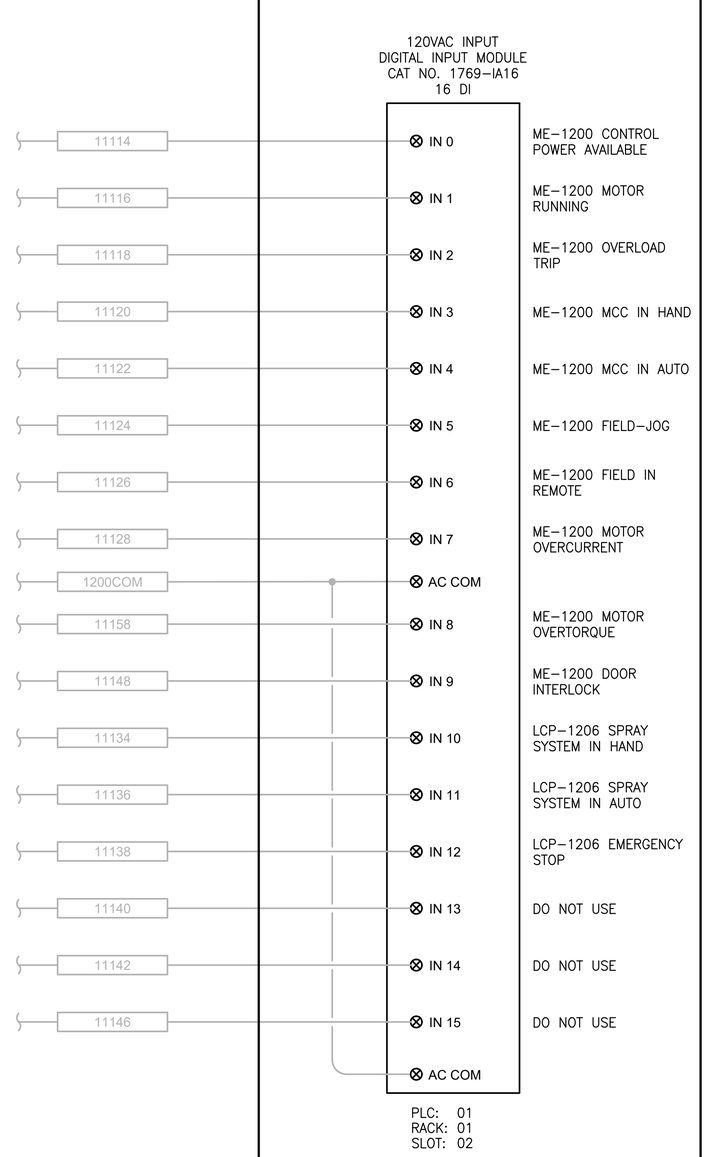

NOTES:

1. CONTRACTOR TO REPLACE EXISTING 1746-IA16 WITH NEW 1769-IA16
2. NOT ALL EXISTING TERMINAL BLOCKS, PANEL DEVICES, OR FIELD CONNECTIONS ARE SHOWN ON THE DRAWING.
3. (3) REFER TO SHEET E9 FOR MOTOR ELEMENTARY DIAGRAM.
4. EXISTING COMPONENT LABELING FROM TSI AS-BUILT DRAWINGS. CONTRACTOR IS RESPONSIBLE FOR FIELD-VERIFYING THIS INFORMATION.

PROJECT WORK SHOWN ON THIS DRAWING IS ALL INCLUDED IN SCHEDULE A

LEGEND:

- WIRING INTERNAL TO PANEL
- FIELD WIRING
- ?? DEVICE TERMINAL
- ??? FEED-THROUGH TERMINAL IN PANEL
- SHLD SHIELD TERMINAL IN PANEL
- ??? GROUND TERMINAL IN PANEL
- ?A ??? FUSE TERMINAL IN PANEL
- ?A ??? CIRCUIT BREAKER TERMINAL IN PANEL
- NC / CR??? C / NO RELAY TERMINAL IN PANEL

	REVISIONS	DATE	BY

DESIGNED J. VONDERAHE
DRAWN J. VONDERAHE
CHECKED J. MURPHY
APPROVED B. BUNKER

ONE INCH AT FULL SCALE. IF NOT, SCALE ACCORDINGLY

FILE NAME PS1598102-I101
JOB No. 216-1598-102
DATE FEBRUARY 2018

ARTHUR G. STOKES — STATE OF WASHINGTON — 34736 — REGISTERED PROFESSIONAL ENGINEER

FEBRUARY 23, 2018

Parametrix
ENGINEERING . PLANNING . ENVIRONMENTAL SCIENCES
1019 39TH AVENUE SE, SUITE 100 | PUYALLUP, WA 98374
P 253.604.6600
WWW.PARAMETRIX.COM

PROJECT NAME
THE CONSOLIDATED BOROUGH OF QUIL CEDA VILLAGE
MBR TREATMENT FACILITY UPGRADE
TULALIP, WASHINGTON

LCP-1000
PLC 1, RACK 1, SLOT 1 AND SLOT 2
DISCRETE INPUTS

DRAWING NO. 77 OF 157
I101

PATH: U:\PSO\Projects\Clients\1598-TulalipTribes\216-1598-102 MBR Upgrade\99Svcs\CADD\DWG
PLOTTED BY: vondejam DATE: Friday, February 23, 2018 9:07:12 AM
LAYOUT: I101

LCP-1000

FIELD	TERMINAL BLOCKS	PLC	FIELD	TERMINAL BLOCKS	PLC

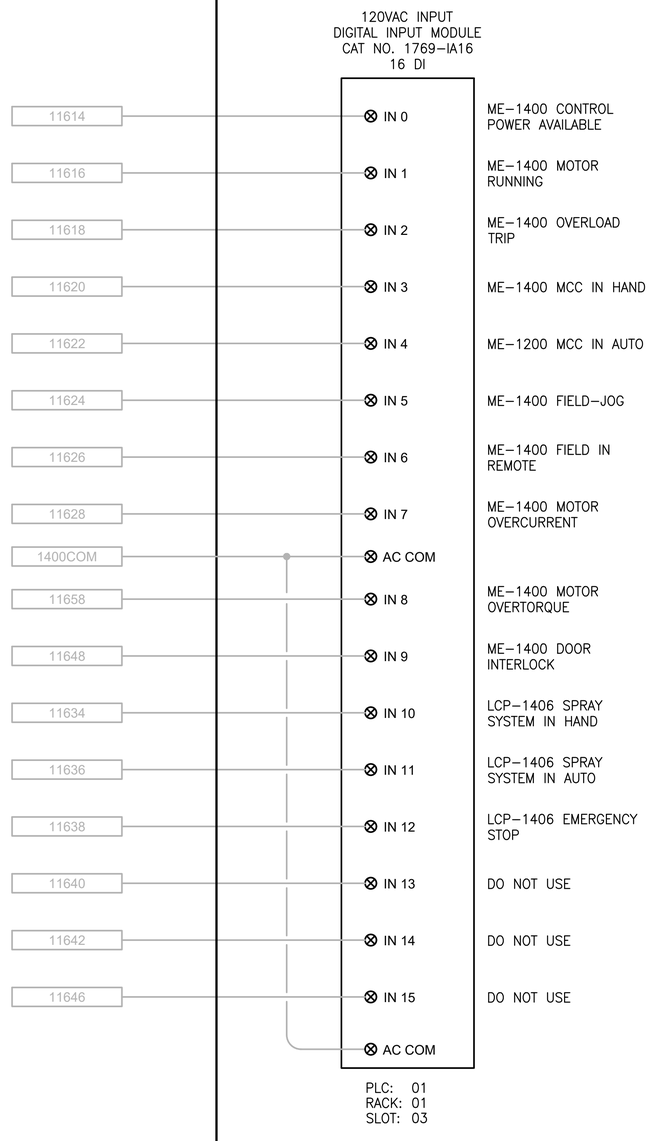

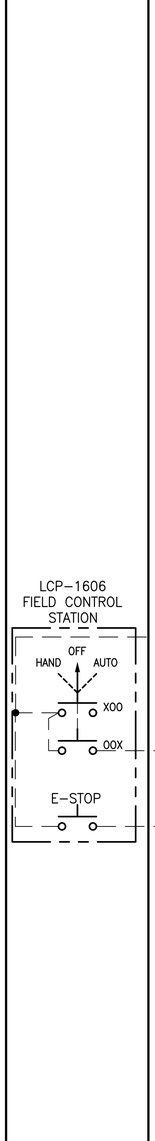

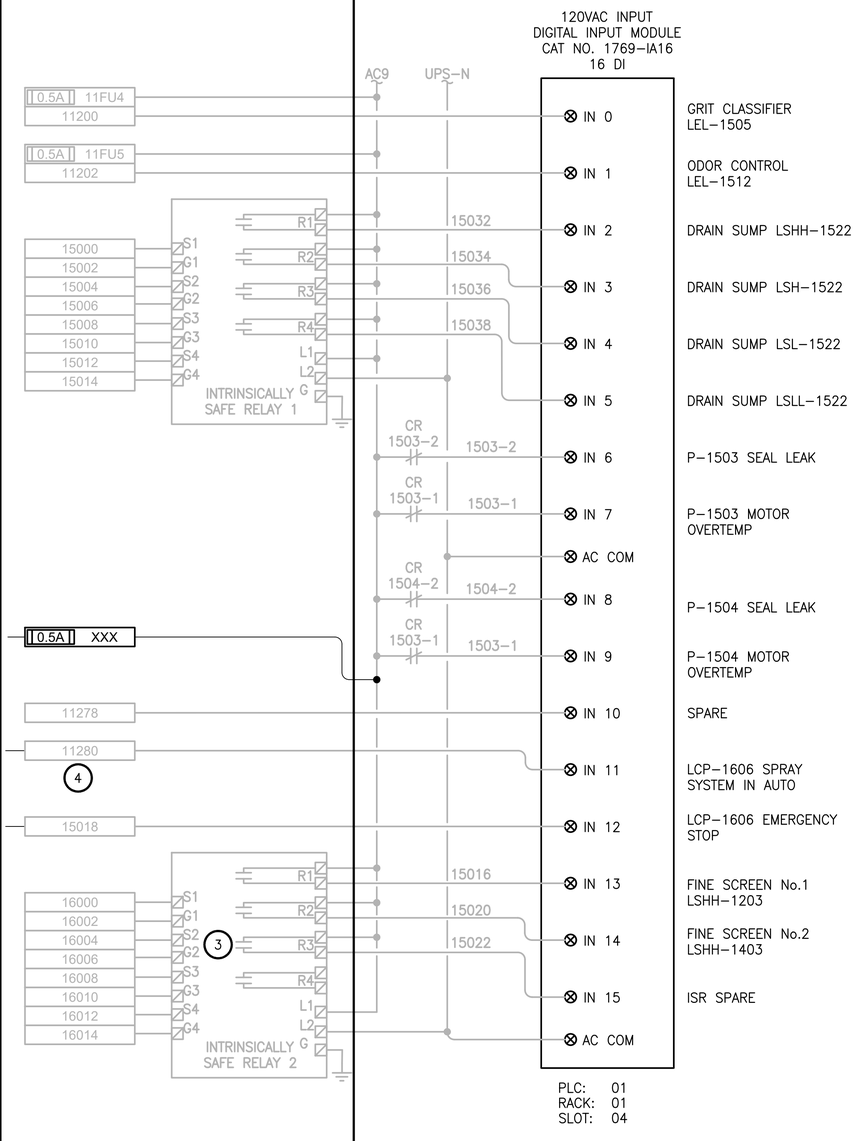

NOTES:

1. CONTRACTOR TO REPLACE EXISTING 1746–IA16 WITH NEW 1769–IA16
2. NOT ALL EXISTING TERMINAL BLOCKS, PANEL DEVICES, OR FIELD CONNECTIONS ARE SHOWN ON THE DRAWING.
3. CONTRACTOR TO DISCONNECT R4 IN INTRINSICALLY SAFE RELAY 2.
4. CONTRACTOR TO WIRE NEW LCP–1606 EMERGENCY STOP WITH EXISTING WIRE 15018 TO AN OPEN TERMINAL BLOCK (FIELD VERIFY) AND LABEL ACCORDINGLY.
5. EXISTING COMPONENT LABELING FROM TSI AS–BUILT DRAWINGS. CONTRACTOR IS RESPONSIBLE FOR FIELD–VERIFYING THIS INFORMATION.

PROJECT WORK SHOWN ON THIS DRAWING IS ALL INCLUDED IN SCHEDULE A

LEGEND:

- WIRING INTERNAL TO PANEL
- FIELD WIRING
- ?? DEVICE TERMINAL
- ??? FEED–THROUGH TERMINAL IN PANEL
- SHLD SHIELD TERMINAL IN PANEL
- ??? GROUND TERMINAL IN PANEL
- ?A ??? FUSE TERMINAL IN PANEL
- ?A ??? CIRCUIT BREAKER TERMINAL IN PANEL
- NC / CR??? C / NO RELAY TERMINAL IN PANEL

PATH: U:\PSO\Projects\Clients\1598–TulalipTribes\216–1598–102 MBR Upgrade\99Svcs\CADD\DWG
PLOTTED BY: vondejonn DATE: Wednesday, February 21, 2018 1:56:23 PM
LAYOUT: I102

	REVISIONS	DATE	BY

DESIGNED J. VONDERAHE
DRAWN J. VONDERAHE
CHECKED J. MURPHY
APPROVED B. BUNKER

ONE INCH AT FULL SCALE. IF NOT, SCALE ACCORDINGLY
FILE NAME PS1598102–I102
JOB No. 216–1598–102
DATE FEBRUARY 2018

ARTHUR G. STOKES — STATE OF WASHINGTON — 34736 — REGISTERED PROFESSIONAL ENGINEER
FEBRUARY 23, 2018

Parametrix
ENGINEERING . PLANNING . ENVIRONMENTAL SCIENCES
1019 39TH AVENUE SE, SUITE 100 | PUYALLUP, WA 98374
P 253.604.6600
WWW.PARAMETRIX.COM

PROJECT NAME
THE CONSOLIDATED BOROUGH OF QUIL CEDA VILLAGE
MBR TREATMENT FACILITY UPGRADE
TULALIP, WASHINGTON

LCP-1000
PLC 1, RACK 1, SLOT 3 AND SLOT 4
DISCRETE INPUTS

DRAWING NO. 78 OF 157
I102

LCP-1000

FIELD	TERMINAL BLOCKS	PLC

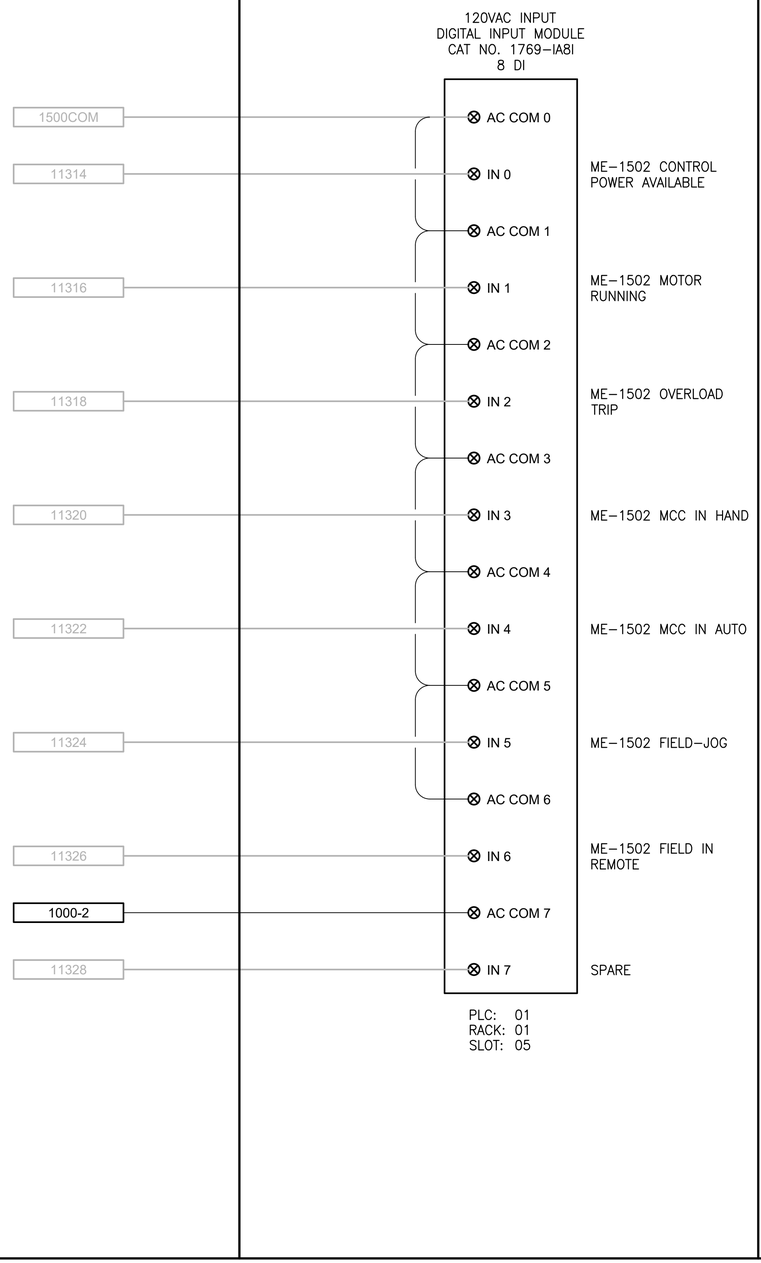

FIELD	TERMINAL BLOCKS	PLC

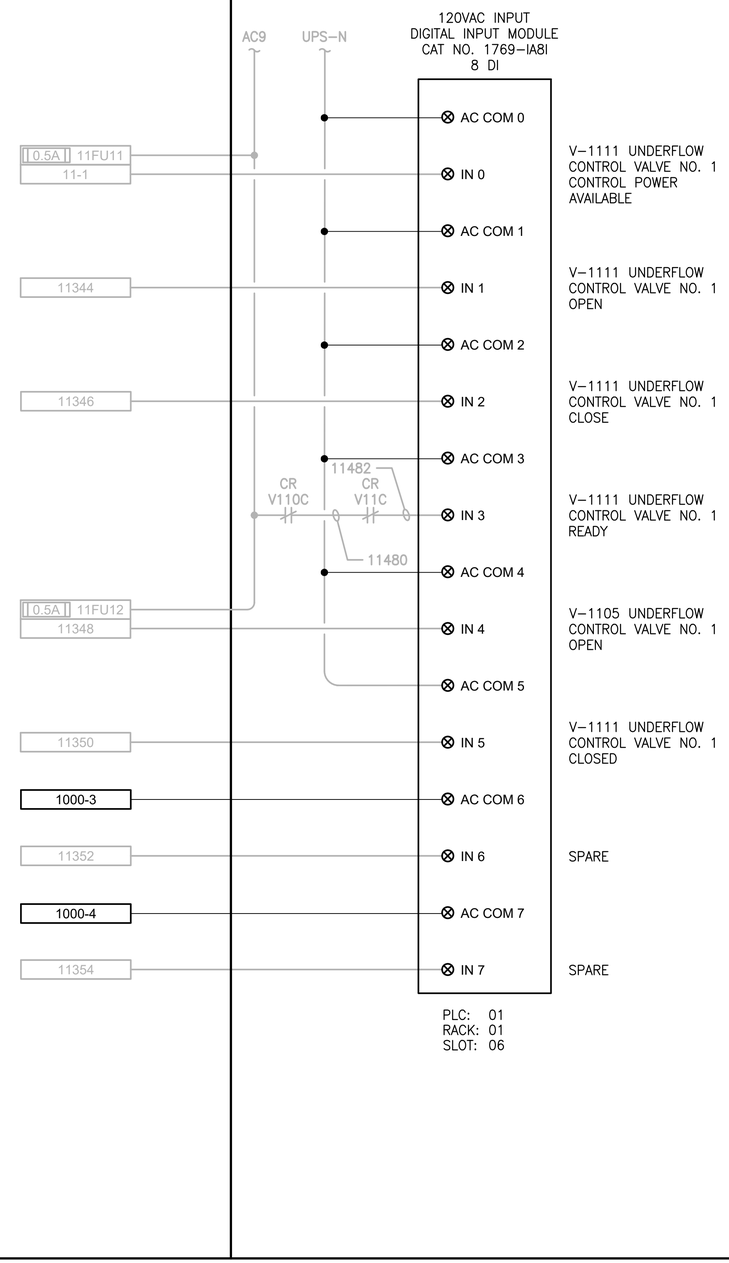

NOTES:

1. CONTRACTOR TO REPLACE EXISTING 1746–IA8 WITH NEW 1769–IA8I
2. NOT ALL EXISTING TERMINAL BLOCKS, PANEL DEVICES, OR FIELD CONNECTIONS ARE SHOWN ON THE DRAWING.
3. EXISTING COMPONENT LABELING FROM TSI AS–BUILT DRAWINGS. CONTRACTOR IS RESPONSIBLE FOR FIELD–VERIFYING THIS INFORMATION.

PROJECT WORK SHOWN ON THIS DRAWING IS ALL INCLUDED IN SCHEDULE A

LEGEND:

- WIRING INTERNAL TO PANEL
- FIELD WIRING
- ?? — DEVICE TERMINAL
- ??? — FEED–THROUGH TERMINAL IN PANEL
- SHLD — SHIELD TERMINAL IN PANEL
- ??? — GROUND TERMINAL IN PANEL
- ?A ??? — FUSE TERMINAL IN PANEL
- ?A ??? — CIRCUIT BREAKER TERMINAL IN PANEL
- NC / CR??? C / NO — RELAY TERMINAL IN PANEL

	REVISIONS	DATE	BY

DESIGNED J. VONDERAHE
DRAWN J. VONDERAHE
CHECKED J. MURPHY
APPROVED B. BUNKER

ONE INCH AT FULL SCALE. IF NOT, SCALE ACCORDINGLY

FILE NAME PS1598102–I103
JOB No. 216–1598–102
DATE FEBRUARY 2018

ARTHUR G. STOKES — STATE OF WASHINGTON — 34736 — REGISTERED PROFESSIONAL ENGINEER

FEBRUARY 23, 2018

Parametrix
ENGINEERING . PLANNING . ENVIRONMENTAL SCIENCES
1019 39TH AVENUE SE, SUITE 100 | PUYALLUP, WA 98374
P 253.604.6600
WWW.PARAMETRIX.COM

PROJECT NAME
THE CONSOLIDATED BOROUGH OF QUIL CEDA VILLAGE
MBR TREATMENT FACILITY UPGRADE
TULALIP, WASHINGTON

LCP-1000
PLC 1, RACK 1, SLOT 5 AND SLOT 6
DISCRETE INPUTS

DRAWING NO. 79 OF 157

I103

PATH: U:\PSO\Projects\Clients\1598–TulalipTribes\216–1598–102 MBR Upgrade\999vcs\CADD\DWG PLOTTED BY: vondejorn DATE: Wednesday, February 21, 2018 2:00:31 PM
LAYOUT: I103

LCP-1000

FIELD	TERMINAL BLOCKS	PLC	FIELD	TERMINAL BLOCKS	PLC

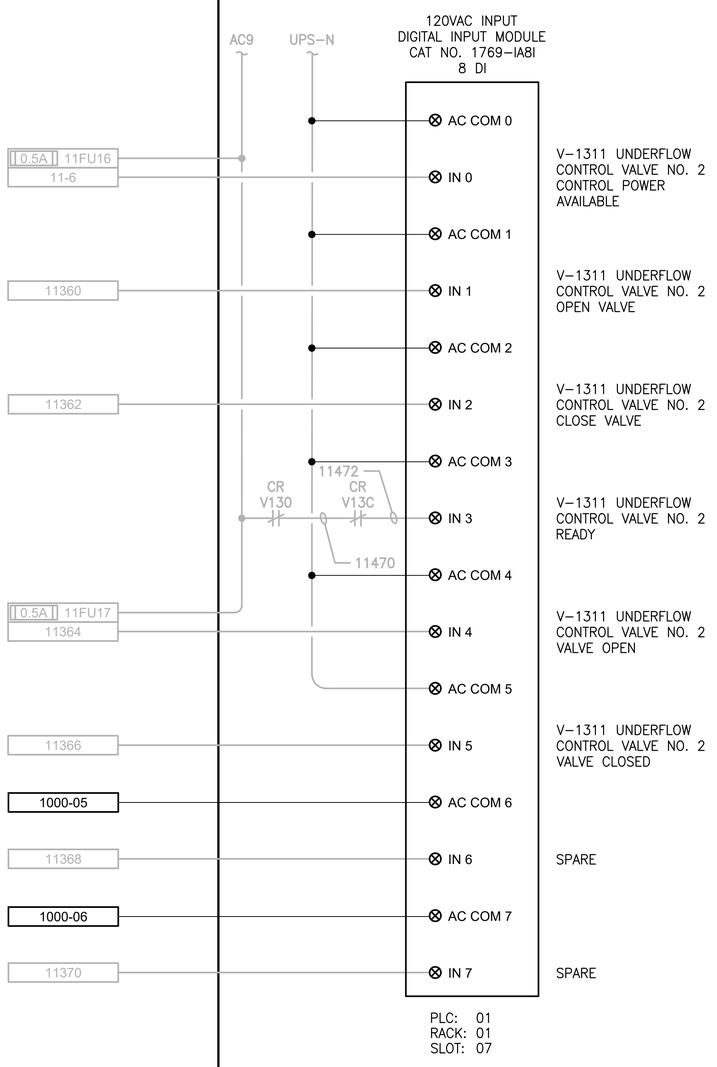

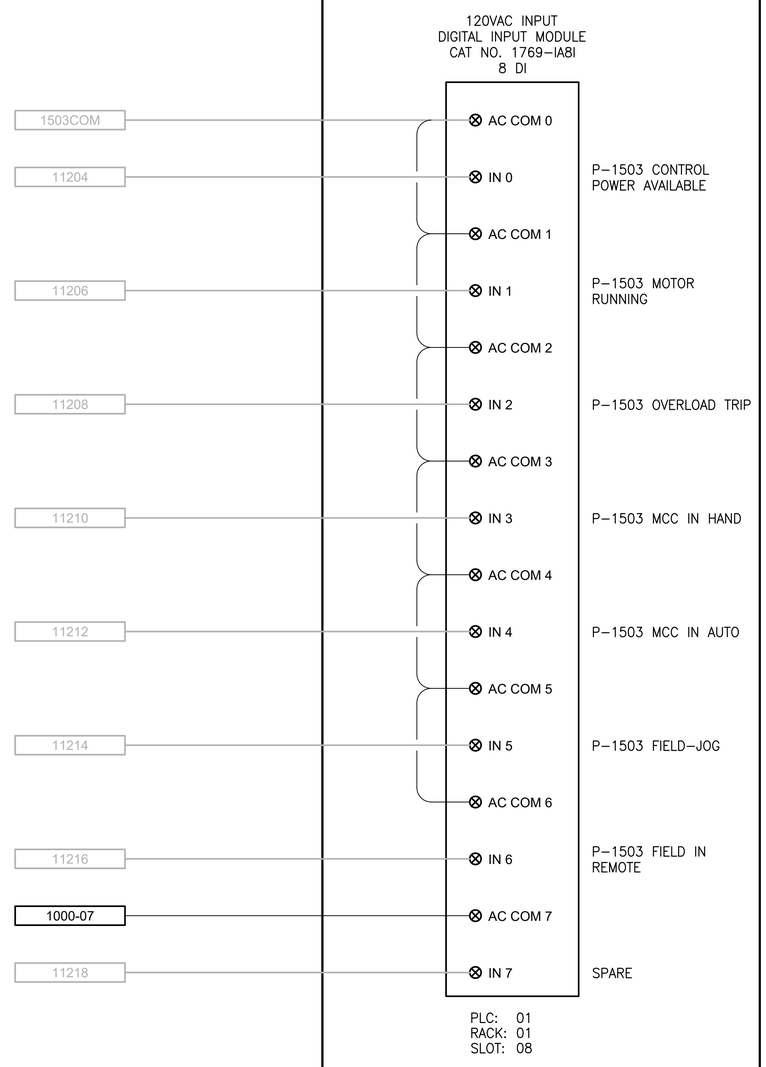

NOTES:

1. CONTRACTOR TO REPLACE EXISTING 1746-IA8 WITH NEW 1769-IA8I.
2. NOT ALL EXISTING TERMINAL BLOCKS, PANEL DEVICES, OR FIELD CONNECTIONS ARE SHOWN ON THE DRAWING.
3. EXISTING COMPONENT LABELING FROM TSI AS-BUILT DRAWINGS. CONTRACTOR IS RESPONSIBLE FOR FIELD-VERIFYING THIS INFORMATION.

PROJECT WORK SHOWN ON THIS DRAWING IS ALL INCLUDED IN SCHEDULE A

LEGEND:

- WIRING INTERNAL TO PANEL
- FIELD WIRING
- [??] DEVICE TERMINAL
- [???] FEED-THROUGH TERMINAL IN PANEL
- [SHLD] SHIELD TERMINAL IN PANEL
- [⏚ ???] GROUND TERMINAL IN PANEL
- [?A ???] FUSE TERMINAL IN PANEL
- [?A ↷ ???] CIRCUIT BREAKER TERMINAL IN PANEL
- NC / CR??? C / NO RELAY TERMINAL IN PANEL

REVISIONS	DATE	BY

DESIGNED J. VONDERAHE
DRAWN J. VONDERAHE
CHECKED J. MURPHY
APPROVED B. BUNKER

ONE INCH AT FULL SCALE. IF NOT, SCALE ACCORDINGLY

FILE NAME PS1598102-I104
JOB No. 216-1598-102
DATE FEBRUARY 2018

ARTHUR G. STOKE — STATE OF WASHINGTON — 34736 — REGISTERED PROFESSIONAL ENGINEER

FEBRUARY 23, 2018

Parametrix
ENGINEERING . PLANNING . ENVIRONMENTAL SCIENCES
1019 39TH AVENUE SE, SUITE 100 | PUYALLUP, WA 98374
P 253.604.6600
WWW.PARAMETRIX.COM

PROJECT NAME
THE CONSOLIDATED BOROUGH OF QUIL CEDA VILLAGE
MBR TREATMENT FACILITY UPGRADE
TULALIP, WASHINGTON

LCP-1000
PLC 1, RACK 1, SLOT 7 AND SLOT 8
DISCRETE INPUTS

DRAWING NO. 80 OF 157
I104

PATH: U:\PSO\Projects\Clients\1598-TulalipTribes\216-1598-102 MBR Upgrade\99Svcs\CADD\DWG PLOTTED BY: vonderjam DATE: Friday, February 23, 2018 9:14:00 AM
LAYOUT: I104

LCP-1000

FIELD	TERMINAL BLOCKS	PLC

120VAC INPUT
DIGITAL INPUT MODULE
CAT NO. 1769–IA8I
8 DI

TERMINAL BLOCKS	PLC	
1504COM	AC COM 0	
11246	IN 0	P–1504 CONTROL POWER AVAILABLE
	AC COM 1	
11248	IN 1	P–1504 MOTOR RUNNING
	AC COM 2	
11250	IN 2	P–1504 OVERLOAD TRIP
	AC COM 3	
11252	IN 3	P–1504 MCC IN HAND
	AC COM 4	
11254	IN 4	P–1504 MCC IN AUTO
	AC COM 5	
11256	IN 5	P–1504 FIELD–JOG
	AC COM 6	
11258	IN 6	P–1504 FIELD IN REMOTE
1000-08	AC COM 7	
11260	IN 7	SPARE

PLC: 01
RACK: 01
SLOT: 09

FIELD	TERMINAL BLOCKS	PLC

120VAC INPUT
DIGITAL INPUT MODULE
CAT NO. 1769–IA8I
8 DI

TERMINAL BLOCKS	PLC	
1510COM	AC COM 0	
11284	IN 0	ME–1511 CONTROL POWER AVAILABLE
	AC COM 1	
11286	IN 1	ME–1511 MOTOR RUNNING
	AC COM 2	
11288	IN 2	ME–1511 OVERLOAD TRIP
	AC COM 3	
11290	IN 3	ME–1511 MCC IN HAND
	AC COM 4	
11292	IN 4	ME–1511 MCC IN AUTO
	AC COM 5	
11294	IN 5	ME–1511 FIELD–JOG
	AC COM 6	
11296	IN 6	ME–1511 FIELD IN REMOTE
1000-09	AC COM 7	
11298	IN 7	SPARE

PLC: 01
RACK: 01
SLOT: 10

NOTES:

1. CONTRACTOR TO REPLACE EXISTING 1746–IA8 WITH NEW 1769–IA8I.
2. NOT ALL EXISTING TERMINAL BLOCKS, PANEL DEVICES, OR FIELD CONNECTIONS ARE SHOWN ON THE DRAWING.
3. EXISTING COMPONENT LABELING FROM TSI AS–BUILT DRAWINGS. CONTRACTOR IS RESPONSIBLE FOR FIELD–VERIFYING THIS INFORMATION.

PROJECT WORK SHOWN ON THIS DRAWING IS ALL INCLUDED IN SCHEDULE A

LEGEND:

- WIRING INTERNAL TO PANEL
- FIELD WIRING
- [??] DEVICE TERMINAL
- [???] FEED–THROUGH TERMINAL IN PANEL
- [SHLD] SHIELD TERMINAL IN PANEL
- ⏚ ??? GROUND TERMINAL IN PANEL
- [?A] ??? FUSE TERMINAL IN PANEL
- ?A ↷ ??? CIRCUIT BREAKER TERMINAL IN PANEL
- NC / CR??? C / NO RELAY TERMINAL IN PANEL

	REVISIONS	DATE	BY

DESIGNED J. VONDERAHE
DRAWN J. VONDERAHE
CHECKED J. MURPHY
APPROVED B. BUNKER

ONE INCH AT FULL SCALE.
IF NOT, SCALE ACCORDINGLY

FILE NAME PS1598102–I105
JOB No. 216–1598–102
DATE FEBRUARY 2018

ARTHUR G. STOLE — STATE OF WASHINGTON — 34736 — REGISTERED PROFESSIONAL ENGINEER

FEBRUARY 23, 2018

Parametrix
ENGINEERING , PLANNING , ENVIRONMENTAL SCIENCES
1019 39TH AVENUE SE, SUITE 100 | PUYALLUP, WA 98374
P 253.604.6600
WWW.PARAMETRIX.COM

PROJECT NAME
THE CONSOLIDATED BOROUGH OF QUIL CEDA VILLAGE
MBR TREATMENT FACILITY UPGRADE
TULALIP, WASHINGTON

LCP-1000
PLC 1, RACK 1, SLOT 9 AND SLOT 10
DISCRETE INPUTS

DRAWING NO.
81 OF 157

I105

PATH: U:\PSO\Projects\Clients\1598–TulalipTribes\216–1598–102 MBR Upgrade\99Svcs\CADD\DWG
PLOTTED BY: vonde|am DATE: Friday, February 23, 2018 9:18:23 AM
LAYOUT: I105

LCP-1000

FIELD	TERMINAL BLOCKS	PLC	FIELD	TERMINAL BLOCKS	PLC

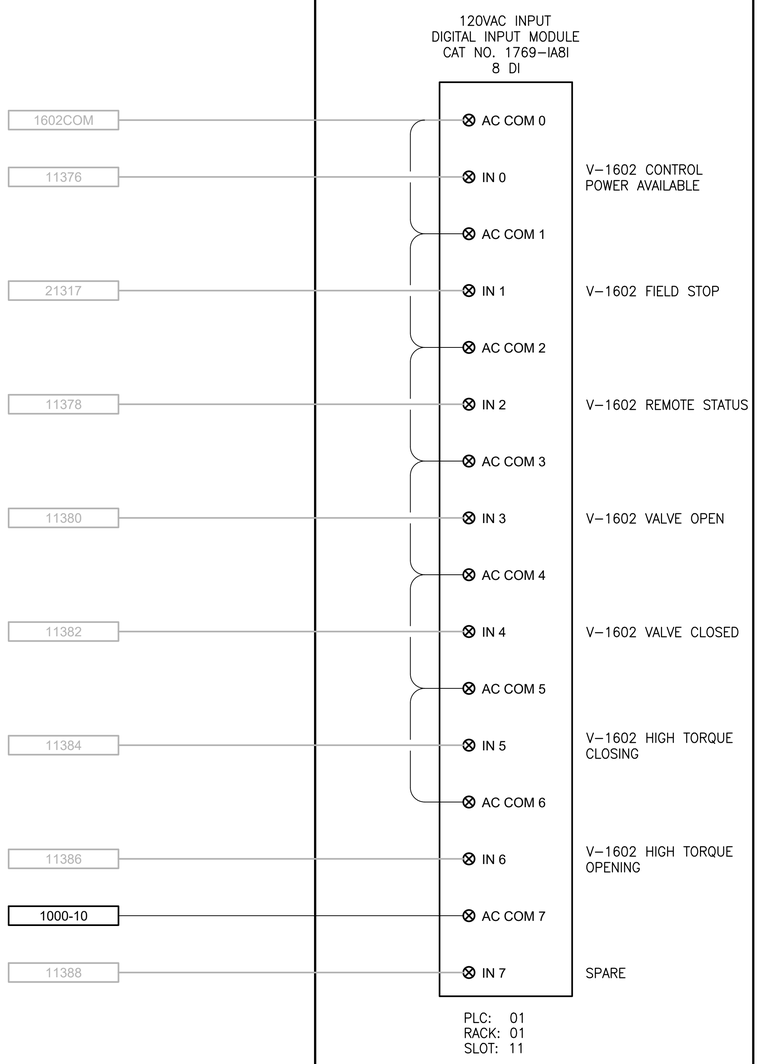

NOTES:

1. CONTRACTOR TO REPLACE EXISTING 1746–IA8 WITH NEW 1769–IA8I.
2. NOT ALL EXISTING TERMINAL BLOCKS, PANEL DEVICES, OR FIELD CONNECTIONS ARE SHOWN ON THE DRAWING.
3. EXISTING COMPONENT LABELING FROM TSI AS–BUILT DRAWINGS. CONTRACTOR IS RESPONSIBLE FOR FIELD–VERIFYING THIS INFORMATION.

PROJECT WORK SHOWN ON THIS DRAWING IS ALL INCLUDED IN SCHEDULE A

LEGEND:

- WIRING INTERNAL TO PANEL
- FIELD WIRING
- [??] DEVICE TERMINAL
- [???] FEED–THROUGH TERMINAL IN PANEL
- [SHLD] SHIELD TERMINAL IN PANEL
- [⏚ ???] GROUND TERMINAL IN PANEL
- [?A ???] FUSE TERMINAL IN PANEL
- [?A ↻ ???] CIRCUIT BREAKER TERMINAL IN PANEL
- NC / CR??? C / NO RELAY TERMINAL IN PANEL

REVISIONS	DATE	BY

DESIGNED J. VONDERAHE
DRAWN J. VONDERAHE
CHECKED J. MURPHY
APPROVED B. BUNKER

ONE INCH AT FULL SCALE. IF NOT, SCALE ACCORDINGLY

FILE NAME PS1598102–I106
JOB No. 216–1598–102
DATE FEBRUARY 2018

ARTHUR G. STOLE — STATE OF WASHINGTON — 34736 — REGISTERED PROFESSIONAL ENGINEER

FEBRUARY 23, 2018

Parametrix
ENGINEERING , PLANNING , ENVIRONMENTAL SCIENCES
1019 39TH AVENUE SE, SUITE 100 | PUYALLUP, WA 98374
P 253.604.6600
WWW.PARAMETRIX.COM

PROJECT NAME
THE CONSOLIDATED BOROUGH OF QUIL CEDA VILLAGE
MBR TREATMENT FACILITY UPGRADE
TULALIP, WASHINGTON

LCP-1000
PLC 1, RACK 1, SLOT 11
DISCRETE INPUTS

DRAWING NO. 82 OF 157

I106

PATH: U:\PSO\Projects\Clients\1598–TulalipTribes\216–1598–102 MBR Upgrade\99Svcs\CADD\DWG PLOTTED BY: vonde|am DATE: Friday, February 23, 2018 9:19:46 AM LAYOUT: I106

LCP-1000

FIELD	TERMINAL BLOCKS	PLC

120VAC INPUT
DIGITAL INPUT MODULE
CAT NO. 1769–IA8I
8 DI

TERMINAL BLOCKS	PLC	
1603COM	AC COM 0	
10026	IN 0	M–1603 CONTROL POWER AVAILABLE
	AC COM 1	
10028	IN 1	M–1603 MOTOR RUNNING
	AC COM 2	
10030	IN 2	M–1603 OVERLOAD TRIP
	AC COM 3	
10032	IN 3	M–1603 MCC IN HAND
	AC COM 4	
10034	IN 4	M–1603 MCC IN AUTO
	AC COM 5	
10036	IN 5	M–1603 FIELD–JOG
	AC COM 6	
10038	IN 6	M–1603 FIELD IN REMOTE
1000-11	AC COM 7	
10040	IN 7	SPARE

PLC: 01
RACK: 02
SLOT: 00

FIELD	TERMINAL BLOCKS	PLC

120VAC INPUT
DIGITAL INPUT MODULE
CAT NO. 1769–IA8I
8 DI

TERMINAL BLOCKS	PLC	
1702COM	AC COM 0	
11408	IN 0	V–1702 CONTROL POWER AVAILABLE
	AC COM 1	
21317	IN 1	V–1702 FIELD STOP
	AC COM 2	
11410	IN 2	V–1702 REMOTE STATUS
	AC COM 3	
11412	IN 3	V–1702 VALVE OPEN
	AC COM 4	
11414	IN 4	V–1702 VALVE CLOSED
	AC COM 5	
11416	IN 5	V–1702 HIGH TORQUE CLOSING
	AC COM 6	
11418	IN 6	V–1702 HIGH TORQUE OPENING
1000-12	AC COM 7	
11420	IN 7	SPARE

PLC: 01
RACK: 02
SLOT: 01

NOTES:

1. CONTRACTOR TO REPLACE EXISTING 1746–IA8 WITH NEW 1769–IA8I.
2. NOT ALL EXISTING TERMINAL BLOCKS, PANEL DEVICES, OR FIELD CONNECTIONS ARE SHOWN ON THE DRAWING.
3. EXISTING COMPONENT LABELING FROM TSI AS–BUILT DRAWINGS. CONTRACTOR IS RESPONSIBLE FOR FIELD–VERIFYING THIS INFORMATION.

PROJECT WORK SHOWN ON THIS DRAWING IS ALL INCLUDED IN SCHEDULE A

LEGEND:

- WIRING INTERNAL TO PANEL
- FIELD WIRING
- ?? — DEVICE TERMINAL
- ??? — FEED–THROUGH TERMINAL IN PANEL
- SHLD — SHIELD TERMINAL IN PANEL
- ??? — GROUND TERMINAL IN PANEL
- ?A ??? — FUSE TERMINAL IN PANEL
- ?A ??? — CIRCUIT BREAKER TERMINAL IN PANEL
- NC / CR??? C / NO — RELAY TERMINAL IN PANEL

REVISIONS	DATE	BY

DESIGNED J. VONDERAHE
DRAWN J. VONDERAHE
CHECKED J. MURPHY
APPROVED B. BUNKER

ONE INCH AT FULL SCALE.
IF NOT, SCALE ACCORDINGLY

FILE NAME PS1598102–I107
JOB No. 216–1598–102
DATE FEBRUARY 2018

ARTHUR G. STOLE — STATE OF WASHINGTON — 34736 — REGISTERED PROFESSIONAL ENGINEER

FEBRUARY 23, 2018

Parametrix
ENGINEERING , PLANNING , ENVIRONMENTAL SCIENCES
1019 39TH AVENUE SE, SUITE 100 | PUYALLUP, WA 98374
P 253.604.6600
WWW.PARAMETRIX.COM

PROJECT NAME
THE CONSOLIDATED BOROUGH OF QUIL CEDA VILLAGE
MBR TREATMENT FACILITY UPGRADE
TULALIP, WASHINGTON

LCP-1000
PLC 1, RACK 2, SLOT 0 AND SLOT 1
DISCRETE INPUTS

DRAWING NO.
83 OF 157

I107

PATH: U:\PSO\Projects\Clients\1598–TulalipTribes\216–1598–102 MBR Upgrade\99Svcs\CADD\DWG
PLOTTED BY: vonde|am DATE: Friday, February 23, 2018 9:21:20 AM
LAYOUT: I107

LCP-1000

FIELD	TERMINAL BLOCKS	PLC	FIELD	TERMINAL BLOCKS	PLC

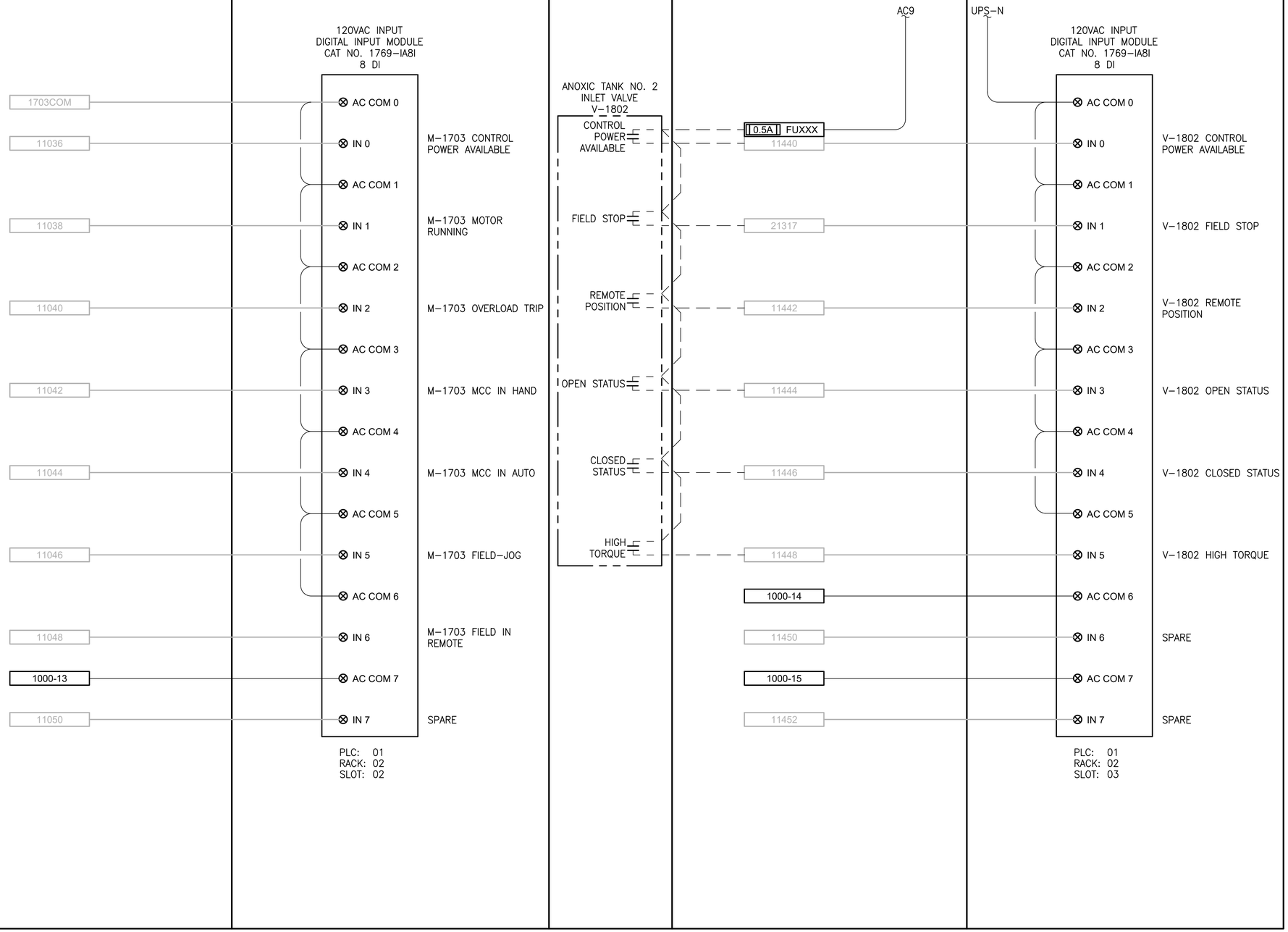

NOTES:

1. CONTRACTOR TO REPLACE EXISTING 1746–IA8 WITH NEW 1769–IA8I.
2. NOT ALL EXISTING TERMINAL BLOCKS, PANEL DEVICES, OR FIELD CONNECTIONS ARE SHOWN ON THE DRAWING.
3. EXISTING COMPONENT LABELING FROM TSI AS–BUILT DRAWINGS. CONTRACTOR IS RESPONSIBLE FOR FIELD–VERIFYING THIS INFORMATION.

PROJECT WORK SHOWN ON THIS DRAWING IS ALL INCLUDED IN SCHEDULE A

LEGEND:

- WIRING INTERNAL TO PANEL
- FIELD WIRING
- ?? — DEVICE TERMINAL
- ??? — FEED–THROUGH TERMINAL IN PANEL
- SHLD — SHIELD TERMINAL IN PANEL
- ??? — GROUND TERMINAL IN PANEL
- ?A ??? — FUSE TERMINAL IN PANEL
- ?A ??? — CIRCUIT BREAKER TERMINAL IN PANEL
- NC / CR??? C / NO — RELAY TERMINAL IN PANEL

	REVISIONS	DATE	BY

DESIGNED J. VONDERAHE
DRAWN J. VONDERAHE
CHECKED J. MURPHY
APPROVED B. BUNKER

ONE INCH AT FULL SCALE. IF NOT, SCALE ACCORDINGLY

FILE NAME PS1598102–I108
JOB No. 216–1598–102
DATE FEBRUARY 2018

ARTHUR G. STOKES — STATE OF WASHINGTON — 34736 — REGISTERED PROFESSIONAL ENGINEER

FEBRUARY 23, 2018

Parametrix
ENGINEERING . PLANNING . ENVIRONMENTAL SCIENCES
1019 39TH AVENUE SE, SUITE 100 | PUYALLUP, WA 98374
P 253.604.6600
WWW.PARAMETRIX.COM

PROJECT NAME
THE CONSOLIDATED BOROUGH OF QUIL CEDA VILLAGE
MBR TREATMENT FACILITY UPGRADE
TULALIP, WASHINGTON

LCP-1000
PLC 1, RACK 2, SLOT 2 AND SLOT 3
DISCRETE INPUTS

DRAWING NO.
84 OF 157

I108

PATH: U:\PSO\Projects\Clients\1598–TulalipTribes\216–1598–102 MBR Upgrade\99Svcs\CADD\DWG PLOTTED BY: vonderjorn DATE: Friday, February 23, 2018 9:24:13 AM
LAYOUT: I108

LCP-1000

FIELD	TERMINAL BLOCKS	PLC	FIELD	TERMINAL BLOCKS	PLC

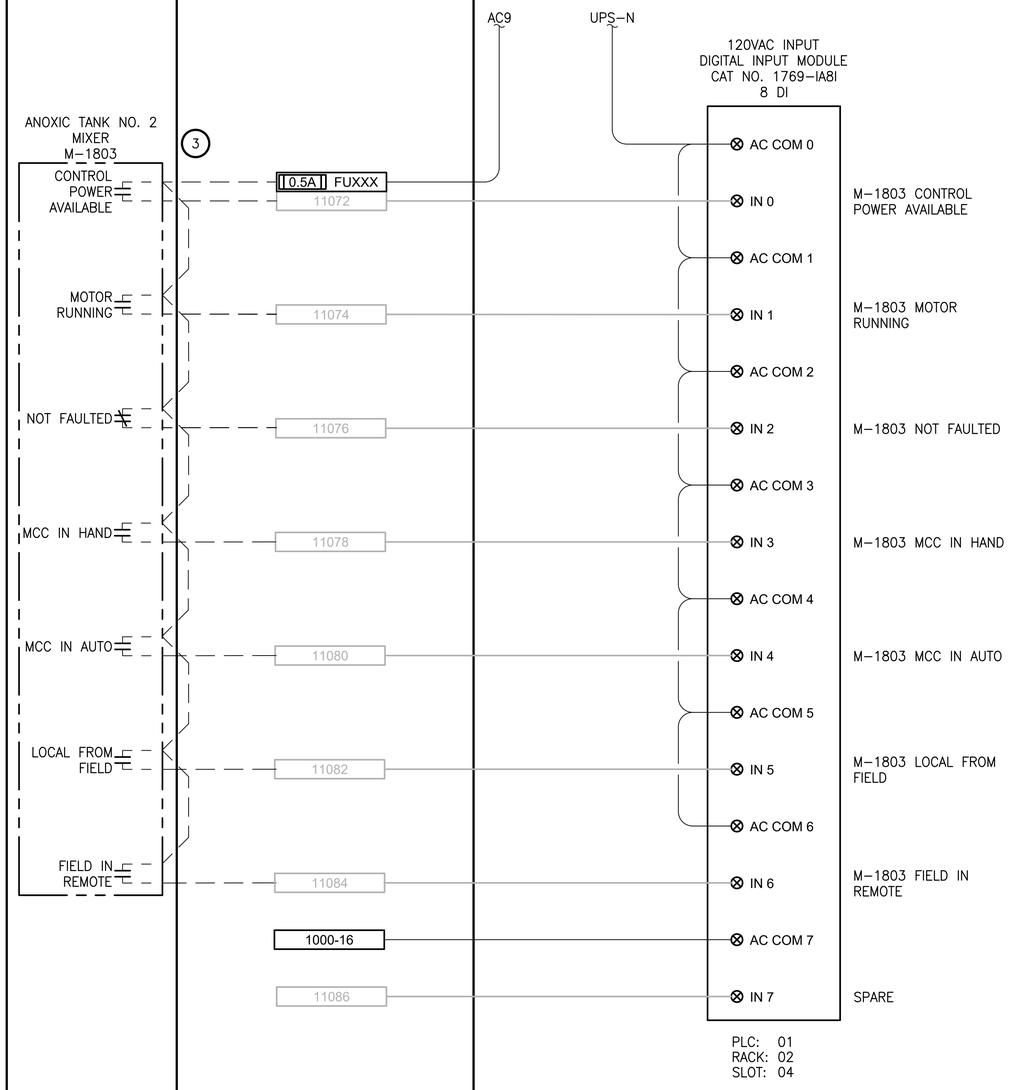

NOTES:

1. CONTRACTOR TO REPLACE EXISTING 1746–IA8 WITH NEW 1769–IA8I.
2. NOT ALL EXISTING TERMINAL BLOCKS, PANEL DEVICES, OR FIELD CONNECTIONS ARE SHOWN ON THE DRAWING.
3. (3) REFER TO SHEET E9 FOR MOTOR ELEMENTARY DIAGRAM.
4. EXISTING COMPONENT LABELING FROM TSI AS–BUILT DRAWINGS. CONTRACTOR IS RESPONSIBLE FOR FIELD–VERIFYING THIS INFORMATION.

PROJECT WORK SHOWN ON THIS DRAWING IS ALL INCLUDED IN SCHEDULE A

LEGEND:

- WIRING INTERNAL TO PANEL
- FIELD WIRING
- ?? — DEVICE TERMINAL
- ??? — FEED–THROUGH TERMINAL IN PANEL
- SHLD — SHIELD TERMINAL IN PANEL
- ??? — GROUND TERMINAL IN PANEL
- ?A ??? — FUSE TERMINAL IN PANEL
- ?A ??? — CIRCUIT BREAKER TERMINAL IN PANEL
- NC / CR??? C / NO — RELAY TERMINAL IN PANEL

REVISIONS	DATE	BY

DESIGNED J. VONDERAHE
DRAWN J. VONDERAHE
CHECKED J. MURPHY
APPROVED B. BUNKER

ONE INCH AT FULL SCALE.
IF NOT, SCALE ACCORDINGLY

FILE NAME PS1598102–I109
JOB No. 216–1598–102
DATE FEBRUARY 2018

ARTHUR G. STOLE — STATE OF WASHINGTON — 34736 — REGISTERED PROFESSIONAL ENGINEER

FEBRUARY 23, 2018

Parametrix
ENGINEERING , PLANNING , ENVIRONMENTAL SCIENCES
1019 39TH AVENUE SE, SUITE 100 | PUYALLUP, WA 98374
P 253.604.6600
WWW.PARAMETRIX.COM

PROJECT NAME
THE CONSOLIDATED BOROUGH OF QUIL CEDA VILLAGE
MBR TREATMENT FACILITY UPGRADE
TULALIP, WASHINGTON

LCP-1000
PLC 1, RACK 2, SLOT 4
DISCRETE INPUTS

DRAWING NO.
85 OF 157

I109

PATH: U:\PSO\Projects\Clients\1598–TulalipTribes\216–1598–102 MBR Upgrade\99Svcs\CADD\DWG
PLOTTED BY: vonde|am DATE: Friday, February 23, 2018 9:25:57 AM
LAYOUT: I109

LCP-1000

PLC

RELAY OUTPUT MODULE
CAT NO. 1769–OW8I
8 DO

AC9

V–1111 CALL VALVE OPEN	VAC/VDC 0	
	OUT 0	11484
V–1111 CALL VALVE CLOSED	VAC/VDC 1	
	OUT 1	11486
SV–1103 VALVE CALL OPEN	VAC/VDC 2	
	OUT 2	11488
ME–1600 SCREEN RUN COMMAND	VAC/VDC 3	11356
	OUT 3	11358
V–1311 CALL VALVE OPEN	VAC/VDC 4	
	OUT 4	11474
V–1311 CALL VALVE CLOSED	VAC/VDC 5	
	OUT 5	11476
SV–1303 VALVE CALL OPEN	VAC/VDC 6	
	OUT 6	11478
SPARE	VAC/VDC 7	11372
	OUT 7	11374

PLC: 01
RACK: 02
SLOT: 05

TERMINAL BLOCKS

UPS–N

CR V11O
CR V11C
CR S11
CR V13O
CR V13C
CR S11

FIELD

HEADWORKS FINE SCREEN NO. 3 MCC LCP–1606
XX
XX

PLC

RELAY OUTPUT MODULE
CAT NO. 1769–OW8I
8 DO

ME–1204 READY	VAC/VDC 0	11150
	OUT 0	11152
ME–1204 JOG CALL	VAC/VDC 1	
	OUT 1	11154
ME–1204 AUTO CALL	VAC/VDC 2	11156
	OUT 2	
ME–1204 RESET–PLC	VAC/VDC 3	
	OUT 3	11158
SV–1202 OPEN	VAC/VDC 4	
	OUT 4	11160
SPARE	VAC/VDC 5	11162
	OUT 5	11164
SPARE	VAC/VDC 6	11166
	OUT 6	11168
SPARE	VAC/VDC 7	11370
	OUT 7	11372

PLC: 01
RACK: 02
SLOT: 06

TERMINAL BLOCKS

SPR CR 1202
1200COM

FIELD

NOTES:

1. CONTRACTOR TO REPLACE EXISTING 1746–IA8 WITH NEW 1769–OW8I.
2. NOT ALL EXISTING TERMINAL BLOCKS, PANEL DEVICES, OR FIELD CONNECTIONS ARE SHOWN ON THE DRAWING.
3. EXISTING COMPONENT LABELING FROM TSI AS–BUILT DRAWINGS. CONTRACTOR IS RESPONSIBLE FOR FIELD–VERIFYING THIS INFORMATION.

PROJECT WORK SHOWN ON THIS DRAWING IS ALL INCLUDED IN SCHEDULE A

LEGEND:

- WIRING INTERNAL TO PANEL
- FIELD WIRING
- [??] DEVICE TERMINAL
- [???] FEED–THROUGH TERMINAL IN PANEL
- [SHLD] SHIELD TERMINAL IN PANEL
- [⏚ ???] GROUND TERMINAL IN PANEL
- [?A ???] FUSE TERMINAL IN PANEL
- [?A ↻ ???] CIRCUIT BREAKER TERMINAL IN PANEL
- NC / CR??? C / NO RELAY TERMINAL IN PANEL

PATH: U:\PSO\Projects\Clients\1598–TulalipTribes\216–1598–102 MBR Upgrade\99Svcs\CADD\LOWG
PLOTTED BY: vondejam DATE: Friday, February 23, 2018 9:26:35 AM
LAYOUT: I110

REVISIONS	DATE	BY

DESIGNED J. VONDERAHE
DRAWN J. VONDERAHE
CHECKED J. MURPHY
APPROVED B. BUNKER

ONE INCH AT FULL SCALE.
IF NOT, SCALE ACCORDINGLY
FILE NAME PS1598102–I110
JOB No. 216–1598–102
DATE FEBRUARY 2018

ARTHUR G. STOLE — STATE OF WASHINGTON — 34736 — REGISTERED PROFESSIONAL ENGINEER
FEBRUARY 23, 2018

Parametrix
ENGINEERING . PLANNING . ENVIRONMENTAL SCIENCES
1019 39TH AVENUE SE, SUITE 100 | PUYALLUP, WA 98374
P 253.604.6600
WWW.PARAMETRIX.COM

PROJECT NAME
THE CONSOLIDATED BOROUGH OF QUIL CEDA VILLAGE
MBR TREATMENT FACILITY UPGRADE
TULALIP, WASHINGTON

LCP-1000
PLC 1, RACK 2, SLOT 5 AND SLOT 6
DISCRETE OUTPUTS

DRAWING NO.
86 OF 157

I110

LCP-1000

PLC	TERMINAL BLOCKS	FIELD

RELAY OUTPUT MODULE
CAT NO. 1769–OW8I
8 DO

ME–1400 READY	VAC/VDC 0	11650	
	OUT 0	11652	
ME–1400 JOG CALL	VAC/VDC 1		
	OUT 1	11654	
ME–1400 AUTO CALL	VAC/VDC 2	11656	
	OUT 2		
ME–1400 RESET–PLC	VAC/VDC 3		
	OUT 3	11658	
SV–1402 OPEN	VAC/VDC 4		
	OUT 4	11660	SPR CR 1402 → 1400COM
SPARE	VAC/VDC 5	11662	
	OUT 5	11664	
ME–1502 READY	VAC/VDC 6	11330	
	OUT 6	11332	
ME–1502 AUTO CALL	VAC/VDC 7	11334	
	OUT 7	11336	

PLC: 01
RACK: 02
SLOT: 07

TO PLC 01, RACK 02, SLOT 08

PLC	TERMINAL BLOCKS	FIELD

RELAY OUTPUT MODULE
CAT NO. 1769–OW8I
8 DO

FROM PLC 01, RACK 02, SLOT 07

ME–1502 ALARM	VAC/VDC 0		
	OUT 0	11338	
SPARE	VAC/VDC 1	11340	
	OUT 1	11342	
ME–1503 READY	VAC/VDC 2	11220	
	OUT 2	11222	
ME–1503 JOG CALL	VAC/VDC 3		
	OUT 3	11224	
ME–1503 AUTO CALL	VAC/VDC 4	11226	
	OUT 4		
V–1802 VALVE STOP	VAC/VDC 5	11454	ANOXIC TANK NO. 2 INLET VALVE V–1802 XX
	OUT 5	11456	XX
V–1802 VALVE OPEN	VAC/VDC 6	11458	XX
	OUT 6	11460	XX
V–1802 VALVE CLOSE	VAC/VDC 7		
	OUT 7	11462	XX

PLC: 01
RACK: 02
SLOT: 08

NOTES:

1. CONTRACTOR TO REPLACE EXISTING 1746–IA8 WITH NEW 1769–OW8I.
2. NOT ALL EXISTING TERMINAL BLOCKS, PANEL DEVICES, OR FIELD CONNECTIONS ARE SHOWN ON THE DRAWING.
3. EXISTING COMPONENT LABELING FROM TSI AS–BUILT DRAWINGS. CONTRACTOR IS RESPONSIBLE FOR FIELD–VERIFYING THIS INFORMATION.

PROJECT WORK SHOWN ON THIS DRAWING IS ALL INCLUDED IN SCHEDULE A

LEGEND:

- WIRING INTERNAL TO PANEL
- FIELD WIRING
- [??] DEVICE TERMINAL
- [???] FEED–THROUGH TERMINAL IN PANEL
- [SHLD] SHIELD TERMINAL IN PANEL
- [⏚ ???] GROUND TERMINAL IN PANEL
- [?A ???] FUSE TERMINAL IN PANEL
- [?A ↷ ???] CIRCUIT BREAKER TERMINAL IN PANEL
- NC / CR??? C / NO RELAY TERMINAL IN PANEL

REVISIONS	DATE	BY

DESIGNED J. VONDERAHE
DRAWN J. VONDERAHE
CHECKED J. MURPHY
APPROVED B. BUNKER

ONE INCH AT FULL SCALE.
IF NOT, SCALE ACCORDINGLY

FILE NAME PS1598102–I111
JOB No. 216–1598–102
DATE FEBRUARY 2018

ARTHUR G. STOKES — STATE OF WASHINGTON — 34736 — REGISTERED PROFESSIONAL ENGINEER

FEBRUARY 23, 2018

Parametrix
ENGINEERING . PLANNING . ENVIRONMENTAL SCIENCES
1019 39TH AVENUE SE, SUITE 100 | PUYALLUP, WA 98374
P 253.604.6600
WWW.PARAMETRIX.COM

PROJECT NAME
THE CONSOLIDATED BOROUGH OF QUIL CEDA VILLAGE
MBR TREATMENT FACILITY UPGRADE
TULALIP, WASHINGTON

LCP-1000
PLC 1, RACK 2, SLOT 7 AND SLOT 8
DISCRETE OUTPUTS

DRAWING NO.
87 OF 157

I111

PATH: U:\PSO\Projects\Clients\1598–TulalipTribes\216–1598–102 MBR Upgrade\99Svcs\CADD\DWG
LAYOUT: I111
PLOTTED BY: vondejam
DATE: Friday, February 23, 2018 9:27:18 AM

LCP-1000

PLC	TERMINAL BLOCKS	FIELD

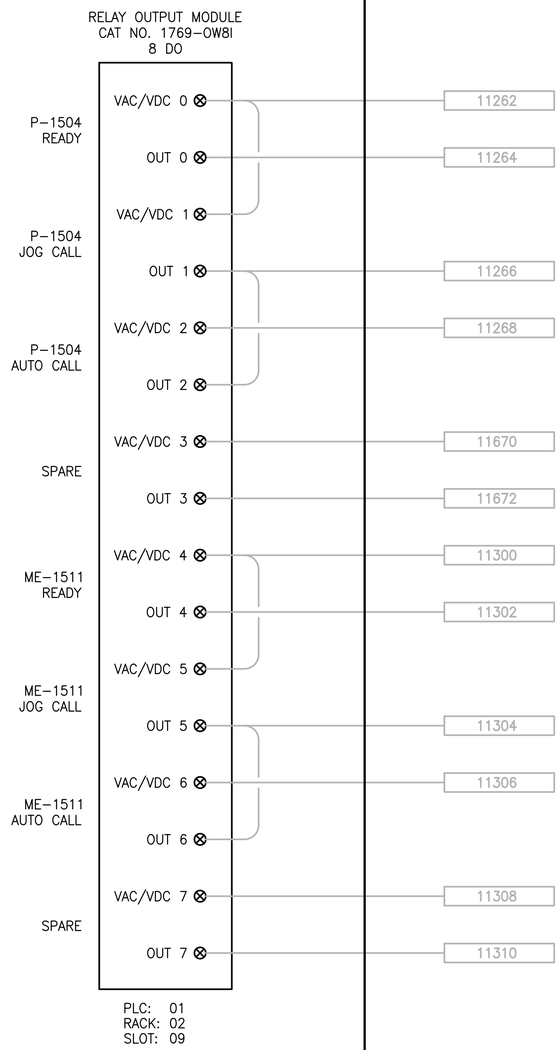

PLC	TERMINAL BLOCKS	FIELD

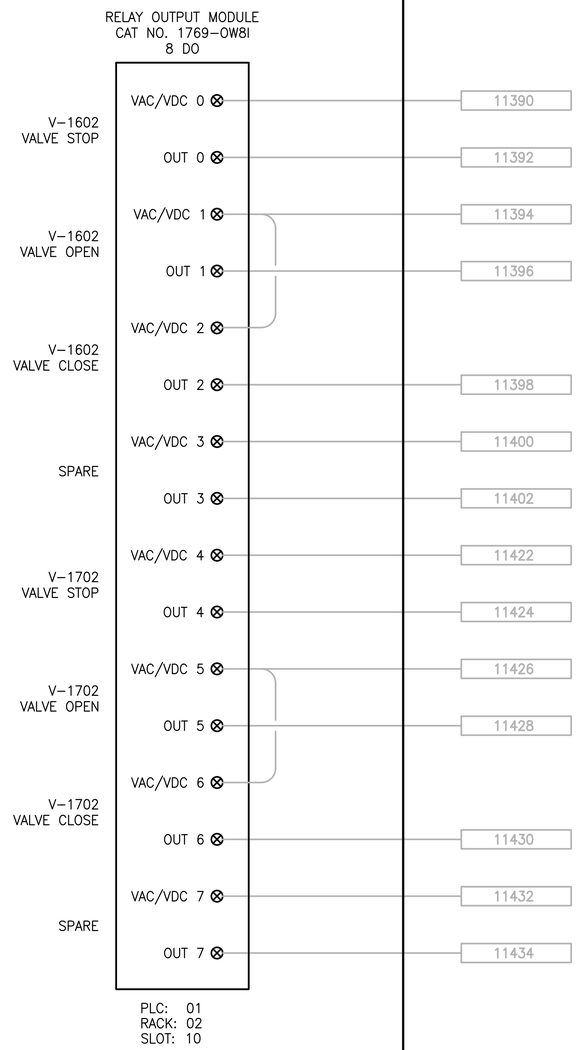

NOTES:

1. CONTRACTOR TO REPLACE EXISTING 1746-IA8 WITH NEW 1769-IA8I.
2. NOT ALL EXISTING TERMINAL BLOCKS, PANEL DEVICES, OR FIELD CONNECTIONS ARE SHOWN ON THE DRAWING.
3. EXISTING COMPONENT LABELING FROM TSI AS-BUILT DRAWINGS. CONTRACTOR IS RESPONSIBLE FOR FIELD-VERIFYING THIS INFORMATION.

PROJECT WORK SHOWN ON THIS DRAWING IS ALL INCLUDED IN SCHEDULE A

LEGEND:

- WIRING INTERNAL TO PANEL
- FIELD WIRING
- [??] DEVICE TERMINAL
- [???] FEED-THROUGH TERMINAL IN PANEL
- [SHLD] SHIELD TERMINAL IN PANEL
- [⏚ ???] GROUND TERMINAL IN PANEL
- [?A ???] FUSE TERMINAL IN PANEL
- [?A ↷ ???] CIRCUIT BREAKER TERMINAL IN PANEL
- RELAY TERMINAL IN PANEL (NC / CR??? C / NO)

	REVISIONS	DATE	BY

DESIGNED J. VONDERAHE
DRAWN J. VONDERAHE
CHECKED J. MURPHY
APPROVED B. BUNKER

ONE INCH AT FULL SCALE. IF NOT, SCALE ACCORDINGLY

FILE NAME PS1598102-I112
JOB No. 216-1598-102
DATE FEBRUARY 2018

ARTHUR G. STOKES — STATE OF WASHINGTON — 34736 — REGISTERED PROFESSIONAL ENGINEER

FEBRUARY 23, 2018

Parametrix
ENGINEERING . PLANNING . ENVIRONMENTAL SCIENCES
1019 39TH AVENUE SE, SUITE 100 | PUYALLUP, WA 98374
P 253.604.6600
WWW.PARAMETRIX.COM

PROJECT NAME
THE CONSOLIDATED BOROUGH OF QUIL CEDA VILLAGE
MBR TREATMENT FACILITY UPGRADE
TULALIP, WASHINGTON

LCP-1000
PLC 1, RACK 2, SLOT 9 AND SLOT 10
DISCRETE OUTPUTS

DRAWING NO.
88 OF 157

I112

PATH: U:\PSO\Projects\Clients\1598-TulalipTribes\216-1598-102 MBR Upgrade\99Svcs\CAD0\DWG PLOTTED BY: vondejam DATE: Wednesday, February 21, 2018 2:15:59 PM
LAYOUT: I112

LCP-1000

PLC	TERMINAL BLOCKS	FIELD

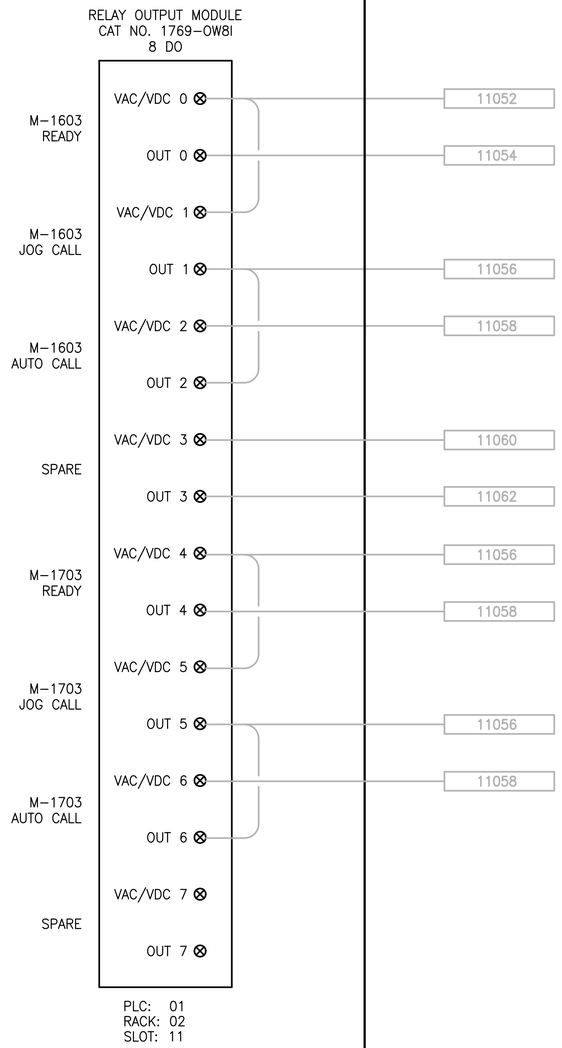

PLC	TERMINAL BLOCKS	FIELD

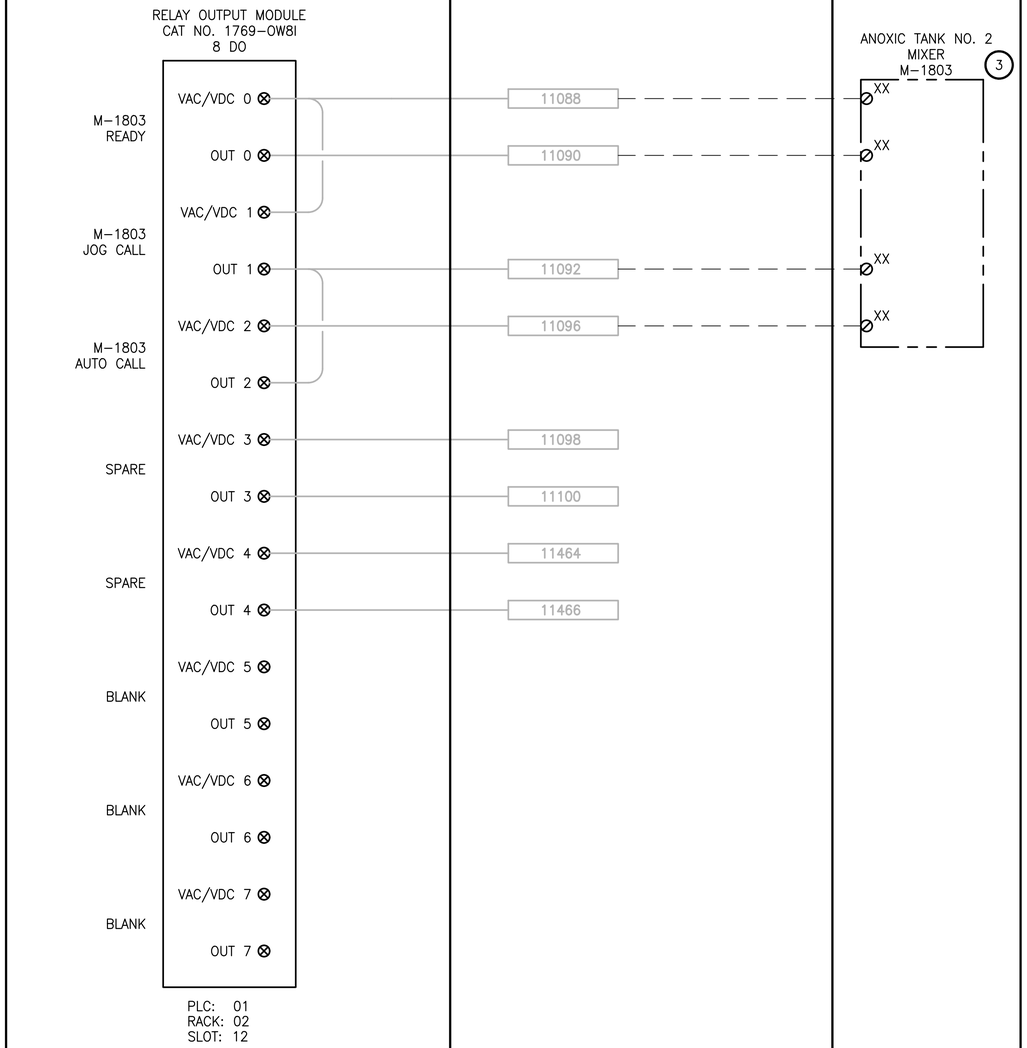

NOTES:

1. CONTRACTOR TO REPLACE EXISTING 1746-IA8 WITH NEW 1769-IA8I.
2. NOT ALL EXISTING TERMINAL BLOCKS, PANEL DEVICES, OR FIELD CONNECTIONS ARE SHOWN ON THE DRAWING.
3. REFER TO SHEET E9 FOR MOTOR ELEMENTARY DIAGRAM.
4. EXISTING COMPONENT LABELING FROM TSI AS-BUILT DRAWINGS. CONTRACTOR IS RESPONSIBLE FOR FIELD-VERIFYING THIS INFORMATION.

PROJECT WORK SHOWN ON THIS DRAWING IS ALL INCLUDED IN SCHEDULE A

LEGEND:

- WIRING INTERNAL TO PANEL
- FIELD WIRING
- ?? DEVICE TERMINAL
- ??? FEED-THROUGH TERMINAL IN PANEL
- SHLD SHIELD TERMINAL IN PANEL
- ??? GROUND TERMINAL IN PANEL
- ?A ??? FUSE TERMINAL IN PANEL
- ?A ??? CIRCUIT BREAKER TERMINAL IN PANEL
- NC / CR??? C / NO RELAY TERMINAL IN PANEL

	REVISIONS	DATE	BY

DESIGNED J. VONDERAHE
DRAWN J. VONDERAHE
CHECKED J. MURPHY
APPROVED B. BUNKER

ONE INCH AT FULL SCALE. IF NOT, SCALE ACCORDINGLY

FILE NAME PS1598102-I113
JOB No. 216-1598-102
DATE FEBRUARY 2018

ARTHUR G. STOKES — STATE OF WASHINGTON — 34736 — REGISTERED PROFESSIONAL ENGINEER

FEBRUARY 23, 2018

Parametrix
ENGINEERING . PLANNING . ENVIRONMENTAL SCIENCES
1019 39TH AVENUE SE, SUITE 100 | PUYALLUP, WA 98374
P 253.604.6600
WWW.PARAMETRIX.COM

PROJECT NAME
THE CONSOLIDATED BOROUGH OF QUIL CEDA VILLAGE
MBR TREATMENT FACILITY UPGRADE
TULALIP, WASHINGTON

LCP-1000
PLC 1, RACK 2, SLOT 11 AND SLOT 12
DISCRETE OUTPUTS

DRAWING NO. 89 OF 157

I113

PATH: U:\PSO\Projects\Clients\1598-TulalipTribes\216-1598-102 MBR Upgrade\99Svcs\CAD0\DWG PLOTTED BY: vondejam DATE: Wednesday, February 21, 2018 2:20:53 PM
LAYOUT: I113

LCP-1000

PLC	TERMINAL BLOCKS	FIELD	PLC	TERMINAL BLOCKS	FIELD

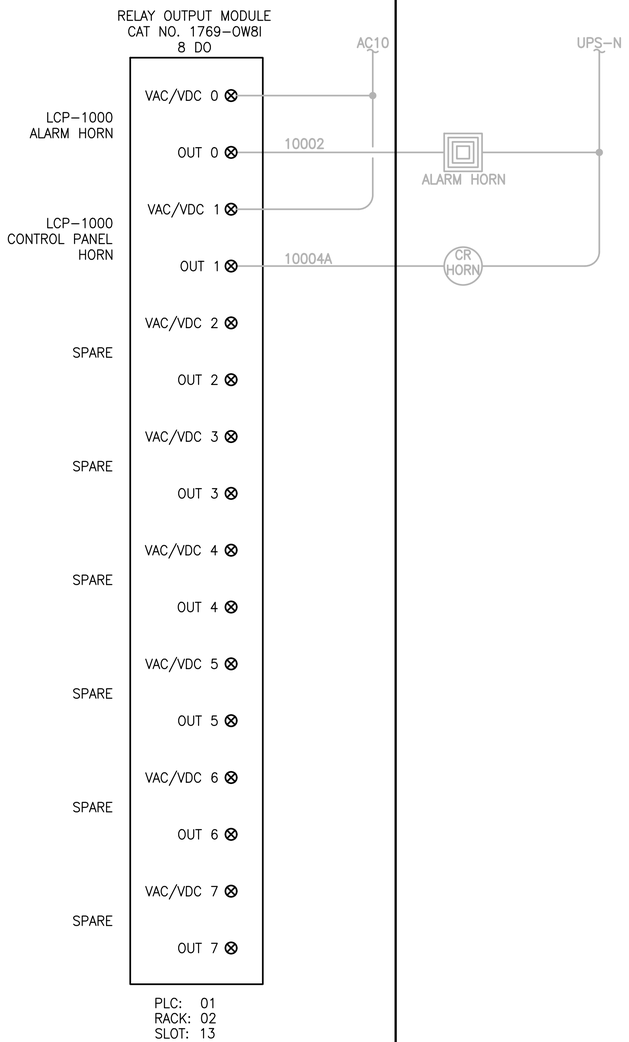

NOTES:

1. CONTRACTOR TO REPLACE EXISTING 1746SC–OAP8I WITH NEW 1769–OW8I.
2. NOT ALL EXISTING TERMINAL BLOCKS, PANEL DEVICES, OR FIELD CONNECTIONS ARE SHOWN ON THE DRAWING.
3. EXISTING COMPONENT LABELING FROM TSI AS–BUILT DRAWINGS. CONTRACTOR IS RESPONSIBLE FOR FIELD–VERIFYING THIS INFORMATION.

PROJECT WORK SHOWN ON THIS DRAWING IS ALL INCLUDED IN SCHEDULE A

LEGEND:

- WIRING INTERNAL TO PANEL
- FIELD WIRING
- ?? — DEVICE TERMINAL
- ??? — FEED–THROUGH TERMINAL IN PANEL
- SHLD — SHIELD TERMINAL IN PANEL
- ??? — GROUND TERMINAL IN PANEL
- ?A ??? — FUSE TERMINAL IN PANEL
- ?A ??? — CIRCUIT BREAKER TERMINAL IN PANEL
- NC / CR??? C / NO — RELAY TERMINAL IN PANEL

	REVISIONS	DATE	BY

DESIGNED J. VONDERAHE
DRAWN J. VONDERAHE
CHECKED J. MURPHY
APPROVED B. BUNKER

ONE INCH AT FULL SCALE.
IF NOT, SCALE ACCORDINGLY

FILE NAME PS1598102–I114
JOB No. 216–1598–102
DATE FEBRUARY 2018

ARTHUR G. STOKES — STATE OF WASHINGTON — 34738 — REGISTERED PROFESSIONAL ENGINEER

FEBRUARY 23, 2018

Parametrix
ENGINEERING . PLANNING . ENVIRONMENTAL SCIENCES
1019 39TH AVENUE SE, SUITE 100 | PUYALLUP, WA 98374
P 253.604.6600
WWW.PARAMETRIX.COM

PROJECT NAME
THE CONSOLIDATED BOROUGH OF QUIL CEDA VILLAGE
MBR TREATMENT FACILITY UPGRADE
TULALIP, WASHINGTON

LCP-1000
PLC 1, RACK 2, SLOT 13
DISCRETE OUTPUTS

DRAWING NO.
90 OF 157

I114

PATH: U:\PSO\Projects\Clients\1598–TulalipTribes\216–1598–102 MBR Upgrade\99Svcs\CADD\DWG PLOTTED BY: vondejam DATE: Wednesday, February 21, 2018 2:22:31 PM LAYOUT: I114

LCP-1000

FIELD	TERMINAL BLOCKS	PLC	FIELD	TERMINAL BLOCKS	PLC

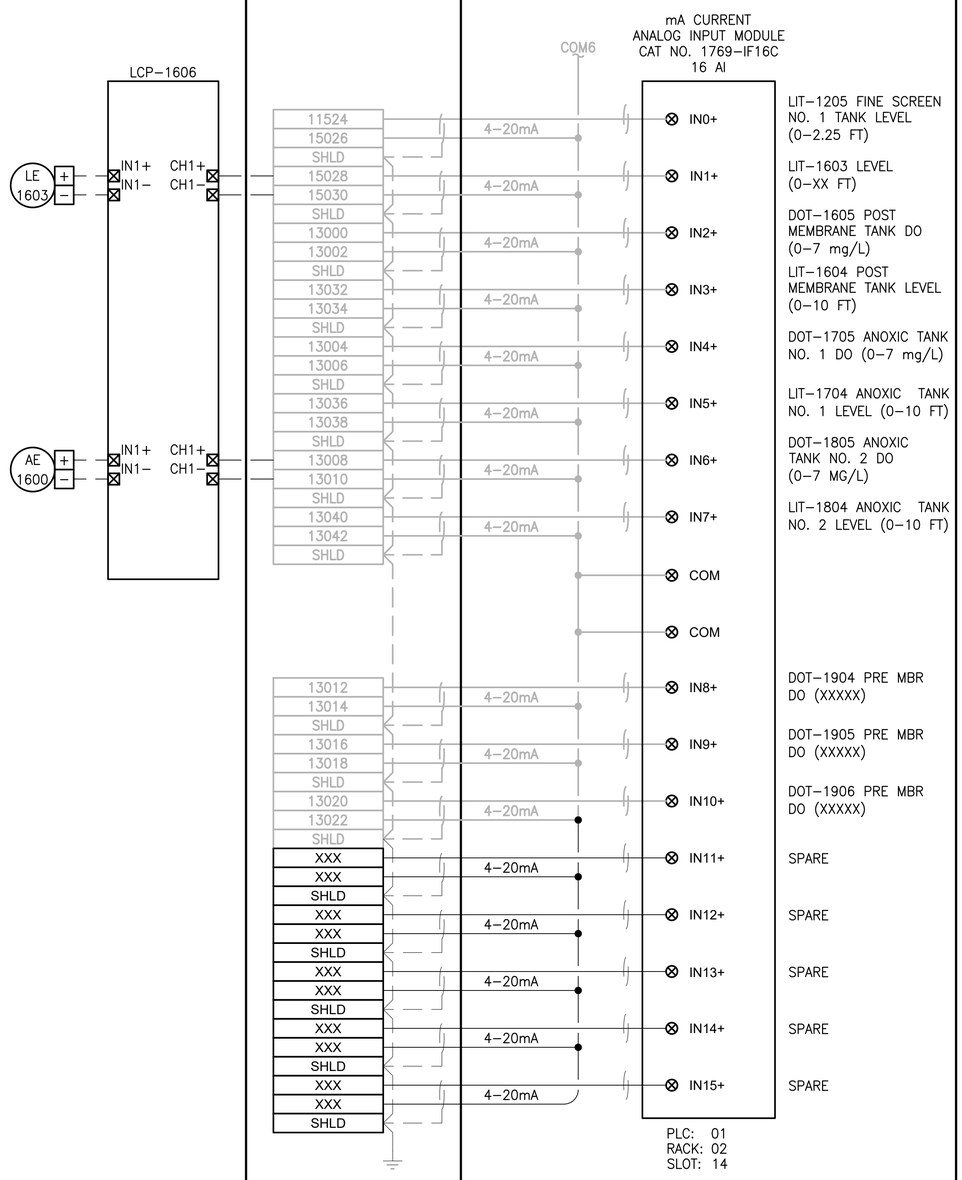

NOTES:

1. CONTRACTOR TO REPLACE EXISTING 1746–IA16 WITH NEW 1769–IF16C
2. NOT ALL EXISTING TERMINAL BLOCKS, PANEL DEVICES, OR FIELD CONNECTIONS ARE SHOWN ON THE DRAWING.
3. 4–20mA SHIELD SHALL BE GROUNDED IN ONLY ONE LOCATION, AT THE PLC CONTROL PANEL GROUND BUS BAR.
4. 4–20mA SHIELD SHALL BE CUT BACK AND HEAT SHRINK APPLIED.
5. EXISTING COMPONENT LABELING FROM TSI AS–BUILT DRAWINGS. CONTRACTOR IS RESPONSIBLE FOR FIELD–VERIFYING THIS INFORMATION.

PROJECT WORK SHOWN ON THIS DRAWING IS ALL INCLUDED IN SCHEDULE A

LEGEND:

- WIRING INTERNAL TO PANEL
- FIELD WIRING
- [??] DEVICE TERMINAL
- [???] FEED–THROUGH TERMINAL IN PANEL
- [SHLD] SHIELD TERMINAL IN PANEL
- [⏚ ???] GROUND TERMINAL IN PANEL
- [?A ???] FUSE TERMINAL IN PANEL
- [?A ↷ ???] CIRCUIT BREAKER TERMINAL IN PANEL
- RELAY TERMINAL IN PANEL (NC / CR??? C / NO)

REVISIONS	DATE	BY

DESIGNED J. VONDERAHE
DRAWN J. VONDERAHE
CHECKED J. MURPHY
APPROVED B. BUNKER

ONE INCH AT FULL SCALE. IF NOT, SCALE ACCORDINGLY

FILE NAME PS1598102–I115
JOB No. 216–1598–102
DATE FEBRUARY 2018

ARTHUR G. STOLE — STATE OF WASHINGTON — 34736 — REGISTERED PROFESSIONAL ENGINEER

FEBRUARY 23, 2018

Parametrix
ENGINEERING , PLANNING , ENVIRONMENTAL SCIENCES
1019 39TH AVENUE SE, SUITE 100 | PUYALLUP, WA 98374
P 253.604.6600
WWW.PARAMETRIX.COM

PROJECT NAME
THE CONSOLIDATED BOROUGH OF QUIL CEDA VILLAGE
MBR TREATMENT FACILITY UPGRADE
TULALIP, WASHINGTON

LCP-1000
PLC 1, RACK 2, SLOT 14
ANALOG INPUTS

DRAWING NO. 91 OF 157

I115

PATH: U:\PSO\Projects\Clients\1598–Tulalip Tribes\216–1598–102 MBR Upgrade\99Svcs\CADD\DWG PLOTTED BY: vondejam DATE: Wednesday, February 21, 2018 2:25:31 PM
LAYOUT: I115

LCP-1000

PLC	TERMINAL BLOCKS	FIELD	PLC	TERMINAL BLOCKS	FIELD

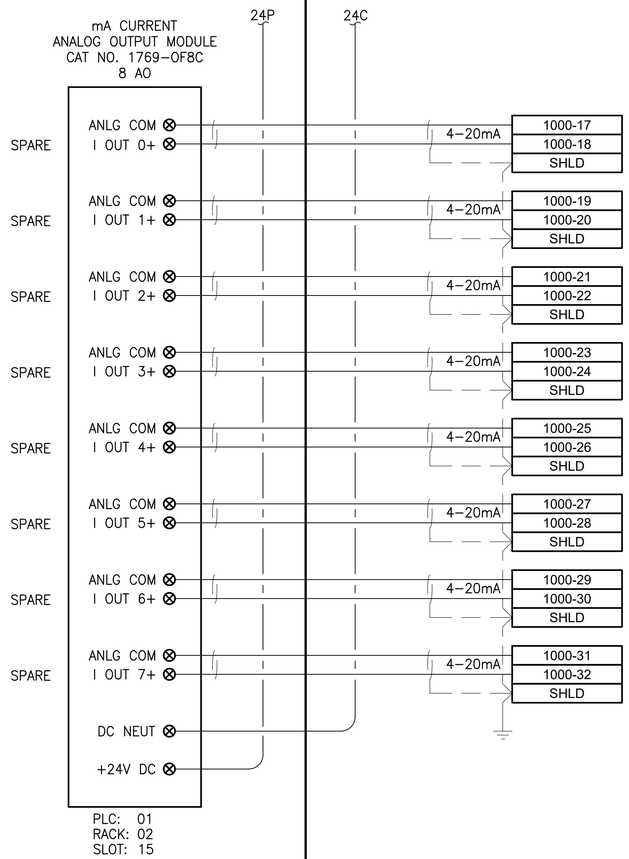

NOTES:

1. CONTRACTOR TO ADD NEW 1769–OF8C.
2. NOT ALL EXISTING TERMINAL BLOCKS, PANEL DEVICES, OR FIELD CONNECTIONS ARE SHOWN ON THE DRAWING.
3. 4–20mA SHIELD SHALL BE GROUNDED IN ONLY ONE LOCATION, AT THE PLC CONTROL PANEL GROUND BUS BAR.
4. 4–20mA SHIELD SHALL BE CUT BACK AND HEAT SHRINK APPLIED.

PROJECT WORK SHOWN ON THIS DRAWING IS ALL INCLUDED IN SCHEDULE A

LEGEND:

- WIRING INTERNAL TO PANEL
- FIELD WIRING
- [??] DEVICE TERMINAL
- [???] FEED–THROUGH TERMINAL IN PANEL
- [SHLD] SHIELD TERMINAL IN PANEL
- [⏚ ???] GROUND TERMINAL IN PANEL
- [?A ???] FUSE TERMINAL IN PANEL
- [?A ↷ ???] CIRCUIT BREAKER TERMINAL IN PANEL
- RELAY TERMINAL IN PANEL (NC / CR??? C / NO)

▷	REVISIONS	DATE	BY

DESIGNED J. VONDERAHE
DRAWN J. VONDERAHE
CHECKED J. MURPHY
APPROVED B. BUNKER

ONE INCH AT FULL SCALE.
IF NOT, SCALE ACCORDINGLY
FILE NAME P51598102–I116
JOB No. 216–1598–102
DATE FEBRUARY 2018

ARTHUR G. STOKES — STATE OF WASHINGTON — 34736 — REGISTERED PROFESSIONAL ENGINEER
FEBRUARY 23, 2018

Parametrix
ENGINEERING . PLANNING . ENVIRONMENTAL SCIENCES
1019 39TH AVENUE SE, SUITE 100 | PUYALLUP, WA 98374
P 253.604.6600
WWW.PARAMETRIX.COM

PROJECT NAME
THE CONSOLIDATED BOROUGH OF QUIL CEDA VILLAGE
MBR TREATMENT FACILITY UPGRADE
TULALIP, WASHINGTON

LCP-1000
PLC 1, RACK 2, SLOT 15
ANALOG OUTPUTS

DRAWING NO. 92 OF 157

I116

PATH: U:\PSO\Projects\Clients\1598–TulalipTribes\216–1598–102 MBR Upgrade\995vcs\CADD\DWG PLOTTED BY: vondejpm DATE: Friday, February 23, 2018 9:32:58 AM LAYOUT: I116

NOTES:

PROJECT WORK SHOWN ON THIS DRAWING IS ALL INCLUDED IN **SCHEDULE A**

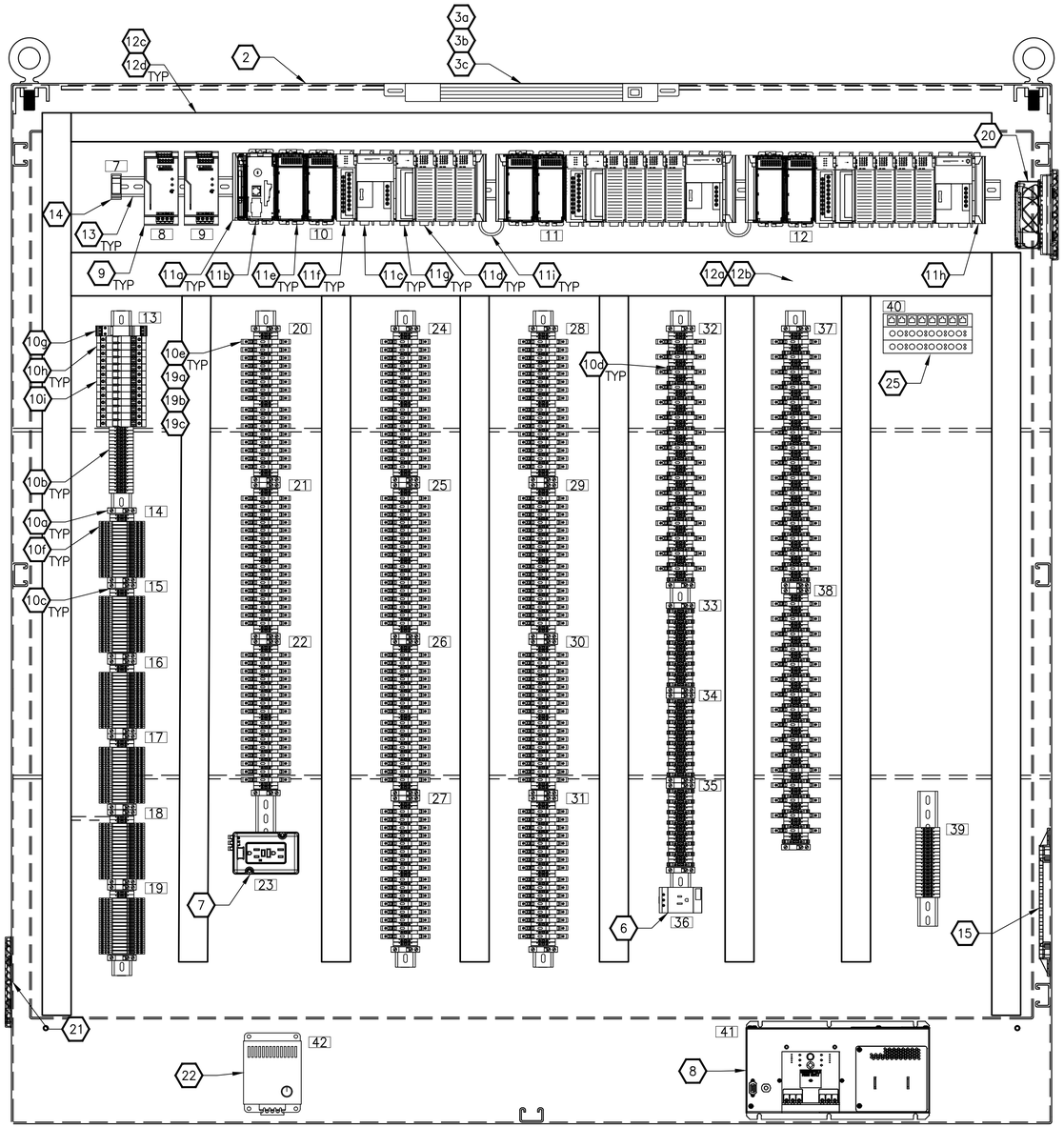

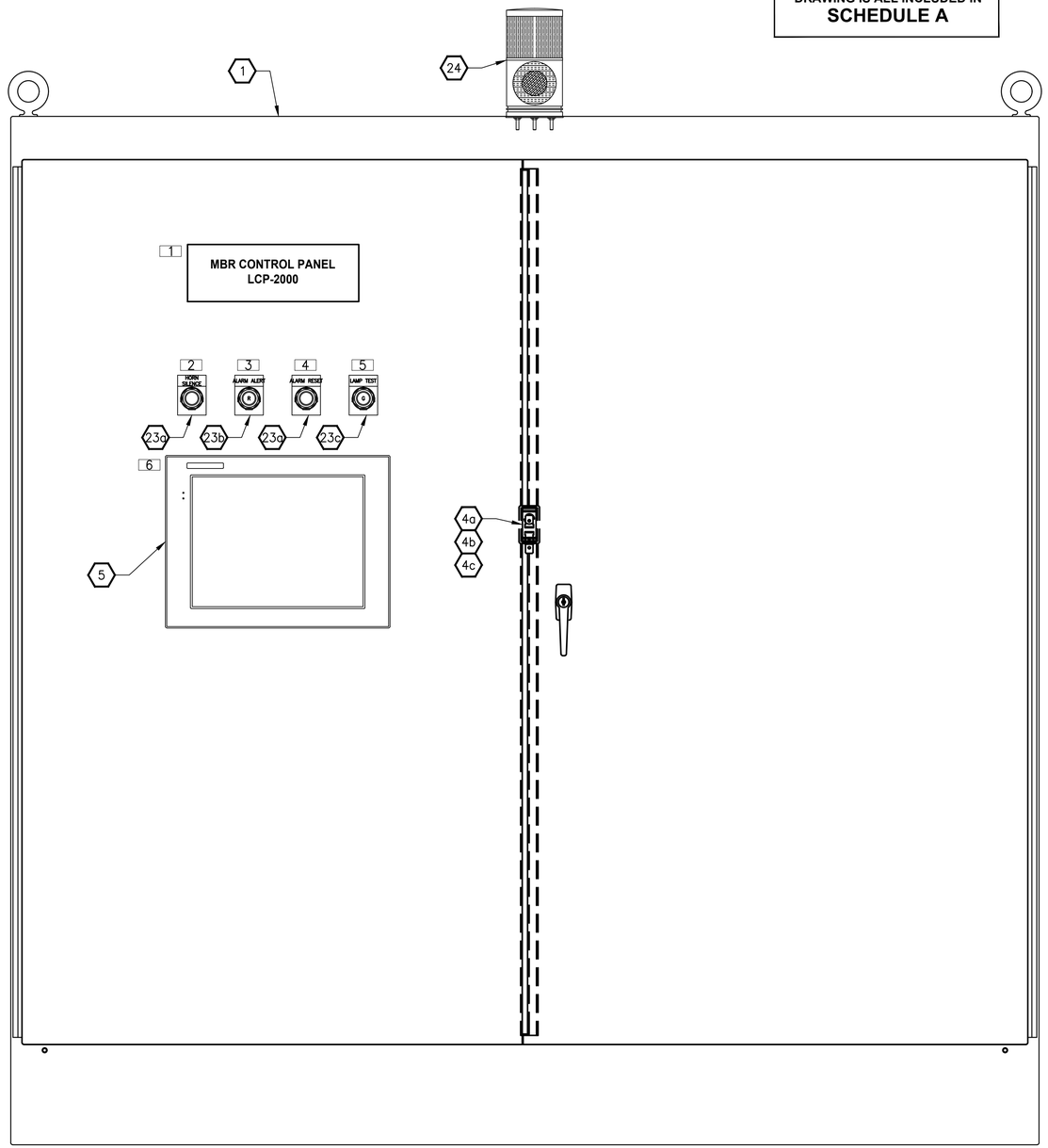

	REVISIONS	DATE	BY

DESIGNED J. VONDERAHE
DRAWN J. VONDERAHE
CHECKED J. MURPHY
APPROVED B. BUNKER

ONE INCH AT FULL SCALE. IF NOT, SCALE ACCORDINGLY

FILE NAME PS1598102-I200
JOB No. 216-1598-102
DATE FEBRUARY 2018

ARTHUR G. STOKES — STATE OF WASHINGTON — 34738 — REGISTERED PROFESSIONAL ENGINEER

FEBRUARY 23, 2018

Parametrix
ENGINEERING . PLANNING . ENVIRONMENTAL SCIENCES
1019 39TH AVENUE SE, SUITE 100 | PUYALLUP, WA 98374
P 253.604.6600
WWW.PARAMETRIX.COM

PROJECT NAME
THE CONSOLIDATED BOROUGH OF QUIL CEDA VILLAGE MBR TREATMENT FACILITY UPGRADE
TULALIP, WASHINGTON

LCP-2000 PANEL LAYOUT

DRAWING NO. 93 OF 157

I200

PATH: U:\PSO\Projects\Clients\1598-TulalipTribes\216-1598-102 MBR Upgrade\995vcs\CADD\DWG PLOTTED BY: vonderjpm DATE: Friday, February 23, 2018 5:35:42 PM
LAYOUT: I200

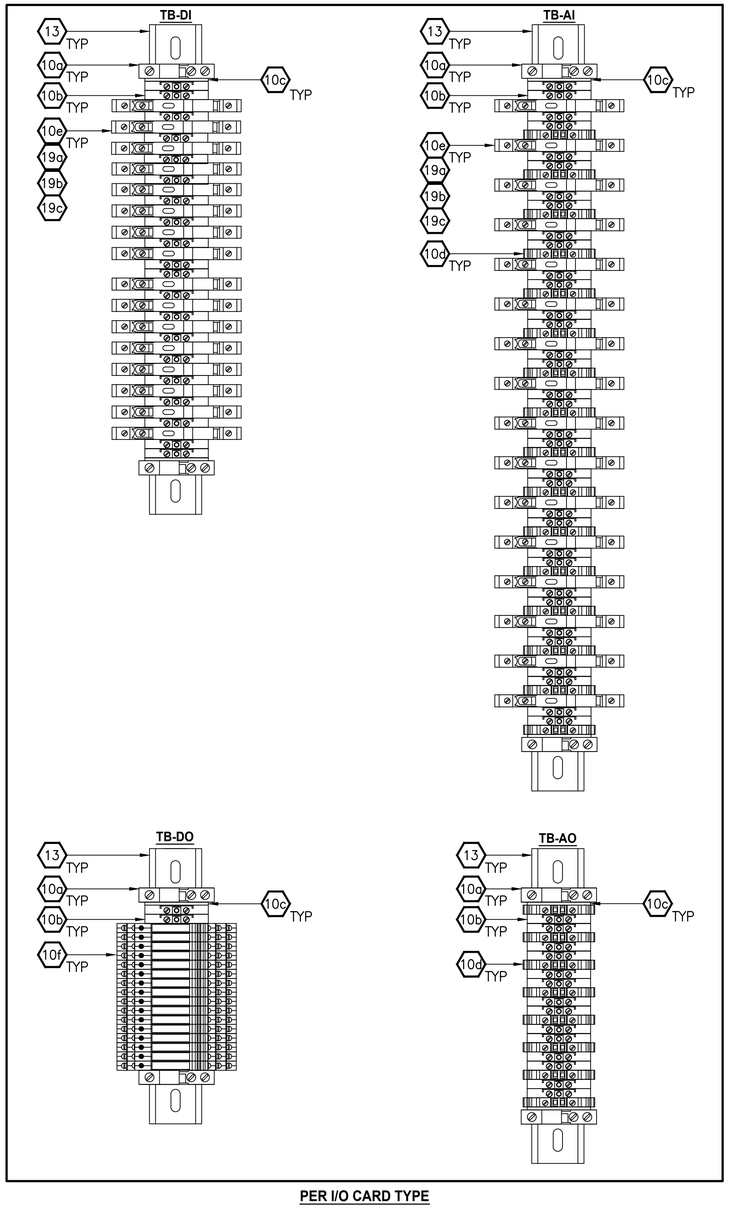

PER I/O CARD TYPE

TYPICAL TERMINAL STRIP ASSEMBLY

NO SCALE

LCP-2000 BILL OF MATERIALS

ITEM #	DESCRIPTION	MANUFACTURER	MODEL/CAT #
1	ENCLOSURE, FLOOR MOUNTED, NEMA 12, 72"X72"X24" SS	PENTAIR/HOFFMAN	A727224SSFSD
2	BACK PANEL, 68"X68", PAINTED STEEL	PENTAIR/HOFFMAN	A72P72
3a	ENCLOSURE INTERIOR LED LIGHT KIT, 90VAC-260VAC	PENTAIR/HOFFMAN	LEDA1S35
3b	LED LIGHT POWER CABLE, AC	PENTAIR/HOFFMAN	LEDA20C
3c	LED LIGHT EXTENSION CONNECTOR, AC	PENTAIR/HOFFMAN	LEDA10E
4a	LIGHT DOOR SWITCH	PENTAIR/HOFFMAN	ALFSWD
4b	LIGHT DOOR SWITCH MOUNTING BRACKET	PENTAIR/HOFFMAN	PDLFBRKT
4c	DOOR SWITCH CABLE	PENTAIR/HOFFMAN	LDSWITCH18
5	C-MORE HMI PANEL, 15IN	AUTOMATIONDIRECT	EA9-T15CL
6	RECEPTACLE, SIMPLEX	PHOENIX CONTACT	PHOENIX CONTACT 2963860
7	DIN-RAIL MOUNTED SERVICE OUTLET, 120VAC, 20A, GFI	PHEONIX CONTACT	EM-DUO 120/20/GFI/AUX - 5603049
8	UPS, 1500VA	TRIPPLITE	SMART1500
9	POWER SUPPLY	PHEONIX CONTACT	QUINT-PS-100-240AC/24DC/20 2938620
10a	END CLAMP	PHEONIX CONTACT	E/NS 35N #0800886
10b	FEED THROUGH TERMINAL	PHEONIX CONTACT	UT 2.5 #3044076
10c	END COVER	PHEONIX CONTACT	D-UT 2.5/10 #3047028
10d	UNIVERSAL GROUND TERMINAL BLOCK	PHEONIX CONTACT	UT 2.5-PE #3044092
10e	FUSED TERMINAL BLOCK	PHEONIX CONTACT	UK 6.5-HESI #3004171
10f	RELAY MODULE TERMINAL BLOCK	PHEONIX CONTACT	5603154
10g	CIRCUIT BREAKER 20A	EATON-CULTER HAMMER	20A C-CURVE / WMZT1C20
10h	CIRCUIT BREAKER 15A	EATON-CULTER HAMMER	15A C-CURVE / WMZT1C15
10i	CIRCUIT BREAKER 10A	EATON-CULTER HAMMER	10A C-CURVE / WMZT1C10
10j	CIRCUIT BREAKER 5A	EATON-CULTER HAMMER	5A C-CURVE / WMZT1C05
11a	COMPACT LOGIX LEFT ENDCAP	ALLEN BRADLEY	1769-ECL
11b	COMPACT LOGIX L36ERM PROCESSOR	ALLEN BRADLEY	1769-L36ERM 1
11c	COMPACT LOGIX POWER SUPPLY	ALLEN BRADLEY	1769-PB4
11d	COMPACT LOGIX DIGITAL INPUT CARD	ALLEN BRADLEY	1769-IA16
11e	COMPACT LOGIX DIGITAL OUTPUT CARD	ALLEN BRADLEY	1769-OB16
11f	COMPACT LOGIX ANALOG INPUT CARD	ALLEN BRADLEY	1769-IF16C
11g	COMPACT LOGIX ANALOG OUTPUT CARD	ALLEN BRADLEY	1769-OF8C
11h	COMPACT LOGIX RIGHT END CAP	ALLEN BRADLEY	1769-ECR
11i	COMPACT LOGIX EXPANSION CABLE	ALLEN BRADLEY	1769-CRL3
12a	PANDUIT, TYPE F, 3" WIDE, 4" DEEP (FT)	PANDUIT	F3X4LG6
12b	PANDUIT, TYPE F, 3" WIDE COVER (FT)	PANDUIT	C3LG6
12c	PANDUIT, TYPE F, 2" WIDE, 4" DEEP (FT)	PANDUIT	F2X4LG6
12d	PANDUIT, TYPE F, 2" WIDE COVER (FT)	PANDUIT	C2LG6
13	DIN RAIL PERFORATED, 35/15 HEAVY DUTY	PHEONIX CONTACT	NE 35/15 PERF 2000MM
14	PLUGTRAB SURGE SUPPRESSOR	PHEONIX CONTACT	PT 2-PE/S-120AC-ST
15	GROUND BUS BAR	EATON-CULTER HAMMER	GBK1420
19a	FUSE, 10A	BUSSMAN	AGC-10
19b	FUSE, 5A	BUSSMAN	AGC-5
19c	FUSE, 1A	BUSSMAN	AGC-1
20	FILTER FAN	RITTAL	RITTAL 3322.107
21	EXHAUST LOUVER	RITTAL	RITTAL 3322.207
22	ELECTRIC HEATER WITH BLOWER AND THERMOSTAT	HOFFMAN	DAH1002A
23a	PUSH BUTTON	SQUARE D	9001SKR1BH13
23b	PILOT LIGHT, RED	SQUARE D	9001SKT35LRR31
23c	PILOT LIGHT, GREEN	SQUARE D	9001SKT35LGG31
24	TOWER ALARM LIGHT	SQUARE D	XVC1B1K
25	ETHERNET SWITCH 1		

NOTES:

1. CONTRACTOR SHALL PROVIDE APPROPRIATE DIN RAIL MOUNTED LAYER 3 MANAGED SWITCH, SIZED TO PROVIDE A MINIMUM OF 50% SPARE PORTS IN BOTH COPPER AND FIBER MEDIA'S. CONTRACTOR SHALL COORDINATE SFP's AND OPTIC TYPE WITH EXISTING FIELD SWITCH FIBER MEDIA AND INTERFACES.

PROJECT WORK SHOWN ON THIS DRAWING IS ALL INCLUDED IN SCHEDULE A

NAMEPLATES

NAME PLATE	LINE	TEXT	PLATE SIZE	LETTERING SIZE
1	1 2	MBR CONTROL PANEL LCP-2000	4 X 12	1-1/4" 1-1/4"
2	1	HORN SILENCE	1 X 3	3/16"
3	1	ALARM ALERT	1 X 3	3/16"
4	1	ALARM RESET	1 X 3	3/16"
5	1	LAMP TEST	1 X 3	3/16"
6	1	HMI	1 X 3	3/16"
7	1	SS	1 X 3	3/16"
8	1	PS1A	1 X 3	3/16"
9	1	PS1B	1 X 3	3/16"
10	1	PLC 1 RACK 1	1 X 3	3/16"
11	1	PLC 1 RACK 2	1 X 3	3/16"
12	1	PLC 1 RACK 3	1 X 3	3/16"
13	1	120V	1 X 3	3/16"
14	1	R1,S1, DO	1 X 3	3/16"
15	1	R1,S2 DO	1 X 3	3/16"
16	1	R2,S0, DO	1 X 3	3/16"
17	1	R2,S1, DO	1 X 3	3/16"
18	1	R3,S0, DO	1 X 3	3/16"
19	1	R3,S1 DO	1 X 3	3/16"
20	1	R1,S5 DI	1 X 3	3/16"
21	1	R1,S6 DI	1 X 3	3/16"
22	1	R1,S6 DI	1 X 3	3/16"
23	1	120V, 20A GFI	1 X 3	3/16"
24	1	R2,S4 DI	1 X 3	3/16"
25	1	R2,S5 DI	1 X 3	3/16"
26	1	R2,S6 DI	1 X 3	3/16"
27	1	R2,S7 DI	1 X 3	3/16"
28	1	R3,S4 DI	1 X 3	3/16"
29	1	R3,S5 DI	1 X 3	3/16"
30	1	R3,S6 DI	1 X 3	3/16"
31	1	R3,S7 DI	1 X 3	3/16"
32	1	R1,S3 AI	1 X 3	3/16"
33	1	R1,S4 AO	1 X 3	3/16"
34	1	R2,S3 AO	1 X 3	3/16"
35	1	R3,S3 AO	1 X 3	3/16"
36	1	UPS RCPT	1 X 3	3/16"
37	1	R2,S2 AI	1 X 3	3/16"
38	1	R3,S2, AI	1 X 3	3/16"
39	1	24V (ISR)	1 X 3	3/16"
40	1	E-NET	1 X 3	3/16"
41	1	UPS	1 X 3	3/16"
42	1	PNL HTR	1 X 3	3/16"

	REVISIONS	DATE	BY
1	PLC PROCESSOR CHANGE	3-29-18	AS

DESIGNED J. VONDERAHE
DRAWN J. VONDERAHE
CHECKED J. MURPHY
APPROVED B. BUNKER

ONE INCH AT FULL SCALE. IF NOT, SCALE ACCORDINGLY

FILE NAME PS1598102-I201
JOB No. 216-1598-102
DATE FEBRUARY 2018

ARTHUR G. STOKES STATE OF WASHINGTON 34736 REGISTERED PROFESSIONAL ENGINEER

MARCH 29, 2018

Parametrix
ENGINEERING . PLANNING . ENVIRONMENTAL SCIENCES
1019 39TH AVENUE SE, SUITE 100 | PUYALLUP, WA 98374
P 253.604.6600
WWW.PARAMETRIX.COM

PROJECT NAME
THE CONSOLIDATED BOROUGH OF QUIL CEDA VILLAGE
MBR TREATMENT FACILITY UPGRADE
TULALIP, WASHINGTON

LCP-2000 TERMINAL STRIP ASSEMBLIES AND BILL OF MATERIALS

DRAWING NO. 94 OF 157

I201

LAYOUT: I201 PATH: U:\PSO\Projects\Clients\1598-TulalipTribes\216-1598-102 MBR Upgrade\99Sheets\CADD\DWG PLOTTED BY: milesdor DATE: Thursday, March 29, 2018 8:10:35 AM

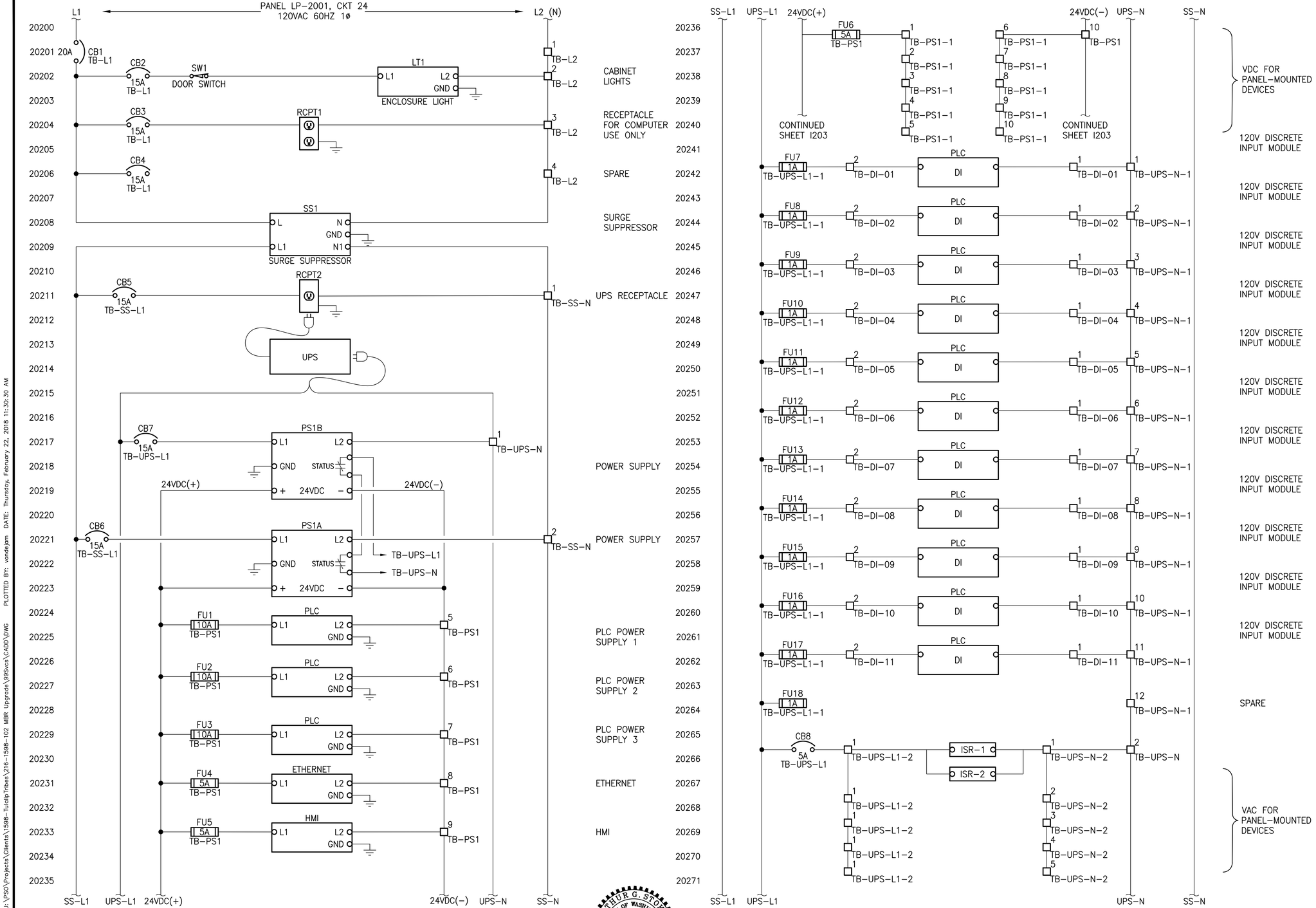

NOTES:

PROJECT WORK SHOWN ON THIS DRAWING IS ALL INCLUDED IN SCHEDULE A

REVISIONS	DATE	BY

DESIGNED D. MILES
DRAWN D. MILES
CHECKED J. MURPHY
APPROVED B. BUNKER

ONE INCH AT FULL SCALE. IF NOT, SCALE ACCORDINGLY

FILE NAME PS1598102-I202
JOB No. 216-1598-102
DATE FEBRUARY 2018

ARTHUR G. STORER — STATE OF WASHINGTON — 34736 — REGISTERED PROFESSIONAL ENGINEER

FEBRUARY 23, 2018

Parametrix
ENGINEERING . PLANNING . ENVIRONMENTAL SCIENCES
1019 39TH AVENUE SE, SUITE 100 | PUYALLUP, WA 98374
P.253.604.6600
WWW.PARAMETRIX.COM

PROJECT NAME
THE CONSOLIDATED BOROUGH OF QUIL CEDA VILLAGE
MBR TREATMENT FACILITY UPGRADE
TULALIP, WASHINGTON

LCP-2000
PANEL WIRING DIAGRAM

DRAWING NO. 95 OF 157

I202

PATH: U:\PSO\Projects\Clients\1598-TulalipTribes\216-1598-102 MBR Upgrade\99svcs\CADD\DWG
PLOTTED BY: vondejam DATE: Thursday, February 22, 2018 11:30:30 AM
LAYOUT: I202

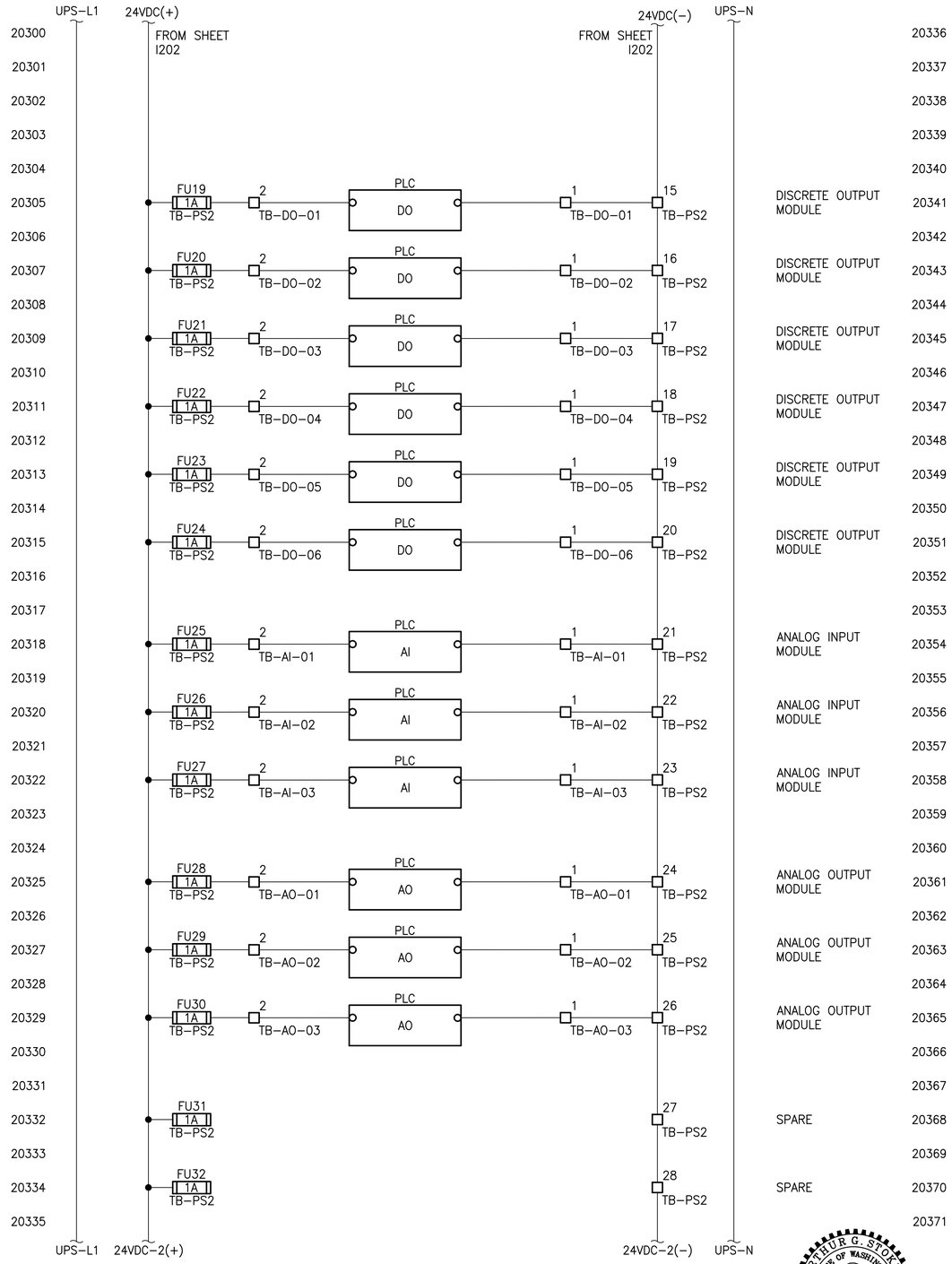

NOTES:

PROJECT WORK SHOWN ON THIS DRAWING IS ALL INCLUDED IN **SCHEDULE A**

REVISIONS	DATE	BY

DESIGNED D. MILES
DRAWN D. MILES
CHECKED J. MURPHY
APPROVED B. BUNKER

ONE INCH AT FULL SCALE. IF NOT, SCALE ACCORDINGLY
FILE NAME PS1598102-I203
JOB No. 216-1598-102
DATE FEBRUARY 2018

ARTHUR G. STOKES STATE OF WASHINGTON 34736 REGISTERED PROFESSIONAL ENGINEER

FEBRUARY 23, 2018

Parametrix
ENGINEERING . PLANNING . ENVIRONMENTAL SCIENCES
1019 39TH AVENUE SE, SUITE 100 | PUYALLUP, WA 98374
P 253.604.6600
WWW.PARAMETRIX.COM

PROJECT NAME
THE CONSOLIDATED BOROUGH OF QUIL CEDA VILLAGE
MBR TREATMENT FACILITY UPGRADE
TULALIP, WASHINGTON

LCP-2000
PANEL WIRING DIAGRAM

DRAWING NO. 96 OF 157
I203

LAYOUT: I203 PATH: U:\PSO\Projects\Clients\1598-TulalipTribes\216-1598-102 MBR Upgrade\99Svcs\CADD\DWG PLOTTED BY: vondejam DATE: Thursday, February 22, 2018 11:29:30 AM

LCP-2000

DISTRIBUTION PANEL

PANEL LP-2001
CKT 24
NEUTRAL — N

FIELD

TERMINAL BLOCKS (120 VAC)

TB-L1

20A CB1	SS1-5
15A CB2	SW1-1
15A CB3	RCPT1-L
15A CB4	SPARE

TB-L2 (N)

1	SS1-1
2	LT1-L2-N
3	RCPT1-N
4	SPARE

TB-SS-L1

SS1-6	
15A CB5	RCPT2-L
15A CB6	PS1A-L

TB-SS-N

SS1-2	
1	RCPT2-N
2	PS1A-N

TB-UPS-L1

UPS-L1	
TB-UPS-L1-1	
15A CB7	PS1B-L
5A CB8	TB-UPS-L1-2-1
TB-DI-03-25	
4	PS1A-13
5	

TB-UPS-N

UPS-N	
1	PS1B-N
2	TB-UPS-N-2-1
TB-UPS-N-1	
3	
TB-DI-03-26	
4	PS1A-14
5	

TERMINAL BLOCKS (24 VDC)

TB-PS1

PS1A (+)		
10A	FU1	PLC-PS1 (+)
10A	FU2	PLC-PS2 (+)
10A	FU3	PLC-PS3 (+)
5A	FU4	ETHERNET (+)
5A	FU5	HMI (+)
PS1B (+)		TB-PS1-1-1
PS1A (-)		
5A	FU6	PLC-PS1 (-)
7		PLC-PS2 (-)
8		PLC-PS3 (-)
9		ETHERNET (-)
10		HMI (-)
11		
PS1B (-)		TB-PS1-1-6
12		

CONTINUED ON SHEET I214
CONTINUED ON SHEET I205
CONTINUED ON SHEET I206

SURGE SUPPRESSION

TB-L1-CB1 — 5 — SS1 — 6 — TB-SS-L1-CB5
GND — 3 — GND
TB-L2(N)-1 — 1 — 2 — TB-SS-N-1

PANEL EQUIPMENT POWER SUPPLY

PS1A: TB-SS-L1-CB6 (L), TB-SS-N-2 (N), TB-PS1-FU1 (+), TB-PS1-7 (-), PE; 13 — TB-UPS-L1-4, 14 — PS1B-13
PS1B: TB-UPS-L1-CB7 (L), TB-UPS-N-1 (N), TB-PS1-FU6 (+), TB-PS1-12 (-), PE; 13 — PS1A-14, 14 — TB-UPS-N-4

FIELD I/O POWER SUPPLY

PANEL COMPONENTS

TB-L1-CB2 — SW1 DOOR SWITCH — LT1 PANEL LIGHT (L, N) — TB-L2(N)-2
TB-L1-CB3 — RCPT1 (L, N) — TB-L2(N)-3
TB-SS-L1-CB5 — RCPT2 (L, N)
UPS
TB-SS-N-1
TB-PS1-FU1, TB-PS1-7 — PLC POWER SUPPLY 1 (+, -, PE)
TB-PS1-FU2, TB-PS1-8 — PLC POWER SUPPLY 2 (+, -, PE)
TB-PS1-FU3, TB-PS1-9 — PLC POWER SUPPLY 3 (+, -, PE)
TB-PS1-FU4, TB-PS1-10 — ETHERNET (+, -, PE)
TB-PS1-FU5, TB-PS1-11 — HMI (+, -, PE)

TB-UPS-L1-2

TB-UPS-L1-CB8	
1	ISR 1,2
2	SPARE
3	SPARE
4	SPARE
5	SPARE

TB-UPS-N-2

TB-UPS-N-1	
1	ISR 1,2
2	SPARE
3	SPARE
4	SPARE
5	SPARE

TB-PS1-1

TB-PS1-FU6	
1	SPARE
2	SPARE
3	SPARE
4	SPARE
5	SPARE
TB-PS1-12	
6	SPARE
7	SPARE
8	SPARE
9	SPARE
10	SPARE

NOTES:

PROJECT WORK SHOWN ON THIS DRAWING IS ALL INCLUDED IN **SCHEDULE A**

LEGEND:

- WIRING INTERNAL TO PANEL
- FIELD WIRING
- [??] DEVICE TERMINAL
- [???] FEED-THROUGH TERMINAL IN PANEL
- SH [???] SHIELD TERMINAL IN PANEL
- [???] GROUND TERMINAL IN PANEL
- [?A ???] FUSE TERMINAL IN PANEL
- ?A [???] CIRCUIT BREAKER TERMINAL IN PANEL
- NC / CR??? C / NO — RELAY TERMINAL IN PANEL

PATH: U:\PSO\Projects\Clients\1598-TulalipTribes\216-1598-102 MBR Upgrade\99Scad\CADD\DWG PLOTTED BY: vondejpm DATE: Thursday, February 22, 2018 11:34:44 AM LAYOUT: I204

	REVISIONS	DATE	BY

DESIGNED D. MILES
DRAWN D. MILES
CHECKED J. MURPHY
APPROVED B. BUNKER

ONE INCH AT FULL SCALE. IF NOT, SCALE ACCORDINGLY
FILE NAME PS1598102-I204
JOB No. 216-1598-102
DATE FEBRUARY 2018

ARTHUR G. STOKES — STATE OF WASHINGTON — 34736 — REGISTERED PROFESSIONAL ENGINEER
FEBRUARY 23, 2018

Parametrix
ENGINEERING . PLANNING . ENVIRONMENTAL SCIENCES
1019 39TH AVENUE SE, SUITE 100 | PUYALLUP, WA 98374
P 253.604.6600
WWW.PARAMETRIX.COM

PROJECT NAME
THE CONSOLIDATED BOROUGH OF QUIL CEDA VILLAGE
MBR TREATMENT FACILITY UPGRADE
TULALIP, WASHINGTON

LCP-2000 POWER WIRING SCHEMATIC

DRAWING NO. 97 OF 157
I204

LCP-2000

DISTRIBUTION PANEL

TERMINAL BLOCKS (120 VAC I/O)

CONTINUED ON SHEET I204

TB-UPS-L1-1

UPS–L1	1A	FU5	TB–DI–01–1
	1A	FU6	TB–DI–02–1
	1A	FU7	TB–DI–03–1
	1A	FU8	TB–DI–04–1
	1A	FU9	TB–DI–05–1
	1A	FU10	TB–DI–06–1
	1A	FU11	TB–DI–07–1
	1A	FU12	TB–DI–08–1
	1A	FU13	TB–DI–09–1
	1A	FU14	TB–DI–10–1
	1A	FU15	TB–DI–11–1
	1A	FU16	SPARE

TB-UPS-N-1

UPS–N	1	TB–DI–01–2
	2	TB–DI–02–2
	3	TB–DI–03–2
	4	TB–DI–04–2
	5	TB–DI–05–2
	6	TB–DI–06–2
	7	TB–DI–07–2
	8	TB–DI–08–2
	9	TB–DI–09–2
	10	TB–DI–10–2
	11	TB–DI–11–2
	12	SPARE

SURGE SUPPRESSION

PANEL COMPONENTS

TB-DI-01			
TB–UPS–L1–1–FU5	1		
TB–UPS–N–1–1	2		SHEET I212
TB-DI-02			
TB–UPS–L1–1–FU6	1		
TB–UPS–N–1–2	2		SHEET I213
TB-DI-03			
TB–UPS–L1–1–FU7	1		
TB–UPS–N–1–3	2		SHEET I214
TB-DI-04			
TB–UPS–L1–1–FU8	1		
TB–UPS–N–1–4	2		SHEET I219
TB-DI-05			
TB–UPS–L1–1–FU9	1		
TB–UPS–N–1–5	2		SHEET I220
TB-DI-06			
TB–UPS–L1–1–FU10	1		
TB–UPS–N–1–6	2		SHEET I221
TB-DI-07			
TB–UPS–L1–1–FU11	1		
TB–UPS–N–1–7	2		SHEET I222
TB-DI-08			
TB–UPS–L1–1–FU12	1		
TB–UPS–N–1–8	2		SHEET I227
TB-DI-09			
TB–UPS–L1–1–FU13	1		
TB–UPS–N–1–9	2		SHEET I228
TB-DI-10			
TB–UPS–L1–1–FU14	1		
TB–UPS–N–1–10	2		SHEET I229
TB-DI-11			
TB–UPS–L1–1–FU15	1		
TB–UPS–N–1–11	2		SHEET I230

NOTES:

PROJECT WORK SHOWN ON THIS DRAWING IS ALL INCLUDED IN **SCHEDULE A**

LEGEND:

- WIRING INTERNAL TO PANEL
- FIELD WIRING
- [??] DEVICE TERMINAL
- [???] FEED–THROUGH TERMINAL IN PANEL
- [SH ???] SHIELD TERMINAL IN PANEL
- [⏚ ???] GROUND TERMINAL IN PANEL
- [?A ???] FUSE TERMINAL IN PANEL
- [?A ↷ ???] CIRCUIT BREAKER TERMINAL IN PANEL
- RELAY TERMINAL IN PANEL (NC / CR??? C / NO)

	REVISIONS	DATE	BY

DESIGNED D. MILES
DRAWN D. MILES
CHECKED J. MURPHY
APPROVED B. BUNKER

ONE INCH AT FULL SCALE. IF NOT, SCALE ACCORDINGLY

FILE NAME PS1598102–I205
JOB No. 216–1598–102
DATE FEBRUARY 2018

ARTHUR G. STOKES — STATE OF WASHINGTON — 34736 — REGISTERED PROFESSIONAL ENGINEER

FEBRUARY 23, 2018

Parametrix
ENGINEERING . PLANNING . ENVIRONMENTAL SCIENCES
1019 39TH AVENUE SE, SUITE 100 | PUYALLUP, WA 98374
P 253.604.6600
WWW.PARAMETRIX.COM

PROJECT NAME
THE CONSOLIDATED BOROUGH OF QUIL CEDA VILLAGE
MBR TREATMENT FACILITY UPGRADE
TULALIP, WASHINGTON

LCP-2000 POWER WIRING SCHEMATIC

DRAWING NO. 98 OF 157

I205

PATH: U:\PSO\Projects\Clients\1598–TulalipTribes\216–1598–102 MBR Upgrade\99Svcs\CADD\DWG PLOTTED BY: peterden DATE: Monday, February 26, 2018 8:27:29 AM
LAYOUT: I205

DISTRIBUTION PANEL	LCP-2000		
	TERMINAL BLOCKS (24 VDC I/O)	SURGE SUPPRESSION	PANEL COMPONENTS

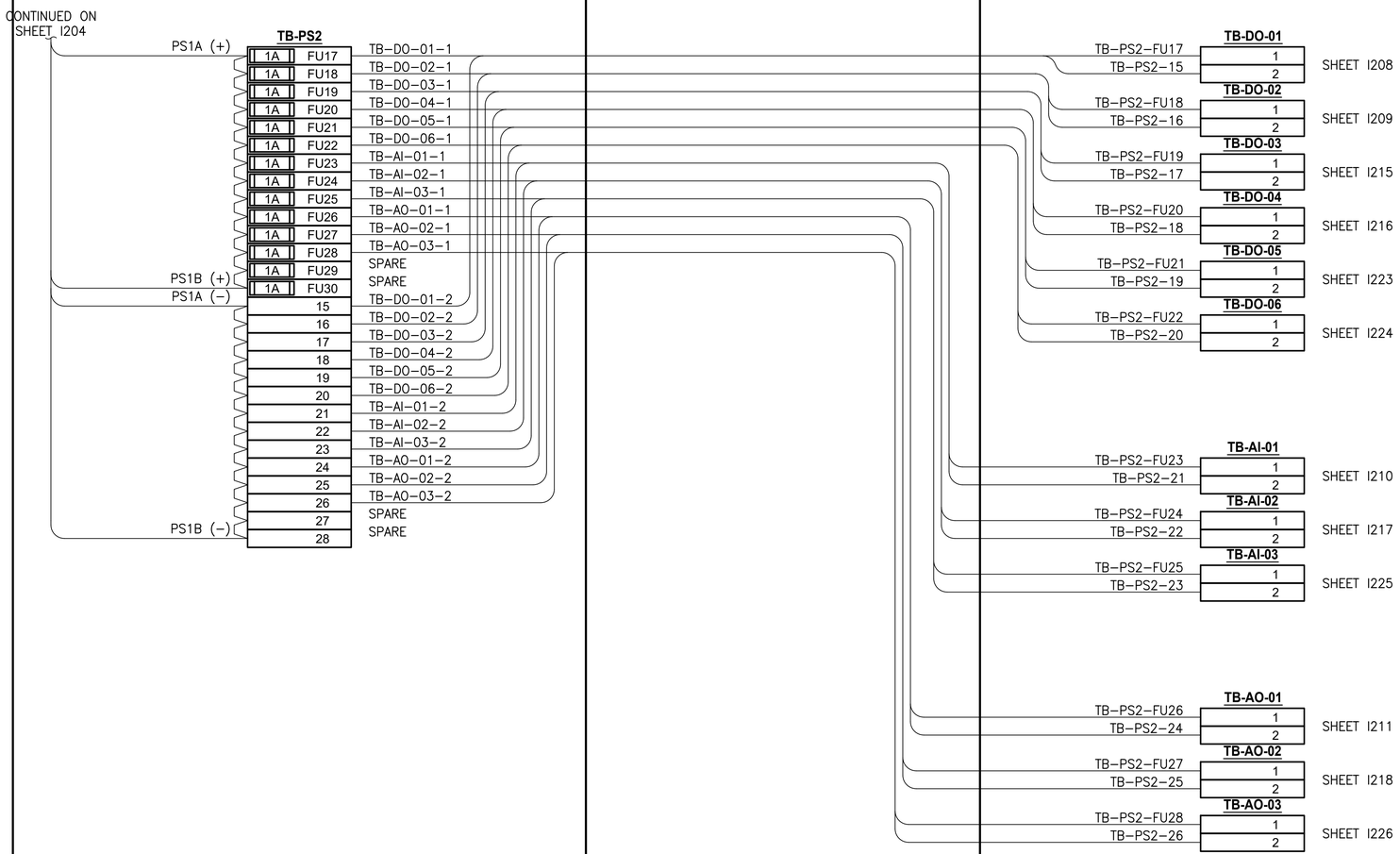

NOTES:

PROJECT WORK SHOWN ON THIS DRAWING IS ALL INCLUDED IN **SCHEDULE A**

LEGEND:

- WIRING INTERNAL TO PANEL
- FIELD WIRING
- ?? DEVICE TERMINAL
- ??? FEED-THROUGH TERMINAL IN PANEL
- SH ??? SHIELD TERMINAL IN PANEL
- ??? GROUND TERMINAL IN PANEL
- ?A ??? FUSE TERMINAL IN PANEL
- ?A ??? CIRCUIT BREAKER TERMINAL IN PANEL
- NC / CR??? C / NO RELAY TERMINAL IN PANEL

	REVISIONS	DATE	BY

DESIGNED D. MILES
DRAWN D. MILES
CHECKED J. MURPHY
APPROVED B. BUNKER

ONE INCH AT FULL SCALE. IF NOT, SCALE ACCORDINGLY

FILE NAME PS1598102-I206
JOB No. 216-1598-102
DATE FEBRUARY 2018

ARTHUR G. STOKES — STATE OF WASHINGTON — 34736 — REGISTERED PROFESSIONAL ENGINEER

FEBRUARY 23, 2018

Parametrix
ENGINEERING . PLANNING . ENVIRONMENTAL SCIENCES
1019 39TH AVENUE SE, SUITE 100 | PUYALLUP, WA 98374
P 253.604.6600
WWW.PARAMETRIX.COM

PROJECT NAME
THE CONSOLIDATED BOROUGH OF QUIL CEDA VILLAGE
MBR TREATMENT FACILITY UPGRADE
TULALIP, WASHINGTON

LCP-2000 POWER WIRING SCHEMATIC

DRAWING NO. 99 OF 157

I206

PATH: U:\PSO\Projects\Clients\1598-TulalipTribes\216-1598-102 MBR Upgrade\99Svcs\CADD\DWG PLOTTED BY: vondejam DATE: Wednesday, February 21, 2018 3:19:44 PM
LAYOUT: I206

RACK 01

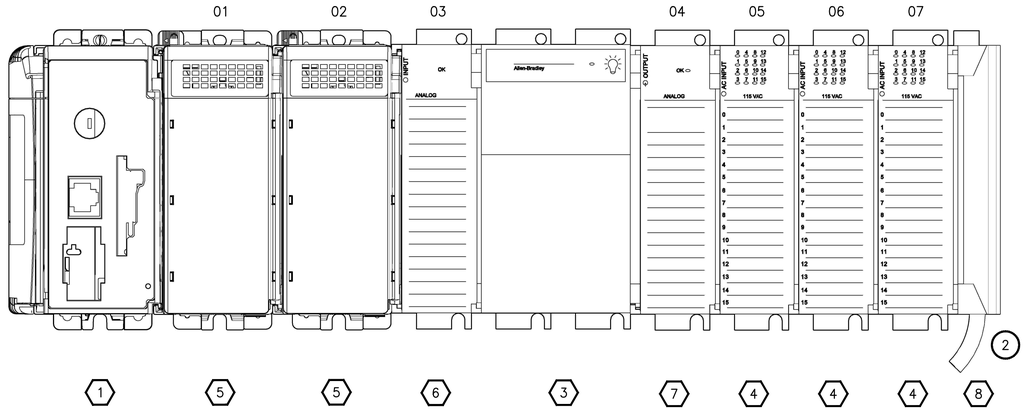

RACK 02

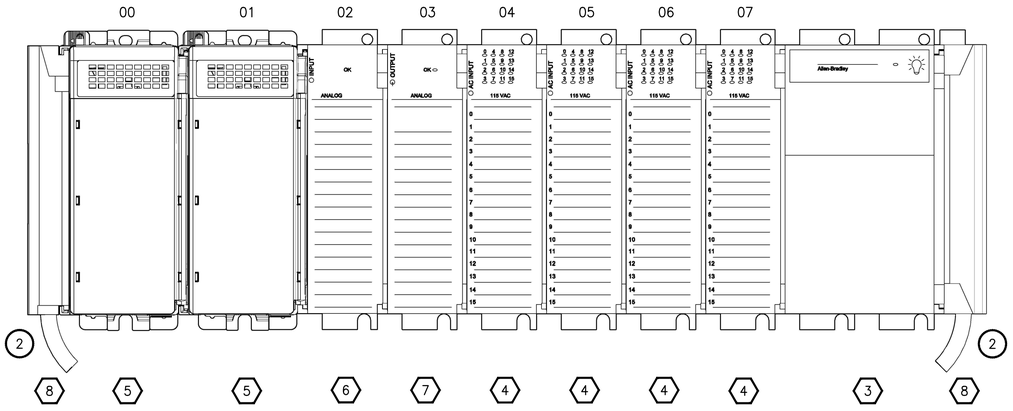

RACK 03

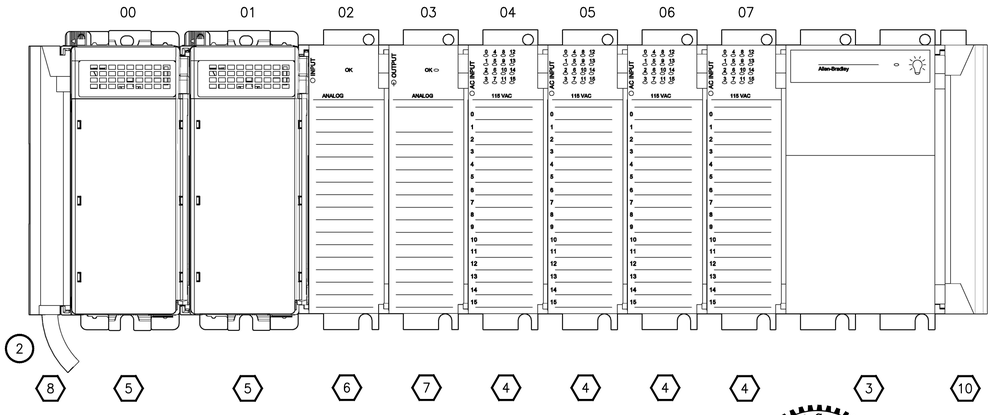

NOTES:

1. REFER TO SECTION 40 61 13 FOR SYSTEM INTEGRATOR SEQUENCING.
2. CONNECT RACKS WITH 1769-CRL3 EXPANSION CABLE (QTY. 2 REQUIRED FOR THIS RACK ASSEMBLY).

PROJECT WORK SHOWN ON THIS DRAWING IS ALL INCLUDED IN SCHEDULE A

LCP-2000 RACK LAYOUT LEGEND		
1	1769-L36ERM	COMPACTLOGIX CONTROLLER
2	NOT USED	
3	1769-PB4	POWER SUPPLY 24 VDC INPUT
4	1769-IA16	16 POINT 120 VAC INPUT MODULE
5	1769-OB16	16 POINT 24 VDC SOURCING OUTPUT MODULE
6	1769-IF16C	16 CHANNEL COMPACT HIGH-DENSITY ANALOG VOLTAGE INPUT MODULE
7	1769-OF8C	8 CHANNEL ANALOG CURRENT OUTPUT MODULE
8	1769-CRL3	1M RIGHT-TO-LEFT BUS EXPANSION CABLE
9	NOT USED	
10	1769-ECR	RIGHT END CAP/TERMINATOR
11	NOT USED	

	REVISIONS	DATE	BY
1	PLC PROCESSOR CHANGE	3-29-18	AS

DESIGNED D. MILES
DRAWN D. MILES
CHECKED J. MURPHY
APPROVED B. BUNKER

ONE INCH AT FULL SCALE. IF NOT, SCALE ACCORDINGLY
FILE NAME PS1598102-I207
JOB No. 216-1598-102
DATE FEBRUARY 2018

ARTHUR G. STORES — STATE OF WASHINGTON — 34736 — REGISTERED PROFESSIONAL ENGINEER
MARCH 29, 2018

Parametrix
ENGINEERING . PLANNING . ENVIRONMENTAL SCIENCES
1019 39TH AVENUE SE, SUITE 100 | PUYALLUP, WA 98374
P 253.604.6600
WWW.PARAMETRIX.COM

PROJECT NAME
THE CONSOLIDATED BOROUGH OF QUIL CEDA VILLAGE
MBR TREATMENT FACILITY UPGRADE
TULALIP, WASHINGTON

LCP-2000 PLC RACK ASSEMBLY

DRAWING NO. 100 OF 157
I207

PATH: U:\PSO\Projects\Clients\1598-Tulalip Tribes\216-1598-102 MBR Upgrade\99Svcs\CAD0\DWG PLOTTED BY: milesdr DATE: Thursday, March 29, 2018 8:12:53 AM LAYOUT: I207

LCP-2000

PLC

24VDC
OUTPUT MODULE
CAT NO. 1769-OB16
16 DO

	+VDC	TB-PS2-FU17
SPARE	OUT 0	TB-DO-01-R0
P-2225 JOG CALL	OUT 1	TB-DO-01-R1
P-2225 AUTO CALL	OUT 2	TB-DO-01-R2
SPARE	OUT 3	TB-DO-01-R3
P-2226 JOG CALL	OUT 4	TB-DO-01-R4
P-2226 AUTO CALL	OUT 5	TB-DO-01-R5
V-2312 VALVE STOP	OUT 6	TB-DO-01-R6
V-2312 VALVE OPEN	OUT 7	TB-DO-01-R7
V-2312 VALVE CLOSE	OUT 8	TB-DO-01-R8
88TH PUMP STATION RUNNING	OUT 9	TB-DO-01-R9
(RED LIGHT)	OUT 10	TB-DO-01-R10
(RED LIGHT)	OUT 11	TB-DO-01-R11
REUSE PUMP RUNNING	OUT 12	TB-DO-01-R12
ENV PUMP RUNNING	OUT 13	TB-DO-01-R13
ALARM HORN	OUT 14	TB-DO-01-R14
ALARM CONTROL RELAY	OUT 15	TB-DO-01-R15
	DC COM	TB-PS2-15

PLC: 01
RACK: 01
SLOT: 01

TERMINAL BLOCKS

TB-UPS-L1 ← UPS-L1
TB-UPS-N ← UPS-N
TB-PS2-FU17
TB-PS2-15

TB-DO-01

1	R01-S01-24V	
2	R01-S01-COM	
R0	R01-S01-DO0	NC / C / NO
R1	R01-S01-DO1	NC / C / NO
R2	R01-S01-DO2	NC / C / NO
R3	R01-S01-DO3	NC / C / NO
R4	R01-S01-DO4	NC / C / NO
R5	R01-S01-DO5	NC / C / NO
R6	R01-S01-DO6	NC / C / NO
R7	R01-S01-DO7	NC / C / NO
R8	R01-S01-DO8	NC / C / NO
R9	R01-S01-DO9	NC / C / NO
R10	R01-S01-DO10	NC / C / NO
R11	R01-S01-DO11	NC / C / NO
R12	R01-S01-DO12	NC / C / NO
R13	R01-S01-DO13	NC / C / NO
R14	R01-S01-DO14	NC / C / NO
R15	R01-S01-DO15	NC / C / NO

JUNCTION BOX OR PANEL MOUNTED DEVICES

P-2225-XX	LCP-2000-TB-DO-01-R0-11
P-2225-XX	LCP-2000-TB-DO-01-R1-14
P-2225-XX	LCP-2000-TB-DO-01-R2-14
P-2226-XX	LCP-2000-TB-DO-01-R3-11
P-2226-XX	LCP-2000-TB-DO-01-R4-XX
P-2226-XX	LCP-2000-TB-DO-01-R5-14
21330	
21332	
21334	
21336	
21338	
LTXX-X1	TB-DO-01-R9-14
LTXX-X1	TB-DO-01-R12-14
LTXX-X1	TB-DO-01-R13-14
AH1-X1	TB-DO-01-R14-14
CR-ALM-A1	TB-DO-01-R15-14

FIELD

XX	120 VAC JOG CALL
XX	AUTO CALL
	MCC BUCKET PLANT DRAIN PS PUMP #1 P-2225 (2)
XX	120 VAC JOG CALL
XX	AUTO CALL
	MCC BUCKET PLANT DRAIN PS PUMP #2 P-2226 (2)
F3 50	120 VAC VALVE STOP
15 8	VAC VALVE OPEN
	SLUDGE LOADOUT PAD VALVE V-2312
7	VALVE CLOSE
R	88TH PUMP STATION RUNNING
R	REUSE PUMP RUNNING
R	ENV PUMP RUNNING
AH1	ALARM HORN
CR ALM	ALARM CONTROL RELAY

FOR THIS DRAWING, ONLY PROJECT WORK INSIDE THIS BOX IS INCLUDED IN **SCHEDULE B**

NOTES:

1. CONTRACTOR TO COORDINATE ACTUAL TERMINAL NUMBER FOR WIRE TAGS BASED ON EQUIPMENT PROVIDED.
2. REFER TO SHEET E9 FOR MOTOR ELEMENTARY DIAGRAM.
3. EXISTING COMPONENT LABELING FROM TSI AS-BUILT DRAWINGS. CONTRACTOR IS RESPONSIBLE FOR FIELD VERIFYING THIS INFORMATION.

ALL PROJECT WORK OUTSIDE THE BOX NOTED FOR SCHEDULE B, SHALL BE **SCHEDULE A**

LEGEND:

- WIRING INTERNAL TO PANEL
- FIELD WIRING
- ?? — DEVICE TERMINAL
- ??? — FEED-THROUGH TERMINAL IN PANEL
- SH ??? — SHIELD TERMINAL IN PANEL
- ??? — GROUND TERMINAL IN PANEL
- ?A ??? — FUSE TERMINAL IN PANEL
- ?A ??? — CIRCUIT BREAKER TERMINAL IN PANEL
- NC / CR??? C / NO — RELAY TERMINAL IN PANEL

REVISIONS	DATE	BY

DESIGNED D. MILES
DRAWN D. MILES
CHECKED J. MURPHY
APPROVED B. BUNKER

ONE INCH AT FULL SCALE. IF NOT, SCALE ACCORDINGLY

FILE NAME PS1598102-I208
JOB No. 216-1598-102
DATE FEBRUARY 2018

ARTHUR G. STOKES — STATE OF WASHINGTON — 34736 — REGISTERED PROFESSIONAL ENGINEER
FEBRUARY 23, 2018

Parametrix
ENGINEERING . PLANNING . ENVIRONMENTAL SCIENCES
1019 39TH AVENUE SE, SUITE 100 | PUYALLUP, WA 98374
P 253.604.6600
WWW.PARAMETRIX.COM

PROJECT NAME
THE CONSOLIDATED BOROUGH OF QUIL CEDA VILLAGE
MBR TREATMENT FACILITY UPGRADE
TULALIP, WASHINGTON

LCP-2000
PLC 1, RACK 1, SLOT 1
DISCRETE OUTPUTS

DRAWING NO. 101 OF 157
I208

PATH: U:\PSO\Projects\Clients\1598-TulalipTribes\216-1598-102 MBR Upgrade\99Svcs\CADD\DWG
PLOTTED BY: vondejpm DATE: Thursday, February 22, 2018 11:41:24 AM
LAYOUT: I208

LCP-2000		JUNCTION BOX OR PANEL MOUNTED DEVICES	FIELD
PLC	TERMINAL BLOCKS		

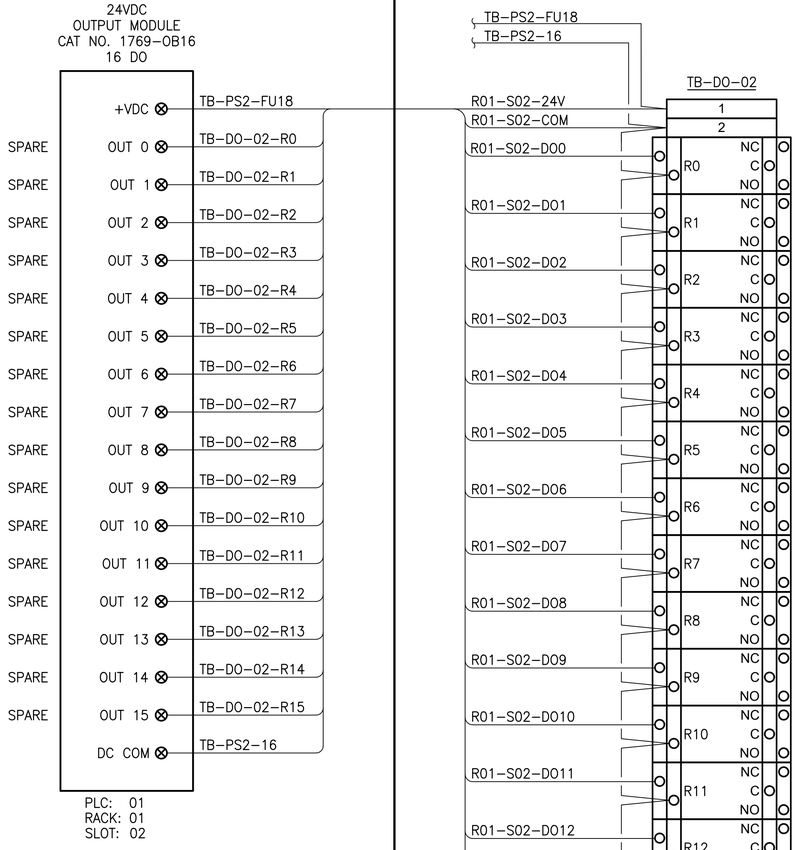

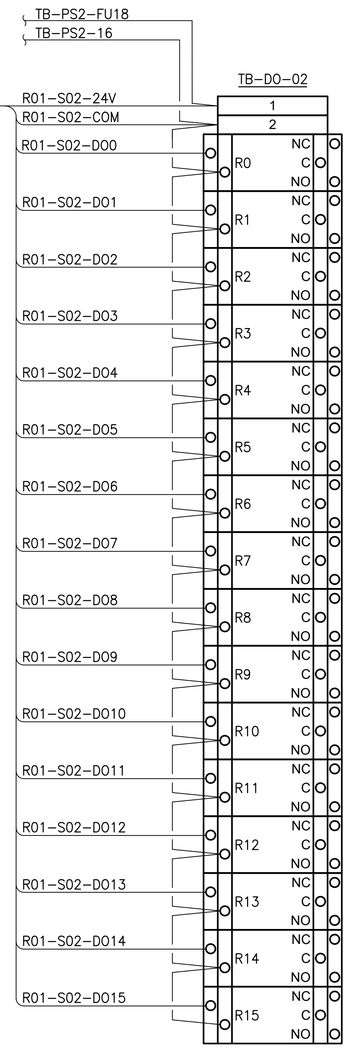

NOTES:

1. CONTRACTOR TO COORDINATE ACTUAL TERMINAL NUMBER FOR WIRE TAGS BASED ON EQUIPMENT PROVIDED.

PROJECT WORK SHOWN ON THIS DRAWING IS ALL INCLUDED IN SCHEDULE A

LEGEND:

- WIRING INTERNAL TO PANEL
- FIELD WIRING
- [??] DEVICE TERMINAL
- [???] FEED-THROUGH TERMINAL IN PANEL
- [SH ???] SHIELD TERMINAL IN PANEL
- [⏚ ???] GROUND TERMINAL IN PANEL
- [?A ???] FUSE TERMINAL IN PANEL
- [?A ↷ ???] CIRCUIT BREAKER TERMINAL IN PANEL
- [NC / CR??? C / NO] RELAY TERMINAL IN PANEL

▷	REVISIONS	DATE	BY

DESIGNED D. MILES
DRAWN D. MILES
CHECKED J. MURPHY
APPROVED B. BUNKER

ONE INCH AT FULL SCALE. IF NOT, SCALE ACCORDINGLY

FILE NAME PS1598102-I209
JOB No. 216-1598-102
DATE FEBRUARY 2018

ARTHUR G. STOKES — STATE OF WASHINGTON — 34736 — REGISTERED PROFESSIONAL ENGINEER

FEBRUARY 23, 2018

Parametrix
ENGINEERING . PLANNING . ENVIRONMENTAL SCIENCES
1019 39TH AVENUE SE, SUITE 100 | PUYALLUP, WA 98374
P 253.604.6600
WWW.PARAMETRIX.COM

PROJECT NAME
THE CONSOLIDATED BOROUGH OF QUIL CEDA VILLAGE
MBR TREATMENT FACILITY UPGRADE
TULALIP, WASHINGTON

LCP-2000
PLC 1, RACK 1, SLOT 2
DISCRETE OUTPUTS

DRAWING NO. 102 OF 157

I209

PATH: U:\PSO\Projects\Clients\1598-Tulalip Tribes\216-1598-102 MBR Upgrade\99Svcs\CADD\DWG PLOTTED BY: vondejpm DATE: Wednesday, February 21, 2018 3:38:34 PM LAYOUT: I209

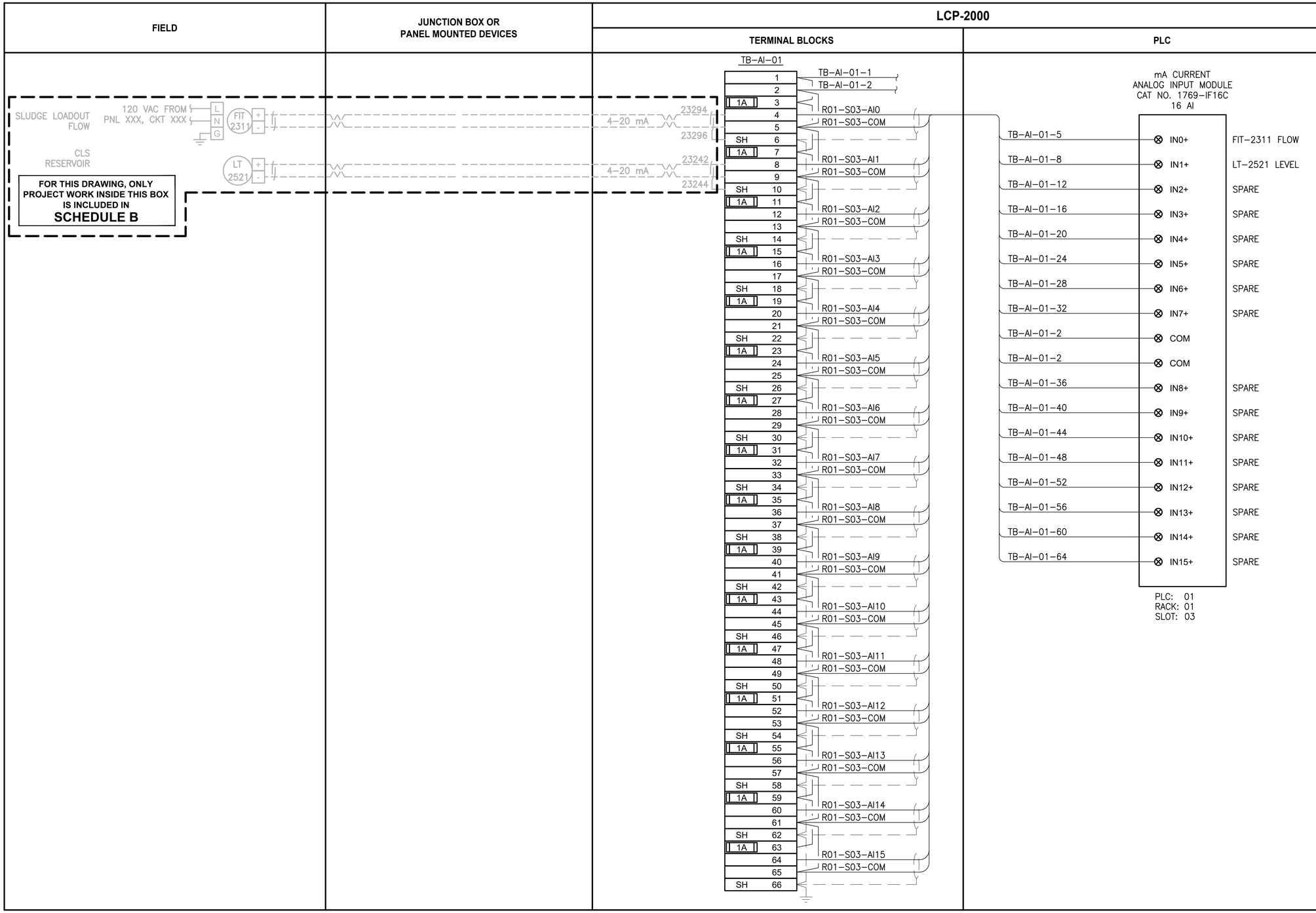

NOTES:

1. 4-20mA SHIELD SHALL BE GROUNDED IN ONLY ONE LOCATION, AT THE PLC CONTROL PANEL GROUND BUS BAR.
2. 4-20mA SHIELD SHALL BE CUT BACK AND HEAT SHRINK APPLIED.
3. CONTRACTOR TO COORDINATE ACTUAL WIRE NUMBERS BASED ON TERMINAL NUMBERS ON EQUIPMENT PROVIDED.

ALL PROJECT WORK OUTSIDE THE BOX NOTED FOR SCHEDULE B, SHALL BE SCHEDULE A

LEGEND:

- WIRING INTERNAL TO PANEL
- FIELD WIRING
- ?? DEVICE TERMINAL
- ??? FEED-THROUGH TERMINAL IN PANEL
- SH ??? SHIELD TERMINAL IN PANEL
- ??? GROUND TERMINAL IN PANEL
- ?A ??? FUSE TERMINAL IN PANEL
- ?A ??? CIRCUIT BREAKER TERMINAL IN PANEL
- NC CR??? C NO RELAY TERMINAL IN PANEL

REVISIONS	DATE	BY

DESIGNED D. MILES
DRAWN D. MILES
CHECKED J. MURPHY
APPROVED B. BUNKER

ONE INCH AT FULL SCALE. IF NOT, SCALE ACCORDINGLY
FILE NAME PS1598102-I210
JOB No. 216-1598-102
DATE FEBRUARY 2018

ARTHUR G. STOKES STATE OF WASHINGTON 34736 REGISTERED PROFESSIONAL ENGINEER
FEBRUARY 23, 2018

Parametrix
ENGINEERING . PLANNING . ENVIRONMENTAL SCIENCES
1019 39TH AVENUE SE, SUITE 100 | PUYALLUP, WA 98374
P 253.604.6600
WWW.PARAMETRIX.COM

PROJECT NAME
THE CONSOLIDATED BOROUGH OF QUIL CEDA VILLAGE
MBR TREATMENT FACILITY UPGRADE
TULALIP, WASHINGTON

LCP-2000
PLC 1, RACK 1, SLOT 3
ANALOG INPUTS

DRAWING NO. 103 OF 157
I210

LAYOUT: I210 PATH: U:\PSO\Projects\Clients\1598-TulalipTribes\216-1598-102 MBR Upgrade\99Svcs\CADD\DWG PLOTTED BY: vondejam DATE: Wednesday, February 21, 2018 3:41:07 PM

LCP-2000

PLC	TERMINAL BLOCKS	JUNCTION BOX OR PANEL MOUNTED DEVICES	FIELD

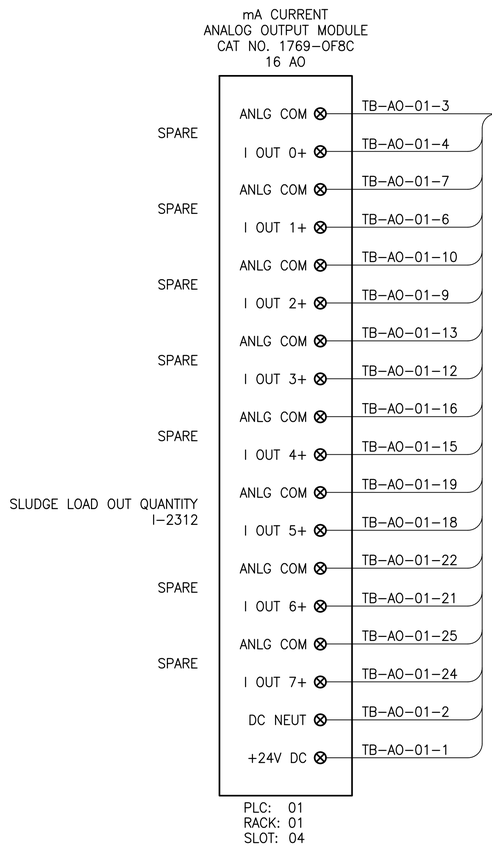

NOTES:

1. 4-20mA SHIELD SHALL BE GROUNDED IN ONLY ONE LOCATION, AT THE PLC CONTROL PANEL GROUND BUS BAR.
2. 4-20mA SHIELD SHALL BE CUT BACK AND HEAT SHRINK APPLIED.
3. CONTRACTOR TO COORDINATE ACTUAL WIRE NUMBERS BASED ON TERMINAL NUMBERS ON EQUIPMENT PROVIDED.

ALL PROJECT WORK OUTSIDE THE BOX NOTED FOR SCHEDULE B, SHALL BE
SCHEDULE A

LEGEND:

- WIRING INTERNAL TO PANEL
- FIELD WIRING
- [??] DEVICE TERMINAL
- [???] FEED-THROUGH TERMINAL IN PANEL
- SH [???] SHIELD TERMINAL IN PANEL
- [⏚ ???] GROUND TERMINAL IN PANEL
- [?A ???] FUSE TERMINAL IN PANEL
- [?A ↷ ???] CIRCUIT BREAKER TERMINAL IN PANEL
- NC / CR??? C / NO RELAY TERMINAL IN PANEL

REVISIONS	DATE	BY

DESIGNED D. MILES
DRAWN D. MILES
CHECKED J. MURPHY
APPROVED B. BUNKER

ONE INCH AT FULL SCALE.
IF NOT, SCALE ACCORDINGLY

FILE NAME PS1598102-I211
JOB No. 216-1598-102
DATE FEBRUARY 2018

ARTHUR G. STOLE — STATE OF WASHINGTON — 34736 — REGISTERED PROFESSIONAL ENGINEER

FEBRUARY 23, 2018

Parametrix
ENGINEERING , PLANNING , ENVIRONMENTAL SCIENCES
1019 39TH AVENUE SE, SUITE 100 | PUYALLUP, WA 98374
P 253.604.6600
WWW.PARAMETRIX.COM

PROJECT NAME
THE CONSOLIDATED BOROUGH OF
QUIL CEDA VILLAGE
MBR TREATMENT FACILITY UPGRADE
TULALIP, WASHINGTON

LCP-2000
PLC 1, RACK 1, SLOT 4
ANALOG OUTPUTS

DRAWING NO.
104 OF 157

I211

PATH: U:\PSO\Projects\Clients\1598-TulalipTribes\216-1598-102 MBR Upgrade\99Svcs\CADD\DWG PLOTTED BY: vondejam DATE: Wednesday, February 21, 2018 3:44:16 PM
LAYOUT: I211

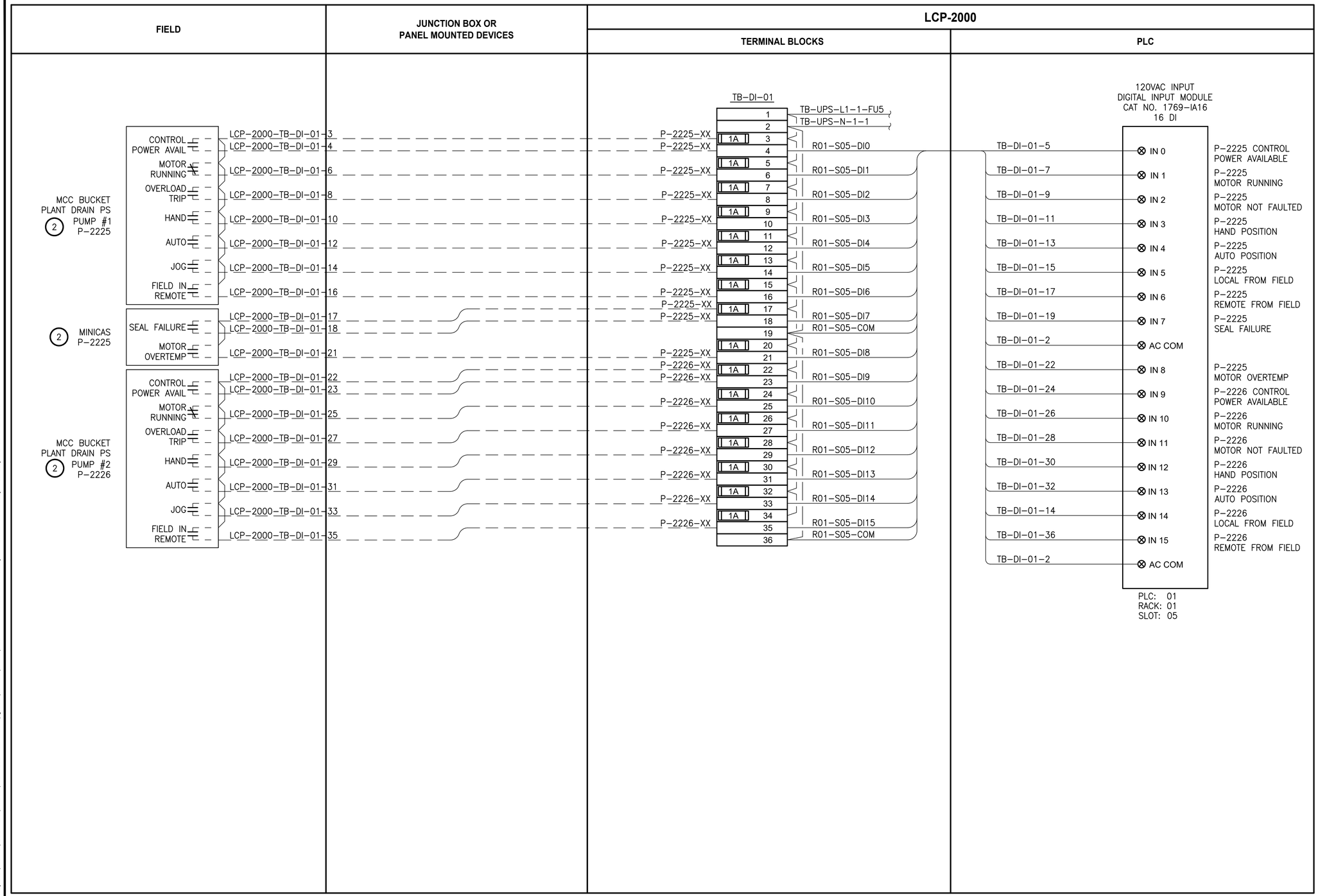

NOTES:

1. CONTRACTOR TO COORDINATE ACTUAL WIRE NUMBERS BASED ON TERMINAL NUMBERS ON EQUIPMENT PROVIDED.
2. REFER TO SHEET E9 FOR MOTOR ELEMENTARY DIAGRAM.

PROJECT WORK SHOWN ON THIS DRAWING IS ALL INCLUDED IN SCHEDULE A

LEGEND:

- WIRING INTERNAL TO PANEL
- FIELD WIRING
- ?? DEVICE TERMINAL
- ??? FEED-THROUGH TERMINAL IN PANEL
- SH ??? SHIELD TERMINAL IN PANEL
- ??? GROUND TERMINAL IN PANEL
- ?A ??? FUSE TERMINAL IN PANEL
- ?A ??? CIRCUIT BREAKER TERMINAL IN PANEL
- NC / CR??? C / NO RELAY TERMINAL IN PANEL

PATH: U:\PSO\Projects\Clients\1598-TulalipTribes\216-1598-102 MBR Upgrade\99Svcs\CADD\DWG PLOTTED BY: vondejam DATE: Wednesday, February 21, 2018 3:46:12 PM
LAYOUT: I212

REVISIONS	DATE	BY

DESIGNED D. MILES
DRAWN D. MILES
CHECKED J. MURPHY
APPROVED B. BUNKER

ONE INCH AT FULL SCALE. IF NOT, SCALE ACCORDINGLY

FILE NAME PS1598102-I212
JOB No. 216-1598-102
DATE FEBRUARY 2018

ARTHUR G. STOKES — STATE OF WASHINGTON — 34736 — REGISTERED PROFESSIONAL ENGINEER

FEBRUARY 23, 2018

Parametrix
ENGINEERING . PLANNING . ENVIRONMENTAL SCIENCES
1019 39TH AVENUE SE, SUITE 100 | PUYALLUP, WA 98374
P 253.604.6600
WWW.PARAMETRIX.COM

PROJECT NAME
THE CONSOLIDATED BOROUGH OF QUIL CEDA VILLAGE
MBR TREATMENT FACILITY UPGRADE
TULALIP, WASHINGTON

LCP-2000
PLC 1, RACK 1, SLOT 5
DISCRETE INPUTS

DRAWING NO. 105 OF 157

I212

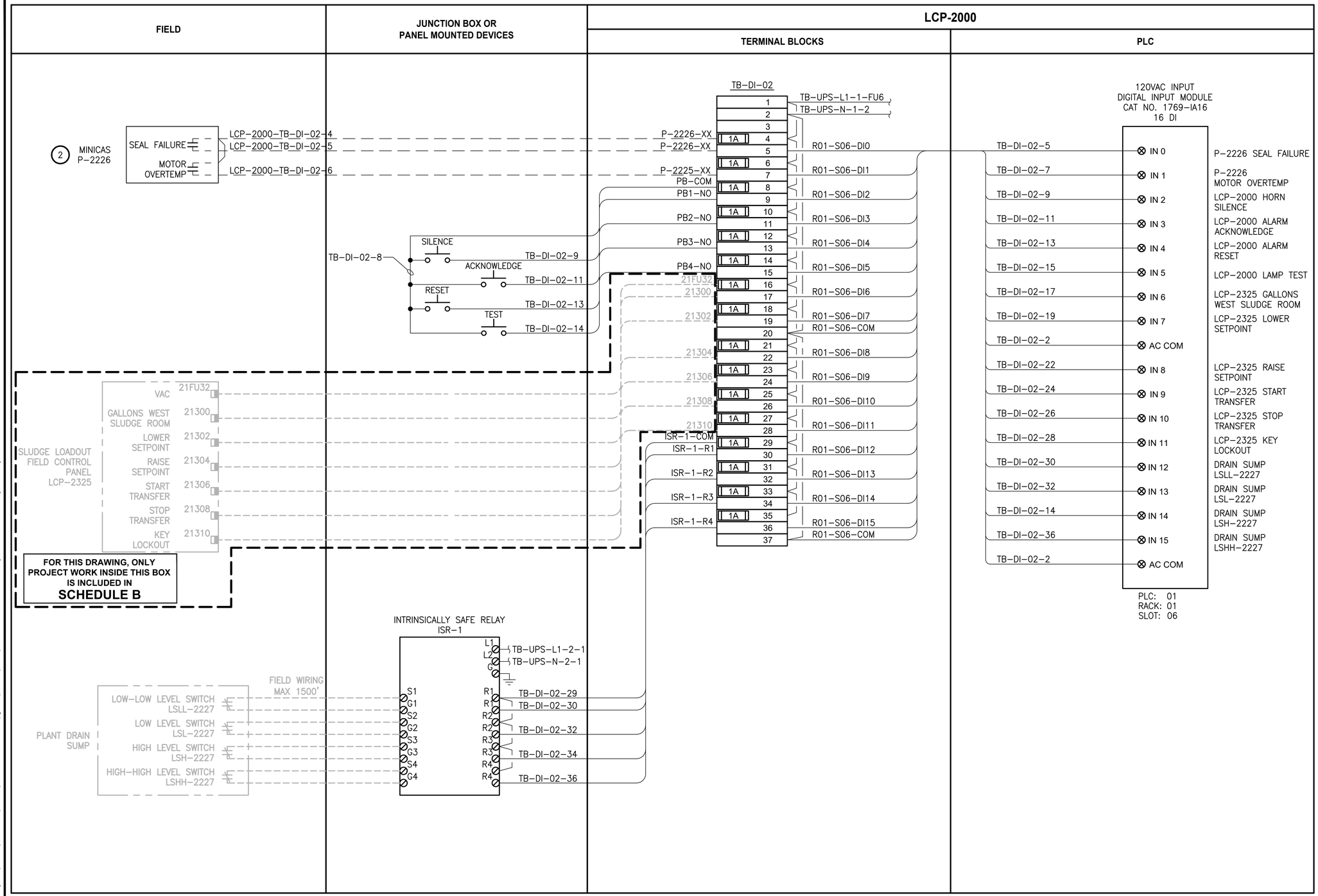

NOTES:

1. CONTRACTOR TO COORDINATE ACTUAL WIRE NUMBERS BASED ON TERMINAL NUMBERS ON EQUIPMENT PROVIDED.
2. REFER TO SHEET E8 FOR MOTOR ELEMENTARY DIAGRAM.

ALL PROJECT WORK OUTSIDE THE BOX NOTED FOR SCHEDULE B, SHALL BE SCHEDULE A

LEGEND:

- WIRING INTERNAL TO PANEL
- FIELD WIRING
- ?? DEVICE TERMINAL
- ??? FEED-THROUGH TERMINAL IN PANEL
- SH ??? SHIELD TERMINAL IN PANEL
- ??? GROUND TERMINAL IN PANEL
- ?A ??? FUSE TERMINAL IN PANEL
- ?A ??? CIRCUIT BREAKER TERMINAL IN PANEL
- NC / CR??? C / NO RELAY TERMINAL IN PANEL

PATH: U:\PSO\Projects\Clients\1598-TulalipTribes\216-1598-102 MBR Upgrade\99Svcs\CADD\DWG
PLOTTED BY: vondejam DATE: Wednesday, February 21, 2018 3:49:26 PM
LAYOUT: I213

REVISIONS	DATE	BY

DESIGNED D. MILES
DRAWN D. MILES
CHECKED J. MURPHY
APPROVED B. BUNKER

ONE INCH AT FULL SCALE. IF NOT, SCALE ACCORDINGLY
FILE NAME PS1598102-I213
JOB No. 216-1598-102
DATE FEBRUARY 2018

ARTHUR G. STOKES STATE OF WASHINGTON 34736 REGISTERED PROFESSIONAL ENGINEER
FEBRUARY 23, 2018

Parametrix
ENGINEERING . PLANNING . ENVIRONMENTAL SCIENCES
1019 39TH AVENUE SE, SUITE 100 | PUYALLUP, WA 98374
P 253.604.6600
WWW.PARAMETRIX.COM

PROJECT NAME
THE CONSOLIDATED BOROUGH OF QUIL CEDA VILLAGE
MBR TREATMENT FACILITY UPGRADE
TULALIP, WASHINGTON

LCP-2000
PLC 1, RACK 1, SLOT 6
DISCRETE INPUTS

DRAWING NO. 106 OF 157

I213

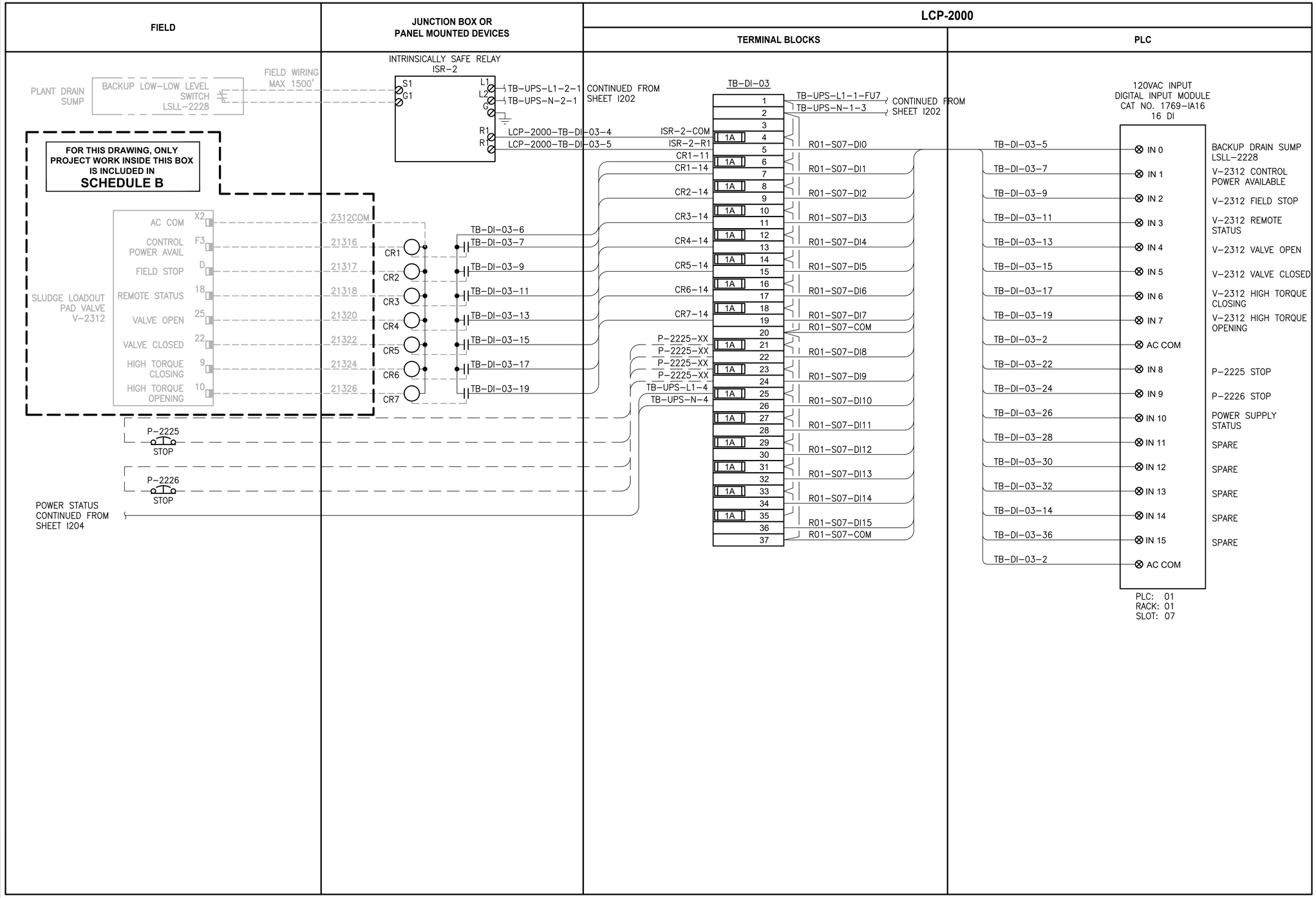

NOTES:

1. CONTRACTOR TO COORDINATE ACTUAL WIRE NUMBERS BASED ON TERMINAL NUMBERS ON EQUIPMENT PROVIDED.

ALL PROJECT WORK OUTSIDE THE BOX NOTED FOR SCHEDULE B, SHALL BE SCHEDULE A

LEGEND:

- WIRING INTERNAL TO PANEL
- FIELD WIRING
- ?? — DEVICE TERMINAL
- ??? — FEED-THROUGH TERMINAL IN PANEL
- SH ??? — SHIELD TERMINAL IN PANEL
- ??? — GROUND TERMINAL IN PANEL
- 1A ??? — FUSE TERMINAL IN PANEL
- ?A ??? — CIRCUIT BREAKER TERMINAL IN PANEL
- NC / CR??? C / NO — RELAY TERMINAL IN PANEL

REVISIONS	DATE	BY

DESIGNED D. MILES
DRAWN D. MILES
CHECKED J. MURPHY
APPROVED B. BUNKER

ONE INCH AT FULL SCALE. IF NOT, SCALE ACCORDINGLY

FILE NAME PS1598102-I214
JOB No. 216-1598-102
DATE FEBRUARY 2018

ARTHUR G. STOLE — STATE OF WASHINGTON — 34736 — REGISTERED PROFESSIONAL ENGINEER

FEBRUARY 23, 2018

Parametrix
ENGINEERING , PLANNING , ENVIRONMENTAL SCIENCES
1019 39TH AVENUE SE, SUITE 100 | PUYALLUP, WA 98374
P 253.604.6600
WWW.PARAMETRIX.COM

PROJECT NAME
THE CONSOLIDATED BOROUGH OF QUIL CEDA VILLAGE
MBR TREATMENT FACILITY UPGRADE
TULALIP, WASHINGTON

LCP-2000
PLC 1, RACK 1, SLOT 7
DISCRETE INPUTS

DRAWING NO. 107 OF 157

I214

PATH: U:\PSO\Projects\Clients\1598-TulalipTribes\216-1598-102 MBR Upgrade\99Svcs\CADD\DWG PLOTTED BY: vondejam DATE: Friday, February 23, 2018 9:57:06 AM
LAYOUT: I214

LCP-2000

PLC

24VDC
OUTPUT MODULE
CAT NO. 1769-OB16
16 DO

	+VDC	TB-PS2-FU19
SPARE	OUT 0	TB-DO-03-R0
ME-2125 AUTO CALL	OUT 1	TB-DO-03-R1
SPARE	OUT 2	TB-DO-03-R2
P-2150 AUTO CALL	OUT 3	TB-DO-03-R3
ME-2325 FAULT RESET	OUT 4	TB-DO-03-R4
ME-2325 CALL	OUT 5	TB-DO-03-R5
SPARE	OUT 6	TB-DO-03-R6
SPARE	OUT 7	TB-DO-03-R7
SPARE	OUT 8	TB-DO-03-R8
SPARE	OUT 9	TB-DO-03-R9
SPARE	OUT 10	TB-DO-03-R10
SPARE	OUT 11	TB-DO-03-R11
SPARE	OUT 12	TB-DO-03-R12
SPARE	OUT 13	TB-DO-03-R13
SPARE	OUT 14	TB-DO-03-R14
SPARE	OUT 15	TB-DO-03-R15
	DC COM	TB-PS2-17

PLC: 01
RACK: 02
SLOT: 00

TERMINAL BLOCKS

TB-PS2-FU19
TB-PS2-17

TB-DO-03

1		R02-S00-24V
2		R02-S00-COM
R0	NC C NO	R02-S00-DO0
R1	NC C NO	R02-S00-DO1
R2	NC C NO	R02-S00-DO2
R3	NC C NO	R02-S00-DO3
R4	NC C NO	R02-S00-DO4
R5	NC C NO	R02-S00-DO5
R6	NC C NO	R02-S00-DO6
R7	NC C NO	R02-S00-DO7
R8	NC C NO	R02-S00-DO8
R9	NC C NO	R02-S00-DO9
R10	NC C NO	R02-S00-DO10
R11	NC C NO	R02-S00-DO11
R12	NC C NO	R02-S00-DO12
R13	NC C NO	R02-S00-DO13
R14	NC C NO	R02-S00-DO14
R15	NC C NO	R02-S00-DO15

JUNCTION BOX OR PANEL MOUNTED DEVICES

ME-2125-X	LCP-2000-TB-DO-XX-RX-11
ME-2125-X	LCP-2000-TB-DO-XX-RX-14
P-2150-X	LCP-2000-TB-DO-XX-RX-11
P-2150-X	LCP-2000-TB-DO-XX-RX-14
22064	
22066	
(2)	
22068	

FIELD

FOR THIS DRAWING, ONLY PROJECT WORK INSIDE THIS BOX IS INCLUDED IN **SCHEDULE B**

XX	(+)	MBR #1 & #3 AIR BLOWER #1 ME-2125
XX	RUN	
XX	(+)	MIXED LIQUOR BACK-UP RECYCLE PUMP #1 & #3 P-2150
XX	RUN	
2	(+)	BIOREACTOR AIR BLOWER #2 ME-2325
1	FAULT RESET	
3	RUN	

NOTES:

1. CONTRACTOR TO COORDINATE ACTUAL WIRE NUMBERS BASED ON TERMINAL NUMBERS ON EQUIPMENT PROVIDED.

(2) TO BE MOVED FROM EXISTING PANEL TO NEW PANEL IN SCHEDULE "A".

ALL PROJECT WORK OUTSIDE THE BOX NOTED FOR SCHEDULE B, SHALL BE SCHEDULE A

LEGEND:

- WIRING INTERNAL TO PANEL
- FIELD WIRING
- [??] DEVICE TERMINAL
- [???] FEED-THROUGH TERMINAL IN PANEL
- [SH ???] SHIELD TERMINAL IN PANEL
- [⏚ ???] GROUND TERMINAL IN PANEL
- [?A ???] FUSE TERMINAL IN PANEL
- [?A ↷ ???] CIRCUIT BREAKER TERMINAL IN PANEL
- [NC / CR??? C / NO] RELAY TERMINAL IN PANEL

PATH: U:\PSO\Projects\Clients\1598-TulalipTribes\216-1598-102 MBR Upgrade\99Svcs\CADD\DWG
PLOTTED BY: vondejpm DATE: Wednesday, February 21, 2018 3:51:17 PM
LAYOUT: I215

	REVISIONS	DATE	BY

DESIGNED D. MILES
DRAWN D. MILES
CHECKED J. MURPHY
APPROVED B. BUNKER

ONE INCH AT FULL SCALE.
IF NOT, SCALE ACCORDINGLY

FILE NAME PS1598102-I215
JOB No. 216-1598-102
DATE FEBRUARY 2018

ARTHUR G. STOKES
STATE OF WASHINGTON
34738
REGISTERED
PROFESSIONAL ENGINEER

FEBRUARY 23, 2018

Parametrix
ENGINEERING . PLANNING . ENVIRONMENTAL SCIENCES
1019 39TH AVENUE SE, SUITE 100 | PUYALLUP, WA 98374
P 253.604.6600
WWW.PARAMETRIX.COM

PROJECT NAME
THE CONSOLIDATED BOROUGH OF
QUIL CEDA VILLAGE
MBR TREATMENT FACILITY UPGRADE
TULALIP, WASHINGTON

LCP-2000
PLC 1, RACK 2, SLOT 0
DISCRETE OUTPUTS

DRAWING NO.
108 OF 157

I215

LCP-2000

PLC	TERMINAL BLOCKS	JUNCTION BOX OR PANEL MOUNTED DEVICES	FIELD

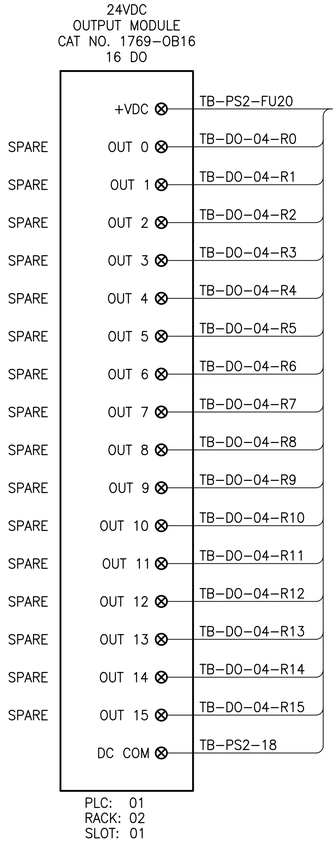

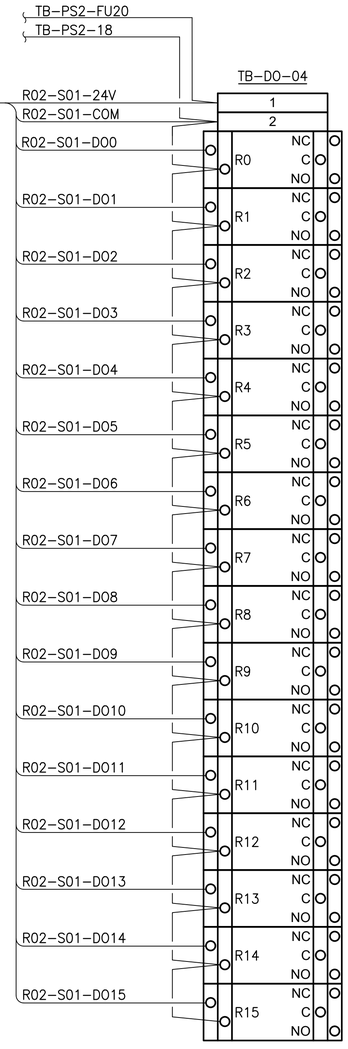

NOTES:

1. CONTRACTOR TO COORDINATE ACTUAL WIRE NUMBERS BASED ON TERMINAL NUMBERS ON EQUIPMENT PROVIDED.

PROJECT WORK SHOWN ON THIS DRAWING IS ALL INCLUDED IN SCHEDULE A

LEGEND:

- WIRING INTERNAL TO PANEL
- FIELD WIRING
- [??] DEVICE TERMINAL
- [???] FEED-THROUGH TERMINAL IN PANEL
- [SH ???] SHIELD TERMINAL IN PANEL
- [⏚ ???] GROUND TERMINAL IN PANEL
- [?A ???] FUSE TERMINAL IN PANEL
- [?A ↷ ???] CIRCUIT BREAKER TERMINAL IN PANEL
- [NC / CR??? C / NO] RELAY TERMINAL IN PANEL

REVISIONS	DATE	BY

DESIGNED D. MILES
DRAWN D. MILES
CHECKED J. MURPHY
APPROVED B. BUNKER

ONE INCH AT FULL SCALE. IF NOT, SCALE ACCORDINGLY

FILE NAME PS1598102-I216
JOB No. 216-1598-102
DATE FEBRUARY 2018

ARTHUR G. STOKES — STATE OF WASHINGTON — 34738 — REGISTERED PROFESSIONAL ENGINEER

FEBRUARY 23, 2018

Parametrix
ENGINEERING . PLANNING . ENVIRONMENTAL SCIENCES
1019 39TH AVENUE SE, SUITE 100 | PUYALLUP, WA 98374
P 253.604.6600
WWW.PARAMETRIX.COM

PROJECT NAME
THE CONSOLIDATED BOROUGH OF QUIL CEDA VILLAGE
MBR TREATMENT FACILITY UPGRADE
TULALIP, WASHINGTON

LCP-2000
PLC 1, RACK 2, SLOT 1
DISCRETE OUTPUTS

DRAWING NO. 109 OF 157

I216

PATH: U:\PSO\Projects\Clients\1598-TulalipTribes\216-1598-102 MBR Upgrade\99Svcs\CADD\DWG PLOTTED BY: vondejpm DATE: Wednesday, February 21, 2018 3:53:29 PM LAYOUT: I216

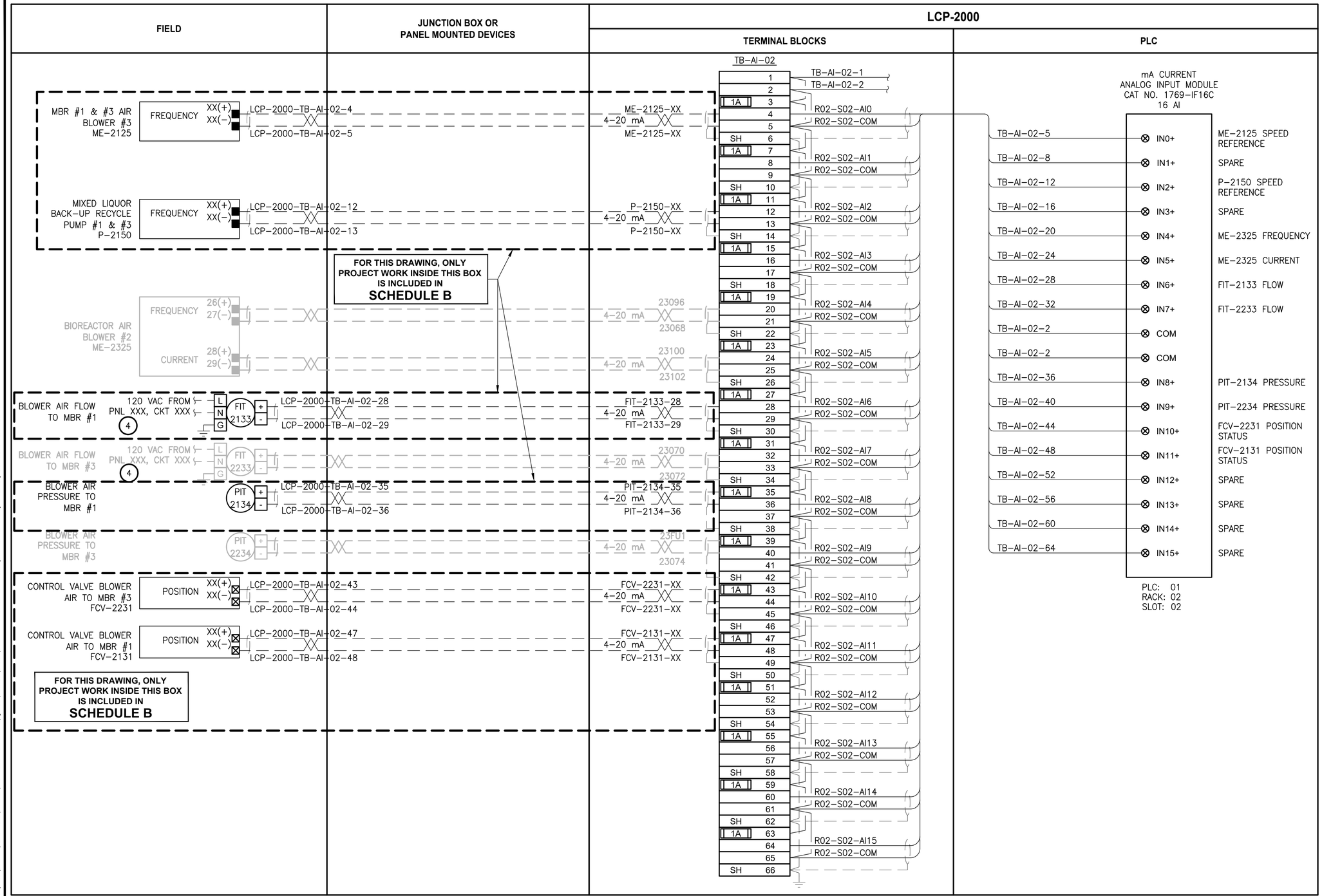

NOTES:

1. 4–20mA SHIELD SHALL BE GROUNDED IN ONLY ONE LOCATION, AT THE PLC CONTROL PANEL GROUND BUS BAR.
2. 4–20mA SHIELD SHALL BE CUT BACK AND HEAT SHRINK APPLIED.
3. CONTRACTOR TO COORDINATE ACTUAL WIRE NUMBERS BASED ON TERMINAL NUMBERS ON EQUIPMENT PROVIDED.

(4) CONTRACTOR TO COORDINATE POWER SOURCE FOR FIELD INSTRUMENTATION.

ALL PROJECT WORK OUTSIDE THE BOX NOTED FOR SCHEDULE B, SHALL BE SCHEDULE A

LEGEND:

- WIRING INTERNAL TO PANEL
- FIELD WIRING
- [??] DEVICE TERMINAL
- ??? FEED–THROUGH TERMINAL IN PANEL
- SH ??? SHIELD TERMINAL IN PANEL
- ⏚ ??? GROUND TERMINAL IN PANEL
- ?A ??? FUSE TERMINAL IN PANEL
- ?A ??? CIRCUIT BREAKER TERMINAL IN PANEL
- NC / CR??? C / NO RELAY TERMINAL IN PANEL

PATH: U:\PSO\Projects\Clients\1598–Tulalip Tribes\216–1598–102 MBR Upgrade\99Svcs\CADD\DWG PLOTTED BY: vondejm DATE: Friday, February 23, 2018 10:01:02 AM LAYOUT: I217

REVISIONS	DATE	BY

DESIGNED D. MILES
DRAWN D. MILES
CHECKED J. MURPHY
APPROVED B. BUNKER

ONE INCH AT FULL SCALE. IF NOT, SCALE ACCORDINGLY
FILE NAME PS1598102-I217
JOB No. 216-1598-102
DATE FEBRUARY 2018

ARTHUR G. STOKES — STATE OF WASHINGTON — 34736 — REGISTERED PROFESSIONAL ENGINEER
FEBRUARY 23, 2018

Parametrix
ENGINEERING . PLANNING . ENVIRONMENTAL SCIENCES
1019 39TH AVENUE SE, SUITE 100 | PUYALLUP, WA 98374
P 253.604.6600
WWW.PARAMETRIX.COM

PROJECT NAME
THE CONSOLIDATED BOROUGH OF QUIL CEDA VILLAGE
MBR TREATMENT FACILITY UPGRADE
TULALIP, WASHINGTON

LCP-2000
PLC 1, RACK 2, SLOT 2
ANALOG INPUTS

DRAWING NO. 110 OF 157

I217

LCP-2000

PLC

mA CURRENT
ANALOG OUTPUT MODULE
CAT NO. 1769-OF8C
8 AO

ME-2125 SPEED SETPOINT	ANLG COM	TB-AO-02-3
	I OUT 0+	TB-AO-02-4
P-2150 SPEED SETPOINT	ANLG COM	TB-AO-02-7
	I OUT 1+	TB-AO-02-6
ME-2325 SPEED SETPOINT	ANLG COM	TB-AO-02-10
	I OUT 2+	TB-AO-02-9
FCV-2231 FLOW SETPOINT	ANLG COM	TB-AO-02-13
	I OUT 3+	TB-AO-02-12
FCV-2131 FLOW SETPOINT	ANLG COM	TB-AO-02-16
	I OUT 4+	TB-AO-02-15
SPARE	ANLG COM	TB-AO-02-19
	I OUT 5+	TB-AO-02-18
SPARE	ANLG COM	TB-AO-02-22
	I OUT 6+	TB-AO-02-21
SPARE	ANLG COM	TB-AO-02-25
	I OUT 7+	TB-AO-02-24
	DC NEUT	TB-AO-02-2
	+24V DC	TB-AO-02-1

PLC: 01
RACK: 02
SLOT: 03

TERMINAL BLOCKS

TB-PS2-FU27
TB-PS2-25

TB-AO-02

R03-S02-24V		1
R03-S02-COM		2
R03-S02-AO0		3
R03-S02-COM		4
	SH	5
R03-S02-AO1		6
R03-S02-COM		7
	SH	8
R03-S02-AO2		9
R03-S02-COM		10
	SH	11
R03-S02-AO3		12
R03-S02-COM		13
	SH	14
R03-S02-AO4		15
R03-S02-COM		16
	SH	17
R03-S02-AO5		18
R03-S02-COM		19
	SH	20
R03-S02-AO6		21
R03-S02-COM		22
	SH	23
R03-S02-AO7		24
R03-S02-COM		25
	SH	26

JUNCTION BOX OR PANEL MOUNTED DEVICES

LCP-2000-TB-AO-02-3	4-20 mA	LCP-2000-TB-AO-02-3
P-2150-XX	4-20 mA	P-2150-XX
24050	4-20 mA	24052
FCV-2231-XX	4-20 mA	FCV-2231-XX
FCV-2131-XX	4-20 mA	FCV-2131-XX

FIELD

FOR THIS DRAWING, ONLY PROJECT WORK INSIDE THIS BOX IS INCLUDED IN **SCHEDULE B**

ME-2125-XX	XX(+) XX(-)	SPEED SETPOINT	MBR #1 & #3 AIR BLOWER #1 ME-2125
LCP-2000-TB-AO-02-6	XX(+) XX(-)	SPEED SETPOINT	MIXED LIQUOR BACKUP RECYCLE PUMP #1 & #3 P-2150
LCP-2000-TB-AO-02-7	XX(+) XX(-)	SPEED SETPOINT	BIOREACTOR AIR BLOWER #2 ME-2325
LCP-2000-TB-AO-02-6	XX(+) XX(-)	FLOW SETPOINT	CONTROL VALVE BLOWER AIR TO MBR #3 FCV-2231
LCP-2000-TB-AO-02-7	XX(+) XX(-)	FLOW SETPOINT	CONTROL VALVE BLOWER AIR TO MBR #1 FCV-2131

FOR THIS DRAWING, ONLY PROJECT WORK INSIDE THIS BOX IS INCLUDED IN **SCHEDULE B**

ALL PROJECT WORK OUTSIDE THE BOX NOTED FOR SCHEDULE B, SHALL BE **SCHEDULE A**

NOTES:

1. 4-20mA SHIELD SHALL BE GROUNDED IN ONLY ONE LOCATION, AT THE PLC CONTROL PANEL GROUND BUS BAR.
2. 4-20mA SHIELD SHALL BE CUT BACK AND HEAT SHRINK APPLIED.
3. CONTRACTOR TO COORDINATE ACTUAL WIRE NUMBERS BASED ON TERMINAL NUMBERS ON EQUIPMENT PROVIDED.

LEGEND:

- WIRING INTERNAL TO PANEL
- FIELD WIRING
- [??] DEVICE TERMINAL
- [???] FEED-THROUGH TERMINAL IN PANEL
- [SH ???] SHIELD TERMINAL IN PANEL
- [⏚ ???] GROUND TERMINAL IN PANEL
- [?A ???] FUSE TERMINAL IN PANEL
- [?A ↷ ???] CIRCUIT BREAKER TERMINAL IN PANEL
- [NC / CR??? C / NO] RELAY TERMINAL IN PANEL

PATH: U:\PSO\Projects\Clients\1598-TulalipTribes\216-1598-102 MBR Upgrade\99Svcs\CADD\DWG
LAYOUT: I218
PLOTTED BY: vondejam DATE: Wednesday, February 21, 2018 3:59:54 PM

	REVISIONS	DATE	BY

DESIGNED D. MILES
DRAWN D. MILES
CHECKED J. MURPHY
APPROVED B. BUNKER

ONE INCH AT FULL SCALE. IF NOT, SCALE ACCORDINGLY
FILE NAME PS1598102-I218
JOB No. 216-1598-102
DATE FEBRUARY 2018

ARTHUR G. STOKES — STATE OF WASHINGTON — 34736 — REGISTERED PROFESSIONAL ENGINEER
FEBRUARY 23, 2018

Parametrix
ENGINEERING . PLANNING . ENVIRONMENTAL SCIENCES
1019 39TH AVENUE SE, SUITE 100 | PUYALLUP, WA 98374
P 253.604.6600
WWW.PARAMETRIX.COM

PROJECT NAME
THE CONSOLIDATED BOROUGH OF QUIL CEDA VILLAGE
MBR TREATMENT FACILITY UPGRADE
TULALIP, WASHINGTON

LCP-2000
PLC 1, RACK 2, SLOT 3
ANALOG OUTPUTS

DRAWING NO. 111 OF 157
I218

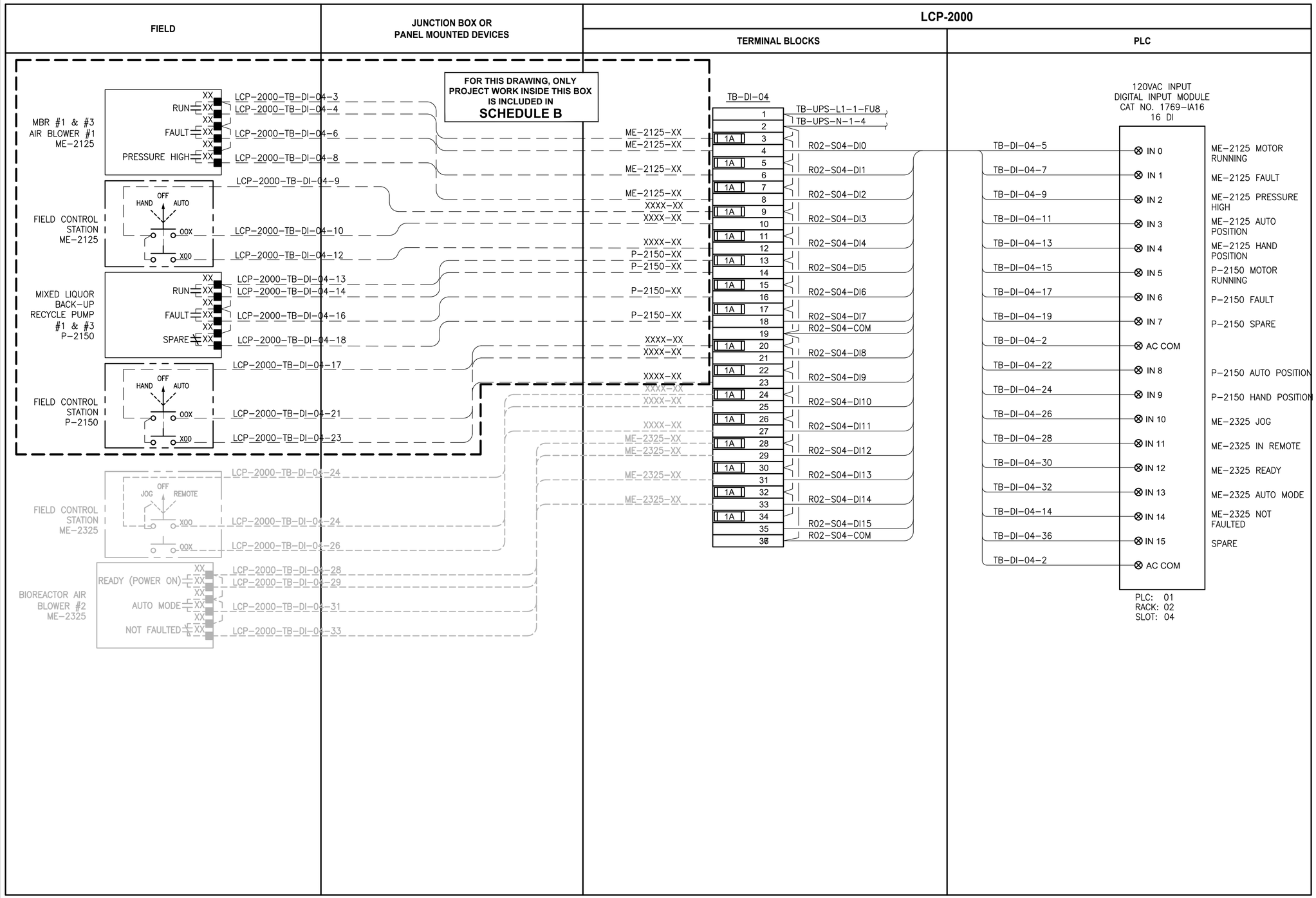

NOTES:

ALL PROJECT WORK OUTSIDE THE BOX NOTED FOR SCHEDULE B, SHALL BE **SCHEDULE A**

LEGEND:

- WIRING INTERNAL TO PANEL
- FIELD WIRING
- ?? DEVICE TERMINAL
- ??? FEED-THROUGH TERMINAL IN PANEL
- SH ??? SHIELD TERMINAL IN PANEL
- ??? GROUND TERMINAL IN PANEL
- ?A ??? FUSE TERMINAL IN PANEL
- ?A ??? CIRCUIT BREAKER TERMINAL IN PANEL
- NC CR??? C NO RELAY TERMINAL IN PANEL

REVISIONS	DATE	BY

DESIGNED D. MILES
DRAWN D. MILES
CHECKED J. MURPHY
APPROVED B. BUNKER

ONE INCH AT FULL SCALE. IF NOT, SCALE ACCORDINGLY
FILE NAME PS1598102-I219
JOB No. 216-1598-102
DATE FEBRUARY 2018

ARTHUR G. STOKES STATE OF WASHINGTON 34736 REGISTERED PROFESSIONAL ENGINEER
FEBRUARY 23, 2018

Parametrix
ENGINEERING . PLANNING . ENVIRONMENTAL SCIENCES
1019 39TH AVENUE SE, SUITE 100 | PUYALLUP, WA 98374
P 253.604.6600
WWW.PARAMETRIX.COM

PROJECT NAME
THE CONSOLIDATED BOROUGH OF QUIL CEDA VILLAGE
MBR TREATMENT FACILITY UPGRADE
TULALIP, WASHINGTON

LCP-2000
PLC 1, RACK 2, SLOT 4
DISCRETE INPUTS

DRAWING NO. 112 OF 157
I219

LAYOUT: I219 PATH: U:\PSO\Projects\Clients\1598-TulalipTribes\216-1598-102 MBR Upgrade\99Svcs\CADD\DWG PLOTTED BY: vondejam DATE: Wednesday, February 21, 2018 4:04:00 PM

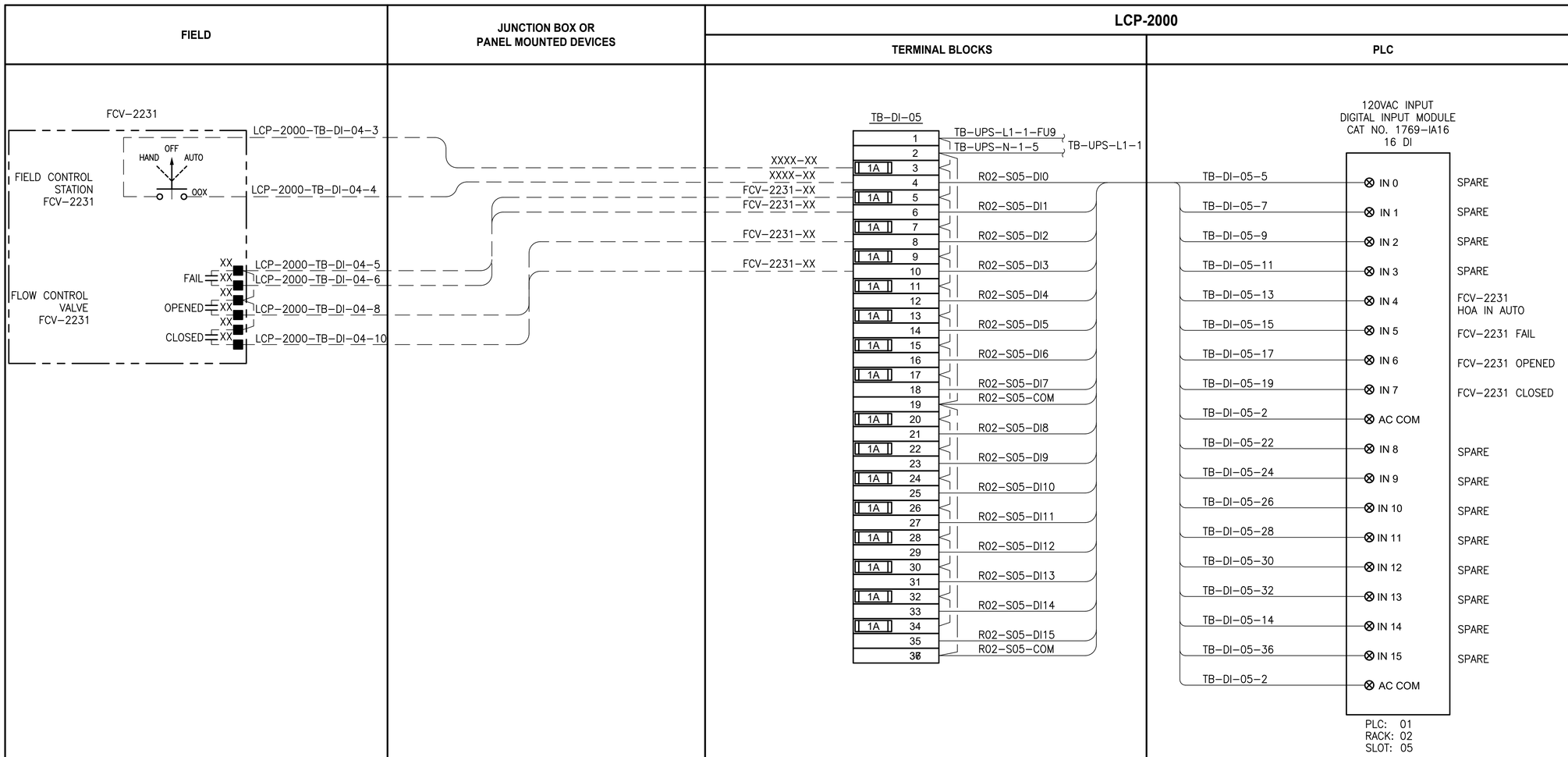

NOTES:

PROJECT WORK SHOWN ON THIS DRAWING IS ALL INCLUDED IN **SCHEDULE A**

LEGEND:

- WIRING INTERNAL TO PANEL
- FIELD WIRING
- ?? — DEVICE TERMINAL
- ??? — FEED-THROUGH TERMINAL IN PANEL
- SH ??? — SHIELD TERMINAL IN PANEL
- ⏚ ??? — GROUND TERMINAL IN PANEL
- ?A ??? — FUSE TERMINAL IN PANEL
- ?A ↷ ??? — CIRCUIT BREAKER TERMINAL IN PANEL
- NC / CR??? C / NO — RELAY TERMINAL IN PANEL

	REVISIONS	DATE	BY

DESIGNED J. VONDERAHE
DRAWN J. VONDERAHE
CHECKED J. MURPHY
APPROVED B. BUNKER

ONE INCH AT FULL SCALE. IF NOT, SCALE ACCORDINGLY

FILE NAME PS1598102-I220
JOB No. 216-1598-102
DATE FEBRUARY 2018

ARTHUR G. STOKES — STATE OF WASHINGTON — 34736 — REGISTERED PROFESSIONAL ENGINEER

FEBRUARY 23, 2018

Parametrix
ENGINEERING . PLANNING . ENVIRONMENTAL SCIENCES
1019 39TH AVENUE SE, SUITE 100 | PUYALLUP, WA 98374
P 253.604.6600
WWW.PARAMETRIX.COM

PROJECT NAME
THE CONSOLIDATED BOROUGH OF QUIL CEDA VILLAGE
MBR TREATMENT FACILITY UPGRADE
TULALIP, WASHINGTON

LCP-2000
PLC 1, RACK 2, SLOT 5
DISCRETE INPUTS

DRAWING NO. 113 OF 157

I220

PATH: U:\PSO\Projects\Clients\1598-TulalipTribes\216-1598-102 MBR Upgrade\99Svcs\CADD\DWG PLOTTED BY: vondejam DATE: Friday, February 23, 2018 10:02:59 AM LAYOUT: I220

FIELD	JUNCTION BOX OR PANEL MOUNTED DEVICES	LCP-2000	
		TERMINAL BLOCKS	PLC

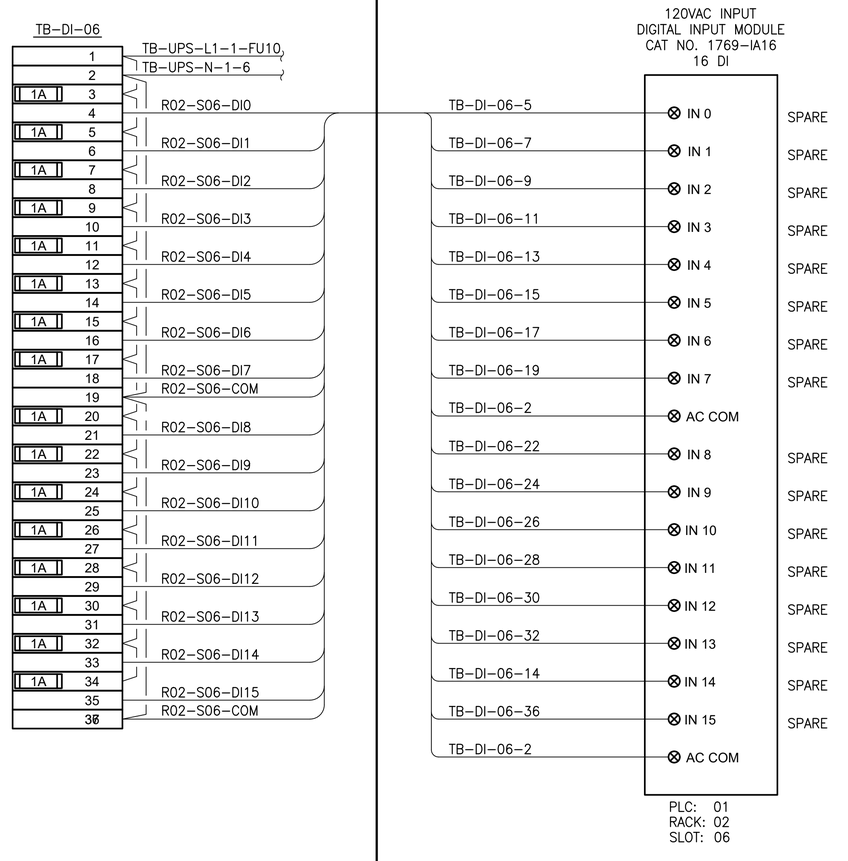

NOTES:

ALL PROJECT WORK OUTSIDE THE BOX NOTED FOR SCHEDULE B, SHALL BE **SCHEDULE A**

LEGEND:

- WIRING INTERNAL TO PANEL
- FIELD WIRING
- [??] DEVICE TERMINAL
- [???] FEED-THROUGH TERMINAL IN PANEL
- [SH ???] SHIELD TERMINAL IN PANEL
- [⏚ ???] GROUND TERMINAL IN PANEL
- [?A ???] FUSE TERMINAL IN PANEL
- [?A ↷ ???] CIRCUIT BREAKER TERMINAL IN PANEL
- RELAY TERMINAL IN PANEL (NC / CR??? C / NO)

PATH: U:\PSO\Projects\Clients\1598-TulalipTribes\216-1598-102 MBR Upgrade\99Svcs\CADD\DWG PLOTTED BY: vondejpm DATE: Friday, February 23, 2018 10:03:54 AM
LAYOUT: I221

	REVISIONS	DATE	BY

DESIGNED D. MILES
DRAWN D. MILES
CHECKED J. MURPHY
APPROVED B. BUNKER

ONE INCH AT FULL SCALE. IF NOT, SCALE ACCORDINGLY

FILE NAME PS1598102-I221
JOB No. 216-1598-102
DATE FEBRUARY 2018

ARTHUR G. STOKES — STATE OF WASHINGTON — 34738 — REGISTERED PROFESSIONAL ENGINEER

FEBRUARY 23, 2018

Parametrix
ENGINEERING . PLANNING . ENVIRONMENTAL SCIENCES
1019 39TH AVENUE SE, SUITE 100 | PUYALLUP, WA 98374
P 253.604.6600
WWW.PARAMETRIX.COM

PROJECT NAME
THE CONSOLIDATED BOROUGH OF QUIL CEDA VILLAGE
MBR TREATMENT FACILITY UPGRADE
TULALIP, WASHINGTON

LCP-2000
PLC 1, RACK 2, SLOT 6
DISCRETE INPUTS

DRAWING NO. 114 OF 157

I221

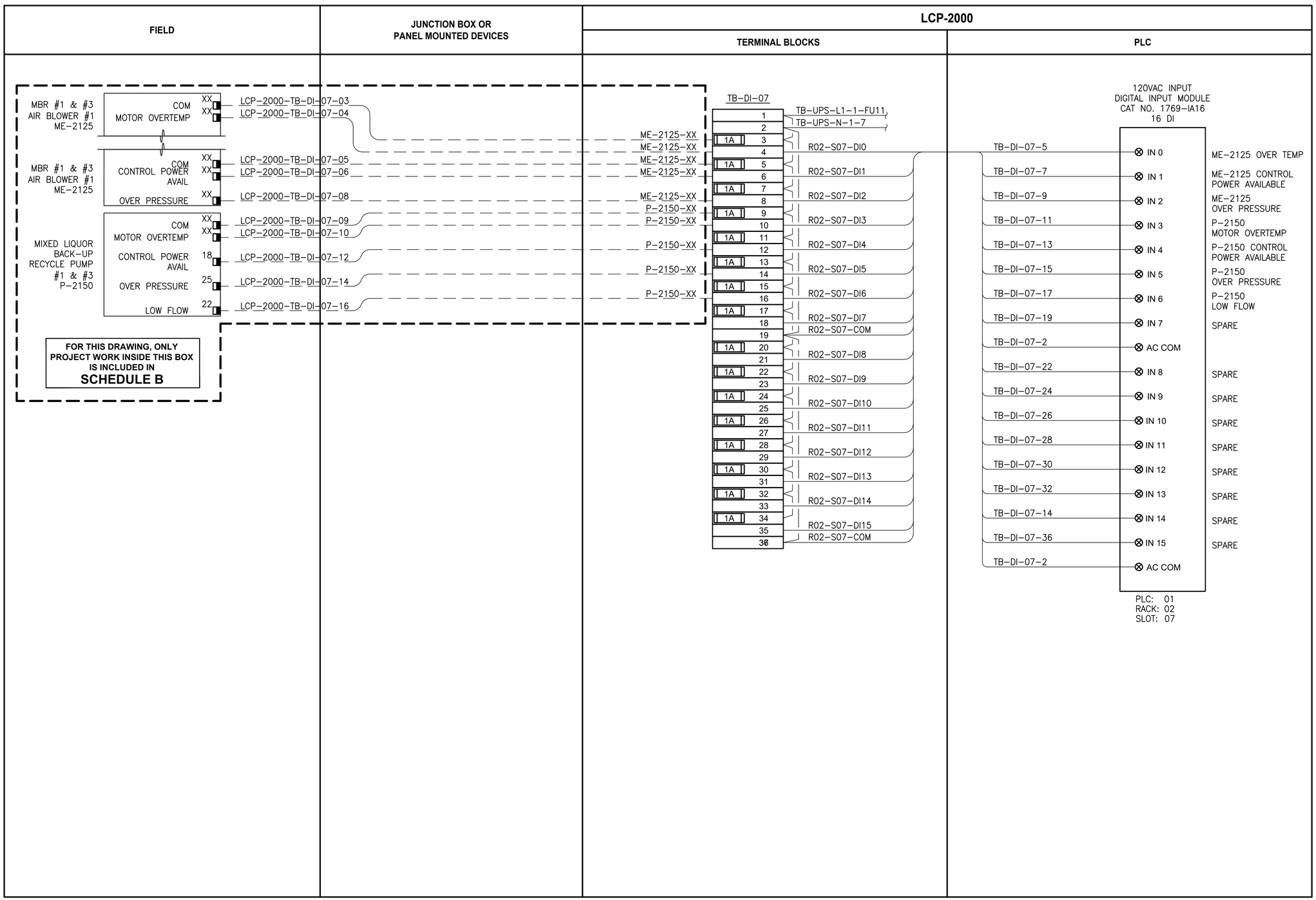

NOTES:

ALL PROJECT WORK OUTSIDE THE BOX NOTED FOR SCHEDULE B, SHALL BE **SCHEDULE A**

LEGEND:

- WIRING INTERNAL TO PANEL
- FIELD WIRING
- ?? — DEVICE TERMINAL
- ??? — FEED-THROUGH TERMINAL IN PANEL
- SH ??? — SHIELD TERMINAL IN PANEL
- ??? — GROUND TERMINAL IN PANEL
- ?A ??? — FUSE TERMINAL IN PANEL
- ?A ??? — CIRCUIT BREAKER TERMINAL IN PANEL
- NC / CR??? C / NO — RELAY TERMINAL IN PANEL

REVISIONS	DATE	BY

DESIGNED D. MILES
DRAWN D. MILES
CHECKED J. MURPHY
APPROVED B. BUNKER

ONE INCH AT FULL SCALE. IF NOT, SCALE ACCORDINGLY

FILE NAME PS1598102-I222
JOB No. 216-1598-102
DATE FEBRUARY 2018

ARTHUR G. STOKES — STATE OF WASHINGTON — 34736 — REGISTERED PROFESSIONAL ENGINEER

FEBRUARY 23, 2018

Parametrix
ENGINEERING . PLANNING . ENVIRONMENTAL SCIENCES
1019 39TH AVENUE SE, SUITE 100 | PUYALLUP, WA 98374
P 253.604.6600
WWW.PARAMETRIX.COM

PROJECT NAME
THE CONSOLIDATED BOROUGH OF QUIL CEDA VILLAGE
MBR TREATMENT FACILITY UPGRADE
TULALIP, WASHINGTON

LCP-2000
PLC 1, RACK 2, SLOT 7
DISCRETE INPUTS

DRAWING NO. 115 OF 157

I222

PATH: U:\PSO\Projects\Clients\1598-TulalipTribes\216-1598-102 MBR Upgrade\999vca\CADD\DWG PLOTTED BY: vondejorn DATE: Friday, February 23, 2018 8:27:07 AM
LAYOUT: I222

LCP-2000

PLC

24VDC
OUTPUT MODULE
CAT NO. 1769-OB16
16 DO

	+VDC	TB-PS2-FU21
SPARE	OUT 0	TB-DO-05-R0
ME-2200 AUTO CALL	OUT 1	TB-DO-05-R1
P-2350 FAULT RESET	OUT 2	TB-DO-05-R2
P-2350 CALL	OUT 3	TB-DO-05-R3
ME-2400 FAULT RESET	OUT 4	TB-DO-05-R4
ME-2400 CALL	OUT 5	TB-DO-05-R5
SPARE	OUT 6	TB-DO-05-R6
SPARE	OUT 7	TB-DO-05-R7
SPARE	OUT 8	TB-DO-05-R8
SPARE	OUT 9	TB-DO-05-R9
SPARE	OUT 10	TB-DO-05-R10
SPARE	OUT 11	TB-DO-05-R11
SPARE	OUT 12	TB-DO-05-R12
SPARE	OUT 13	TB-DO-05-R13
SPARE	OUT 14	TB-DO-05-R14
SPARE	OUT 15	TB-DO-05-R15
	DC COM	TB-PS2-19

PLC: 01
RACK: 03
SLOT: 00

TERMINAL BLOCKS

TB-PS2-FU21
TB-PS2-19

TB-DO-05

	1	R03-S00-24V
	2	R03-S00-COM
R0	NC C NO	R03-S00-DO0
R1	NC C NO	R03-S00-DO1
R2	NC C NO	R03-S00-DO2
R3	NC C NO	R03-S00-DO3
R4	NC C NO	R03-S00-DO4
R5	NC C NO	R03-S00-DO5
R6	NC C NO	R03-S00-DO6
R7	NC C NO	R03-S00-DO7
R8	NC C NO	R03-S00-DO8
R9	NC C NO	R03-S00-DO9
R10	NC C NO	R03-S00-DO10
R11	NC C NO	R03-S00-DO11
R12	NC C NO	R03-S00-DO12
R13	NC C NO	R03-S00-DO13
R14	NC C NO	R03-S00-DO14
R15	NC C NO	R03-S00-DO15

JUNCTION BOX OR PANEL MOUNTED DEVICES

ME-2200-XX
ME-2200-X

FIELD

FOR THIS DRAWING, ONLY PROJECT WORK INSIDE THIS BOX IS INCLUDED IN **SCHEDULE B**

LCP-2000-TB-DO-05-R0-11 → XX (+) XX RUN — MBR #1 & #3 AIR BLOWER #3 ME-2200

LCP-2000-TB-DO-05-R1-14 →

22074 → 2
22076 → 1
(+) FAULT RESET
MIXED LIQUOR BACK-UP RECYCLE PUMP #2 & #4 P-2350

22078 → 3 RUN

22094 → 2
22096 → 1
(+) FAULT RESET
BIOREACTOR AIR BLOWER #4 ME-2400

22098 → 3 RUN

NOTES:

1. CONTRACTOR TO COORDINATE ACTUAL TERMINAL NUMBER FOR WIRE TAGS BASED ON EQUIPMENT PROVIDED.

ALL PROJECT WORK OUTSIDE THE BOX NOTED FOR SCHEDULE B, SHALL BE SCHEDULE A

LEGEND:

- WIRING INTERNAL TO PANEL
- FIELD WIRING
- [??] DEVICE TERMINAL
- ??? FEED-THROUGH TERMINAL IN PANEL
- SH ??? SHIELD TERMINAL IN PANEL
- ⏚ ??? GROUND TERMINAL IN PANEL
- ?A ??? FUSE TERMINAL IN PANEL
- ?A ↷ ??? CIRCUIT BREAKER TERMINAL IN PANEL
- NC / CR??? C / NO — RELAY TERMINAL IN PANEL

PATH: U:\PSO\Projects\Clients\1598-TulalipTribes\216-1598-102 MBR Upgrade\99Svcs\CADD\DWG
PLOTTED BY: vondejpm DATE: Wednesday, February 21, 2018 4:08:15 PM
LAYOUT: I223

	REVISIONS	DATE	BY

DESIGNED D. MILES
DRAWN D. MILES
CHECKED J. MURPHY
APPROVED B. BUNKER

ONE INCH AT FULL SCALE.
IF NOT, SCALE ACCORDINGLY
FILE NAME PS1598102-I223
JOB No. 216-1598-102
DATE FEBRUARY 2018

ARTHUR G. STOKES — STATE OF WASHINGTON — 34736 — REGISTERED PROFESSIONAL ENGINEER
FEBRUARY 23, 2018

Parametrix
ENGINEERING . PLANNING . ENVIRONMENTAL SCIENCES
1019 39TH AVENUE SE, SUITE 100 | PUYALLUP, WA 98374
P 253.604.6600
WWW.PARAMETRIX.COM

PROJECT NAME
THE CONSOLIDATED BOROUGH OF QUIL CEDA VILLAGE
MBR TREATMENT FACILITY UPGRADE
TULALIP, WASHINGTON

LCP-2000
PLC 1, RACK 3, SLOT 0
DISCRETE OUTPUTS

DRAWING NO. 116 OF 157
I223

LCP-2000		JUNCTION BOX OR PANEL MOUNTED DEVICES	FIELD
PLC	TERMINAL BLOCKS		

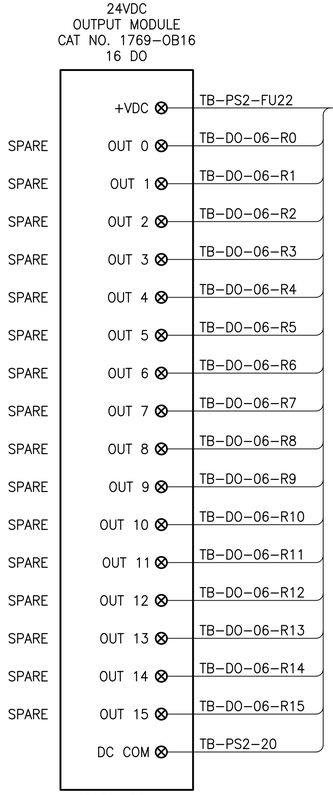

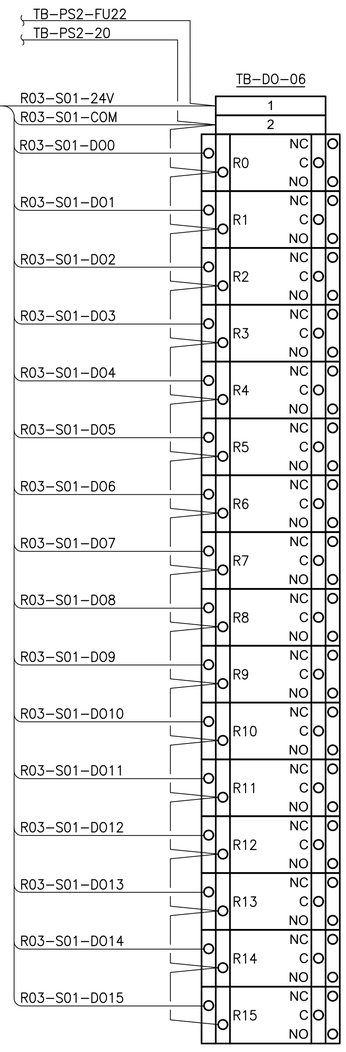

NOTES:

1. CONTRACTOR TO COORDINATE ACTUAL TERMINAL NUMBER FOR WIRE TAGS BASED ON EQUIPMENT PROVIDED.

PROJECT WORK SHOWN ON THIS DRAWING IS ALL INCLUDED IN SCHEDULE A

LEGEND:

- WIRING INTERNAL TO PANEL
- FIELD WIRING
- [??] DEVICE TERMINAL
- [???] FEED-THROUGH TERMINAL IN PANEL
- [SH ???] SHIELD TERMINAL IN PANEL
- [⏚ ???] GROUND TERMINAL IN PANEL
- [?A ???] FUSE TERMINAL IN PANEL
- [?A ↷ ???] CIRCUIT BREAKER TERMINAL IN PANEL
- [NC / CR??? C / NO] RELAY TERMINAL IN PANEL

▷	REVISIONS	DATE	BY

DESIGNED D. MILES
DRAWN D. MILES
CHECKED J. MURPHY
APPROVED B. BUNKER

ONE INCH AT FULL SCALE. IF NOT, SCALE ACCORDINGLY

FILE NAME PS1598102-I224
JOB No. 216-1598-102
DATE FEBRUARY 2018

ARTHUR G. STOKES — STATE OF WASHINGTON — 34736 — REGISTERED PROFESSIONAL ENGINEER

FEBRUARY 23, 2018

Parametrix
ENGINEERING . PLANNING . ENVIRONMENTAL SCIENCES
1019 39TH AVENUE SE, SUITE 100 | PUYALLUP, WA 98374
P 253.604.6600
WWW.PARAMETRIX.COM

PROJECT NAME
THE CONSOLIDATED BOROUGH OF QUIL CEDA VILLAGE
MBR TREATMENT FACILITY UPGRADE
TULALIP, WASHINGTON

LCP-2000
PLC 1, RACK 3, SLOT 1
DISCRETE OUTPUTS

DRAWING NO. 117 OF 157

I224

PATH: U:\PSO\Projects\Clients\1598-Tulalip Tribes\216-1598-102 MBR Upgrade\99Svcs\CADD\DWG PLOTTED BY: vondejpm DATE: Wednesday, February 21, 2018 4:10:06 PM LAYOUT: I224

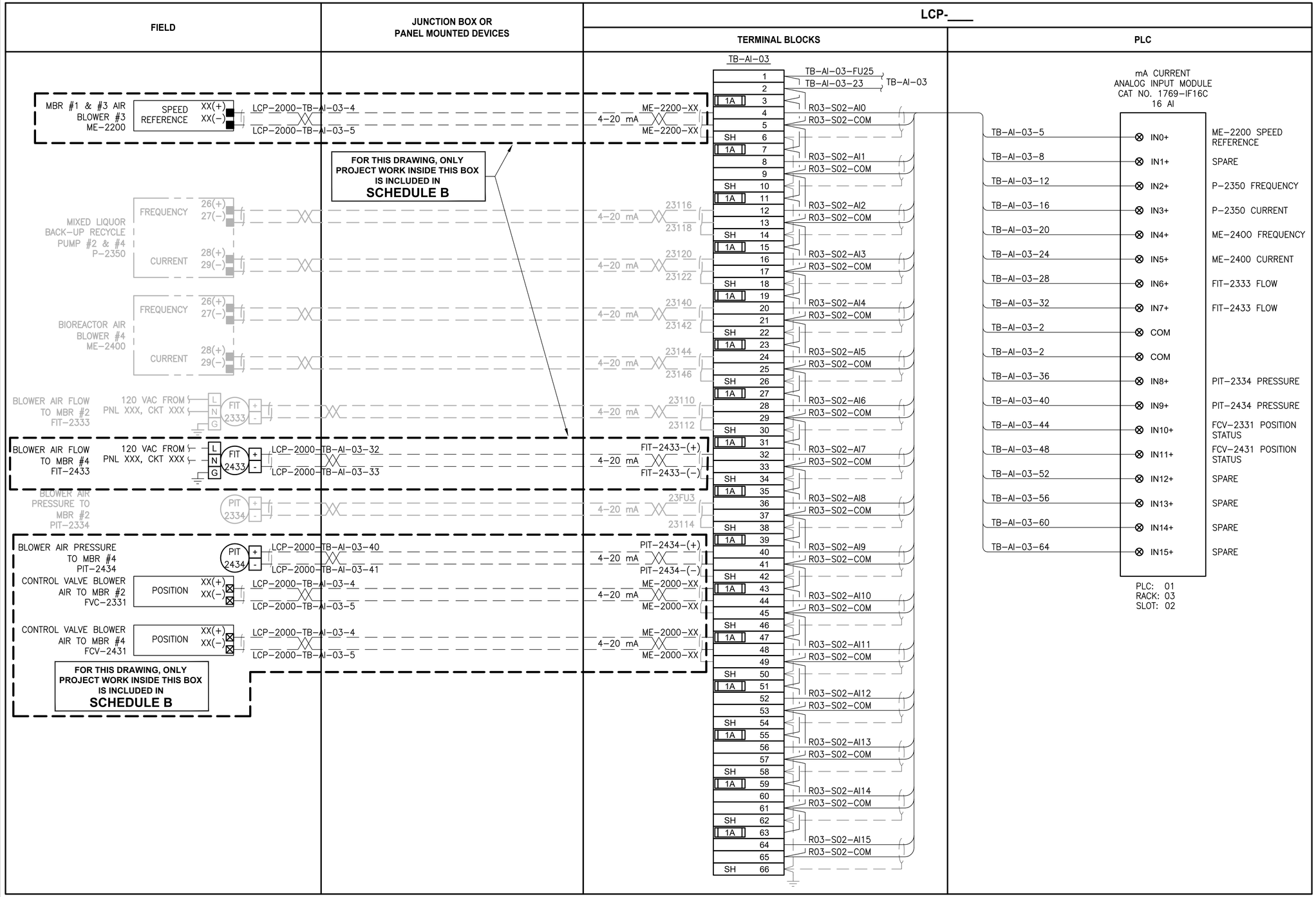

NOTES:

1. 4-20mA SHIELD SHALL BE GROUNDED IN ONLY ONE LOCATION, AT THE PLC CONTROL PANEL GROUND BUS BAR.
2. 4-20mA SHIELD SHALL BE CUT BACK AND HEAT SHRINK APPLIED.

ALL PROJECT WORK OUTSIDE THE BOX NOTED FOR SCHEDULE B, SHALL BE SCHEDULE A

LEGEND:

- WIRING INTERNAL TO PANEL
- FIELD WIRING
- [??] DEVICE TERMINAL
- [???] FEED-THROUGH TERMINAL IN PANEL
- SH [???] SHIELD TERMINAL IN PANEL
- [???] GROUND TERMINAL IN PANEL
- [?A] [???] FUSE TERMINAL IN PANEL
- ?A [???] CIRCUIT BREAKER TERMINAL IN PANEL
- NC / CR??? C / NO RELAY TERMINAL IN PANEL

	REVISIONS	DATE	BY

DESIGNED D. MILES
DRAWN D. MILES
CHECKED J. MURPHY
APPROVED B. BUNKER

ONE INCH AT FULL SCALE. IF NOT, SCALE ACCORDINGLY

FILE NAME PS1598102-I225
JOB No. 216-1598-102
DATE FEBRUARY 2018

ARTHUR G. STOKES — STATE OF WASHINGTON — 34736 — REGISTERED PROFESSIONAL ENGINEER

FEBRUARY 23, 2018

Parametrix
ENGINEERING . PLANNING . ENVIRONMENTAL SCIENCES
1019 39TH AVENUE SE, SUITE 100 | PUYALLUP, WA 98374
P 253.604.6600
WWW.PARAMETRIX.COM

PROJECT NAME
THE CONSOLIDATED BOROUGH OF QUIL CEDA VILLAGE
MBR TREATMENT FACILITY UPGRADE
TULALIP, WASHINGTON

LCP-2000
PLC 1, RACK 3, SLOT 2
ANALOG INPUTS

DRAWING NO. 118 OF 157

I225

PATH: U:\PSO\Projects\Clients\1598-Tulalip Tribes\216-1598-102 MBR Upgrade\99Svcs\CADD\DWG PLOTTED BY: vondejpm DATE: Wednesday, February 21, 2018 4:20:06 PM
LAYOUT: I225

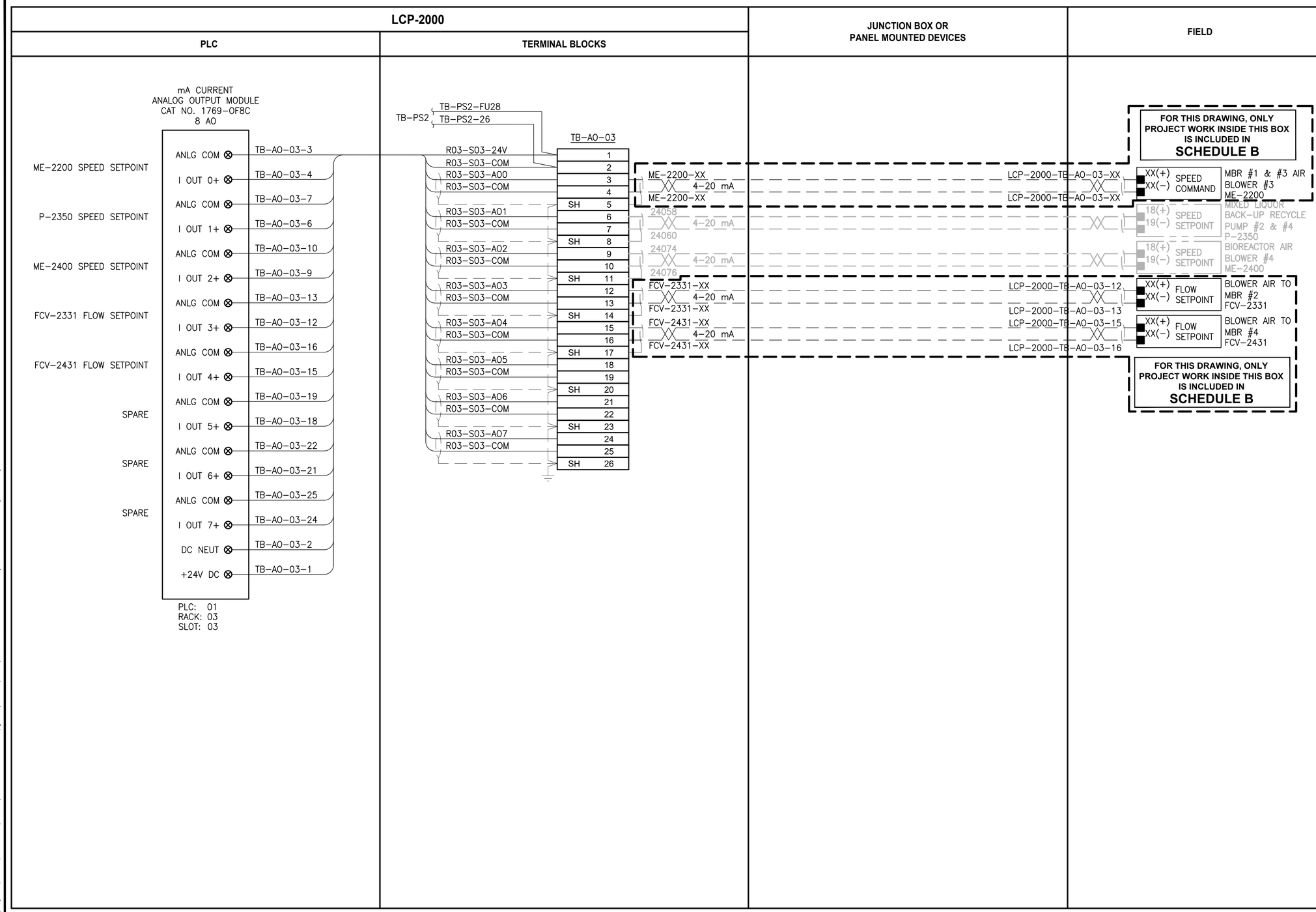

NOTES:

1. 4-20mA SHIELD SHALL BE GROUNDED IN ONLY ONE LOCATION, AT THE PLC CONTROL PANEL GROUND BUS BAR.
2. 4-20mA SHIELD SHALL BE CUT BACK AND HEAT SHRINK APPLIED.

ALL PROJECT WORK OUTSIDE THE BOX NOTED FOR SCHEDULE B, SHALL BE SCHEDULE A

LEGEND:

- WIRING INTERNAL TO PANEL
- FIELD WIRING
- [??] DEVICE TERMINAL
- [???] FEED-THROUGH TERMINAL IN PANEL
- [SH ???] SHIELD TERMINAL IN PANEL
- [⏚ ???] GROUND TERMINAL IN PANEL
- [?A ???] FUSE TERMINAL IN PANEL
- [?A ↷ ???] CIRCUIT BREAKER TERMINAL IN PANEL
- [NC / CR??? C / NO] RELAY TERMINAL IN PANEL

PATH: U:\PSO\Projects\Clients\1598-TulalipTribes\216-1598-102 MBR Upgrade\99Svcs\CADD\DWG PLOTTED BY: vondejpm DATE: Wednesday, February 21, 2018 4:25:23 PM LAYOUT: I226

	REVISIONS	DATE	BY

DESIGNED D. MILES
DRAWN D. MILES
CHECKED J. MURPHY
APPROVED B. BUNKER

ONE INCH AT FULL SCALE. IF NOT, SCALE ACCORDINGLY
FILE NAME PS1598102-I226
JOB No. 216-1598-102
DATE FEBRUARY 2018

ARTHUR G. STOKES STATE OF WASHINGTON 34736 REGISTERED PROFESSIONAL ENGINEER
FEBRUARY 23, 2018

Parametrix
ENGINEERING . PLANNING . ENVIRONMENTAL SCIENCES
1019 39TH AVENUE SE, SUITE 100 | PUYALLUP, WA 98374
P 253.604.6600
WWW.PARAMETRIX.COM

PROJECT NAME
THE CONSOLIDATED BOROUGH OF QUIL CEDA VILLAGE
MBR TREATMENT FACILITY UPGRADE
TULALIP, WASHINGTON

LCP-2000
PLC 1, RACK 3, SLOT 3
ANALOG OUTPUTS

DRAWING NO. 119 OF 157

I226

FOR THIS DRAWING, ONLY PROJECT WORK INSIDE THIS BOX IS INCLUDED IN **SCHEDULE B**

MBR #1 & #3 AIR BLOWER #3 ME-2200

XX RUN XX FAULT XX PRESSURE HIGH XX

LCP-2000-TB-DI-08-3
LCP-2000-TB-DI-08-4
LCP-2000-TB-DI-08-6
LCP-2000-TB-DI-08-8

FIELD CONTROL STATION ME-2200

OFF / HAND / AUTO; 00X; X00

LCP-2000-TB-DI-08-9
LCP-2000-TB-DI-08-10
LCP-2000-TB-DI-08-12

FIELD CONTROL STATION P-2350

OFF / JOG / REMOTE; X00; 00X

MIXED LIQUOR BACK-UP RECYCLE PUMP #2 & #4 P-2350

9 READY (POWER ON) 10
12 AUTO MODE 13
14 NOT FAULTED 15

FIELD CONTROL STATION ME-2400

OFF / JOG / REMOTE; X00; 00X

BIOREACTOR AIR BLOWER #4 ME-2400

9 READY (POWER ON) 10
12 AUTO MODE 13
14 NOT FAULTED 15

TB-DI-08

1	TB-UPS-L1-1-FU12,	
2	TB-UPS-N-1-8	
3	ME-2200-XX	
4	ME-2200-XX	
5	ME-2200-XX	
6		
7	ME-2200-XX	
8	XX-XXXX-XX	
9	XX-XXXX-XX	
10		
11	XX-XXXX-XX	
12		
13	21FU21	
14	21226	
15		
16	21228	
17	21FU22	
18	21230	
19		
20	21232	
21		
22	21234	
23	21FU25	
24	21252	
25		
26	21254	
27	21FU26	
28	21256	
29		
30	21258	
31		
32	21260	
33		
34		
35		
36		

1A 3	R03-S04-DI0
1A 5	R03-S04-DI1
1A 7	R03-S04-DI2
1A 9	R03-S04-DI3
1A 11	R03-S04-DI4
1A 13	R03-S04-DI5
1A 15	R03-S04-DI6
1A 17	R03-S04-DI7
	R03-S04-COM
1A 20	R03-S04-DI8
1A 22	R03-S04-DI9
1A 24	R03-S04-DI10
1A 26	R03-S04-DI11
1A 28	R03-S04-DI12
1A 30	R03-S04-DI13
1A 32	R03-S04-DI14
1A 34	R03-S04-DI15
35	R03-S04-COM
36	

120VAC INPUT DIGITAL INPUT MODULE CAT NO. 1769-IA16 16 DI

TB-DI-08-5	IN 0	ME-2200 MOTOR RUNNING
TB-DI-08-7	IN 1	ME-2200 MOTOR FAULT
TB-DI-08-9	IN 2	ME-2200 HIGH PRESSURE
TB-DI-08-11	IN 3	ME-2200 AUTO POSITION
TB-DI-08-13	IN 4	ME-2200 HAND POSITION
TB-DI-08-15	IN 5	P-2350 JOG
TB-DI-08-17	IN 6	P-2350 IN REMOTE
TB-DI-08-19	IN 7	P-2350 READY
TB-DI-08-2	AC COM	
TB-DI-08-22	IN 8	P-2350 AUTO MODE
TB-DI-08-24	IN 9	P-2350 NOT FAULTED
TB-DI-08-26	IN 10	ME-2400 JOG
TB-DI-08-28	IN 11	ME-2400 IN REMOTE
TB-DI-08-30	IN 12	ME-2400 READY
TB-DI-08-32	IN 13	ME-2400 AUTO MODE
TB-DI-08-14	IN 14	ME-2400 NOT FAULTED
TB-DI-08-36	IN 15	SPARE
TB-DI-08-2	AC COM	

PLC: 01
RACK: 03
SLOT: 04

NOTES:

ALL PROJECT WORK OUTSIDE THE BOX NOTED FOR SCHEDULE B, SHALL BE **SCHEDULE A**

LEGEND:

- WIRING INTERNAL TO PANEL
- FIELD WIRING
- ?? DEVICE TERMINAL
- ??? FEED-THROUGH TERMINAL IN PANEL
- SH ??? SHIELD TERMINAL IN PANEL
- ??? GROUND TERMINAL IN PANEL
- ?A ??? FUSE TERMINAL IN PANEL
- ?A ??? CIRCUIT BREAKER TERMINAL IN PANEL
- NC / CR??? C / NO RELAY TERMINAL IN PANEL

PATH: U:\PSO\Projects\Clients\1598-TulalipTribes\216-1598-102 MBR Upgrade\99Svcs\CADD\DWG PLOTTED BY: vondejpm DATE: Wednesday, February 21, 2018 4:27:54 PM LAYOUT: I227

	REVISIONS	DATE	BY

DESIGNED D. MILES
DRAWN D. MILES
CHECKED J. MURPHY
APPROVED B. BUNKER

ONE INCH AT FULL SCALE. IF NOT, SCALE ACCORDINGLY

FILE NAME PS1598102-I227
JOB No. 216-1598-102
DATE FEBRUARY 2018

ARTHUR G. STOKES — STATE OF WASHINGTON — 34736 — REGISTERED PROFESSIONAL ENGINEER

FEBRUARY 23, 2018

Parametrix
ENGINEERING . PLANNING . ENVIRONMENTAL SCIENCES
1019 39TH AVENUE SE, SUITE 100 | PUYALLUP, WA 98374
P 253.604.6600
WWW.PARAMETRIX.COM

PROJECT NAME
THE CONSOLIDATED BOROUGH OF QUIL CEDA VILLAGE
MBR TREATMENT FACILITY UPGRADE
TULALIP, WASHINGTON

LCP-2000
PLC 1, RACK 3, SLOT 4
DISCRETE INPUTS

DRAWING NO. 120 OF 157

I227

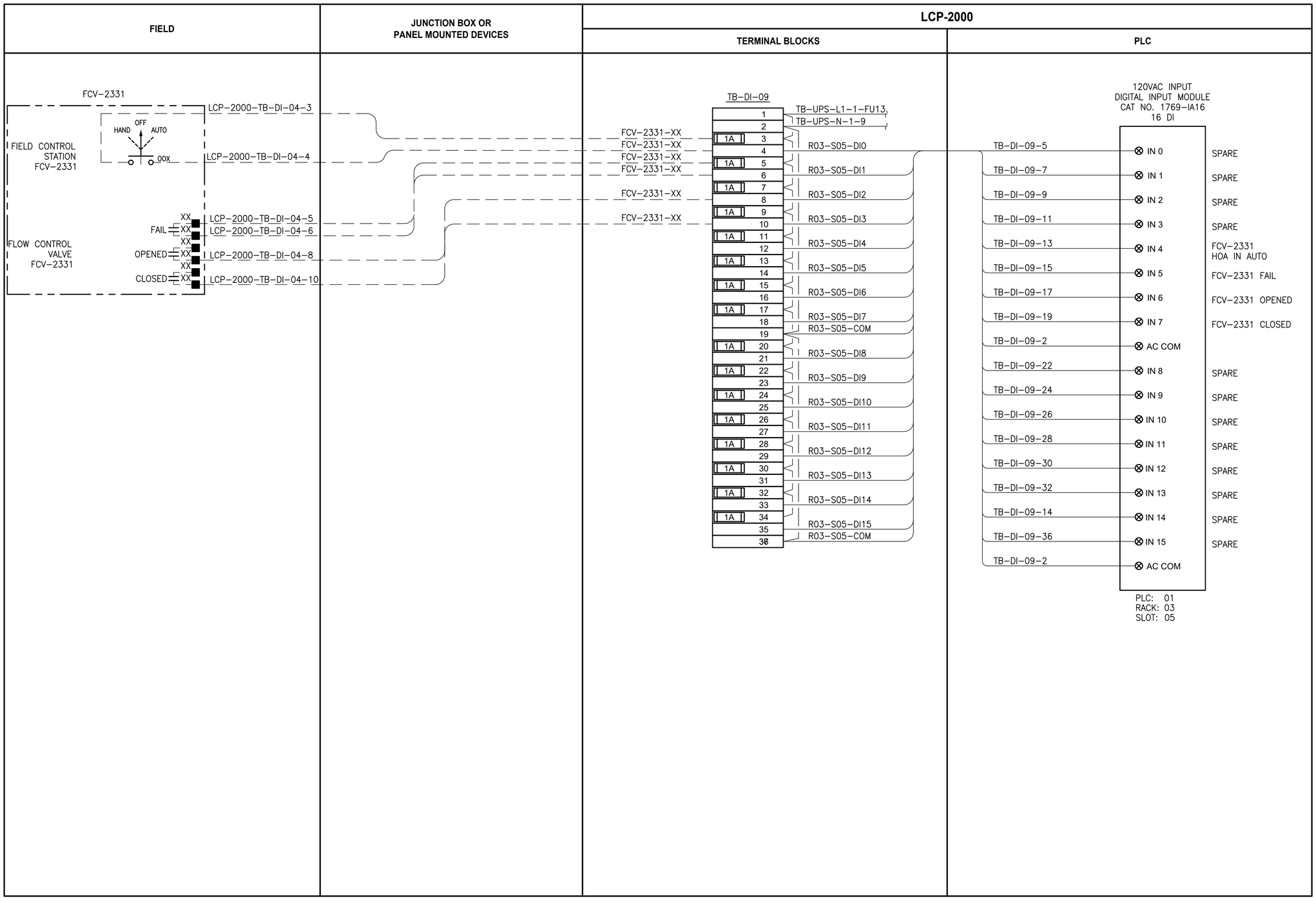

NOTES:

PROJECT WORK SHOWN ON THIS DRAWING IS ALL INCLUDED IN SCHEDULE A

LEGEND:

- WIRING INTERNAL TO PANEL
- FIELD WIRING
- ?? — DEVICE TERMINAL
- ??? — FEED-THROUGH TERMINAL IN PANEL
- SH ??? — SHIELD TERMINAL IN PANEL
- ??? — GROUND TERMINAL IN PANEL
- ?A ??? — FUSE TERMINAL IN PANEL
- ?A ??? — CIRCUIT BREAKER TERMINAL IN PANEL
- NC / CR??? C / NO — RELAY TERMINAL IN PANEL

REVISIONS	DATE	BY

DESIGNED J. VONDERAHE
DRAWN J. VONDERAHE
CHECKED J. MURPHY
APPROVED B. BUNKER

ONE INCH AT FULL SCALE. IF NOT, SCALE ACCORDINGLY

FILE NAME PS1598102-I228
JOB No. 216-1598-102
DATE FEBRUARY 2018

ARTHUR G. STOKES — STATE OF WASHINGTON — 34736 — REGISTERED PROFESSIONAL ENGINEER

FEBRUARY 23, 2018

Parametrix
ENGINEERING . PLANNING . ENVIRONMENTAL SCIENCES
1019 39TH AVENUE SE, SUITE 100 | PUYALLUP, WA 98374
P 253.604.6600
WWW.PARAMETRIX.COM

PROJECT NAME
THE CONSOLIDATED BOROUGH OF QUIL CEDA VILLAGE
MBR TREATMENT FACILITY UPGRADE
TULALIP, WASHINGTON

LCP-2000
PLC 1, RACK 3, SLOT 5
DISCRETE INPUTS

DRAWING NO. 121 OF 157

I228

PATH: U:\PSO\Projects\Clients\1598-TulalipTribes\216-1598-102 MBR Upgrade\999vcs\CADD\DWG
PLOTTED BY: vondejorn DATE: Friday, February 23, 2018 8:19:38 AM
LAYOUT: I228

FIELD	JUNCTION BOX OR PANEL MOUNTED DEVICES	LCP-2000	
		TERMINAL BLOCKS	PLC

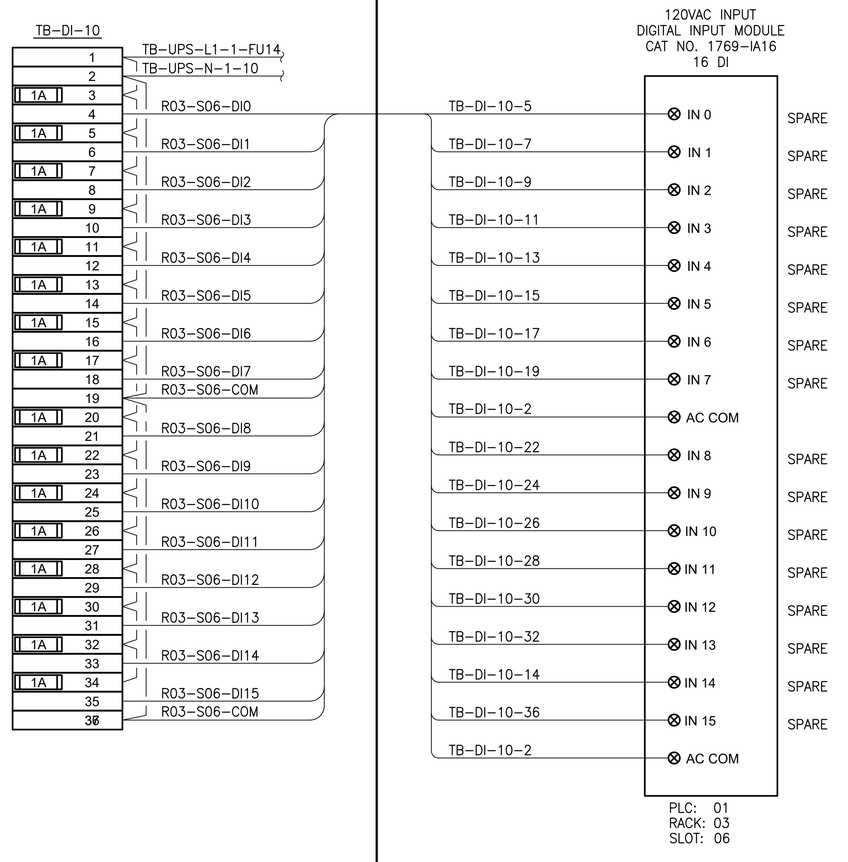

NOTES:

ALL PROJECT WORK OUTSIDE THE BOX NOTED FOR SCHEDULE B, SHALL BE **SCHEDULE A**

LEGEND:

- WIRING INTERNAL TO PANEL
- FIELD WIRING
- ?? DEVICE TERMINAL
- ??? FEED-THROUGH TERMINAL IN PANEL
- SH ??? SHIELD TERMINAL IN PANEL
- ??? GROUND TERMINAL IN PANEL
- ?A ??? FUSE TERMINAL IN PANEL
- ?A ??? CIRCUIT BREAKER TERMINAL IN PANEL
- NC / CR??? C / NO RELAY TERMINAL IN PANEL

REVISIONS	DATE	BY

DESIGNED D. MILES
DRAWN D. MILES
CHECKED J. MURPHY
APPROVED B. BUNKER

ONE INCH AT FULL SCALE. IF NOT, SCALE ACCORDINGLY

FILE NAME PS1598102-I229
JOB No. 216-1598-102
DATE FEBRUARY 2018

ARTHUR G. STOKES STATE OF WASHINGTON 34736 REGISTERED PROFESSIONAL ENGINEER

FEBRUARY 23, 2018

Parametrix
ENGINEERING . PLANNING . ENVIRONMENTAL SCIENCES
1019 39TH AVENUE SE, SUITE 100 | PUYALLUP, WA 98374
P 253.604.6600
WWW.PARAMETRIX.COM

PROJECT NAME
THE CONSOLIDATED BOROUGH OF QUIL CEDA VILLAGE
MBR TREATMENT FACILITY UPGRADE
TULALIP, WASHINGTON

LCP-2000
PLC 1, RACK 3, SLOT 6
DISCRETE INPUTS

DRAWING NO. 122 OF 157

I229

PATH: U:\PSO\Projects\Clients\1598-TulalipTribes\216-1598-102 MBR Upgrade\999vca\CADD\DWG PLOTTED BY: vondejorn DATE: Friday, February 23, 2018 8:15:50 AM LAYOUT: I229

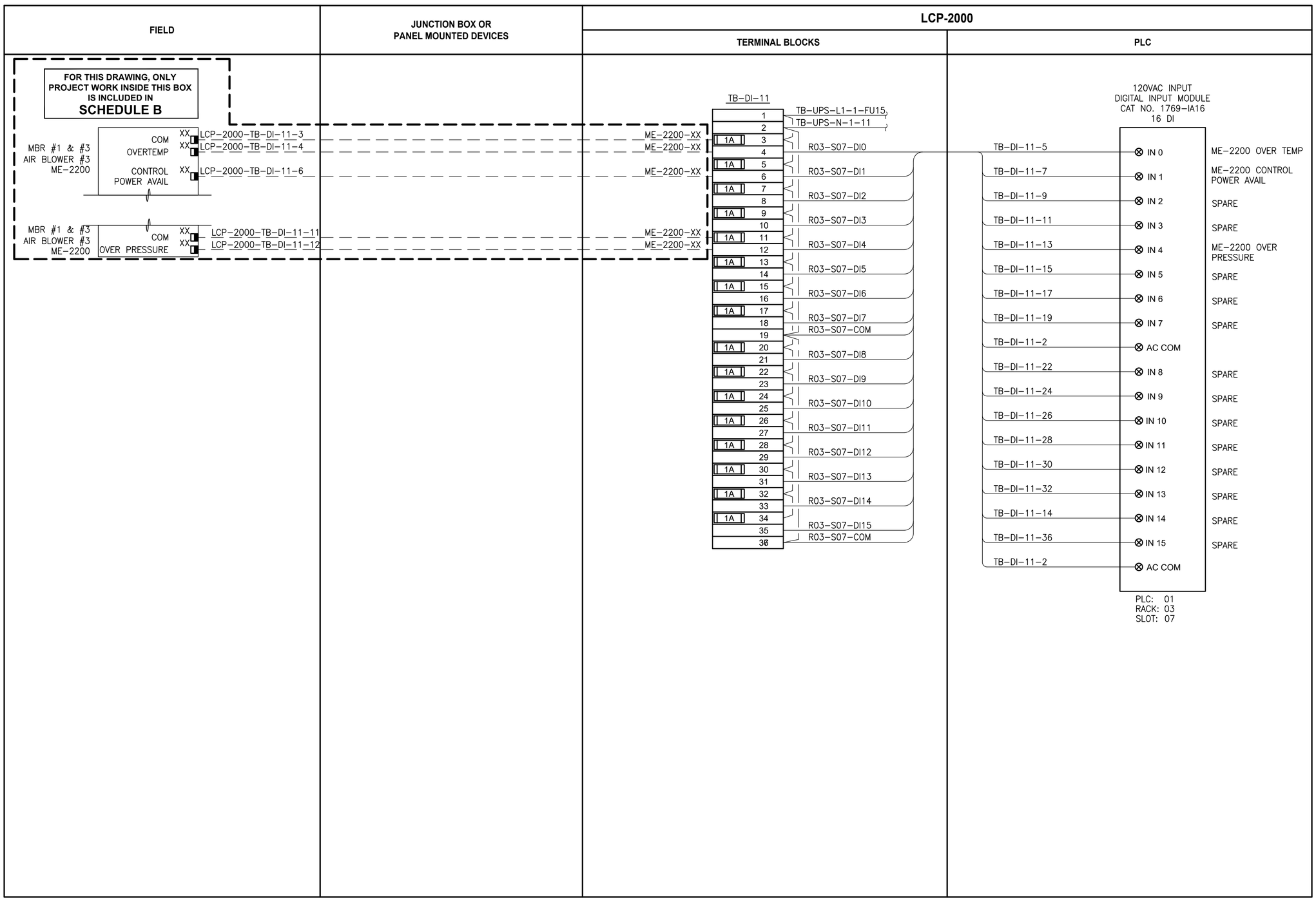

NOTES:

ALL PROJECT WORK OUTSIDE THE BOX NOTED FOR SCHEDULE B, SHALL BE **SCHEDULE A**

LEGEND:

- WIRING INTERNAL TO PANEL
- FIELD WIRING
- ?? DEVICE TERMINAL
- ??? FEED-THROUGH TERMINAL IN PANEL
- SH ??? SHIELD TERMINAL IN PANEL
- ??? GROUND TERMINAL IN PANEL
- ?A ??? FUSE TERMINAL IN PANEL
- ?A ??? CIRCUIT BREAKER TERMINAL IN PANEL
- NC / CR??? C / NO RELAY TERMINAL IN PANEL

REVISIONS	DATE	BY

DESIGNED D. MILES
DRAWN D. MILES
CHECKED J. MURPHY
APPROVED B. BUNKER

ONE INCH AT FULL SCALE. IF NOT, SCALE ACCORDINGLY

FILE NAME PS1598102-I230
JOB No. 216-1598-102
DATE FEBRUARY 2018

ARTHUR G. STOKES — STATE OF WASHINGTON — 34736 — REGISTERED PROFESSIONAL ENGINEER

FEBRUARY 23, 2018

Parametrix
ENGINEERING . PLANNING . ENVIRONMENTAL SCIENCES
1019 39TH AVENUE SE, SUITE 100 | PUYALLUP, WA 98374
P 253.604.6600
WWW.PARAMETRIX.COM

PROJECT NAME
THE CONSOLIDATED BOROUGH OF QUIL CEDA VILLAGE
MBR TREATMENT FACILITY UPGRADE
TULALIP, WASHINGTON

LCP-2000
PLC 1, RACK 3, SLOT 7
DISCRETE INPUTS

DRAWING NO. 123 OF 157

I230

PATH: U:\PSO\Projects\Clients\1598-TulalipTribes\216-1598-102 MBR Upgrade\999vcs\CADD\DWG
PLOTTED BY: vondejorn DATE: Friday, February 23, 2018 8:25:20 AM
LAYOUT: I230

RACK 01

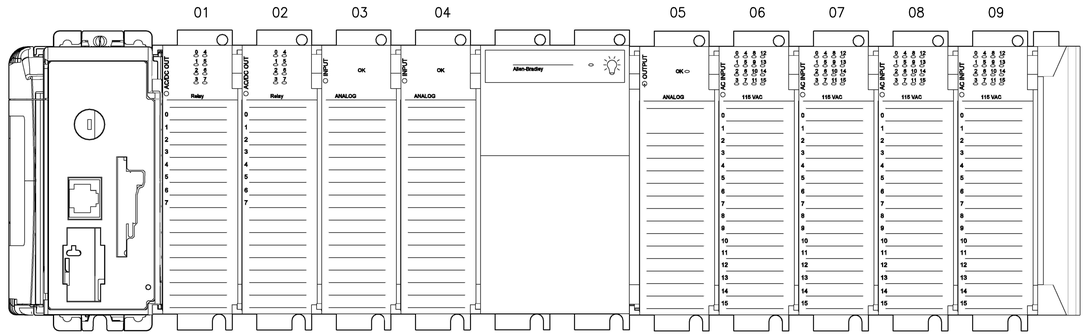

1 11 11 6 6 2 7 4 4 4 4 10

NOTES:

1. PLC RACK ASSEMBLY SHALL REPLACE THE EXISTING PLC IN LCP-2000 (LCP-2000 TO BE REDESIGNATED AS LCP-2023).
2. REFER TO SECTION 40 61 13 FOR SYSTEM INTEGRATOR SEQUENCING.
3. CONTRACTOR TO COORDINATE ACTUAL WIRE NUMBERS BASED ON TERMINAL NUMBERS ON EQUIPMENT PROVIDED.
4. EXISTING TERMINAL NUMBERS, FROM TSI AS-BUILT DRAWINGS.

PROJECT WORK SHOWN ON THIS DRAWING IS ALL INCLUDED IN SCHEDULE B

LCP-2023 RACK LAYOUT LEGEND

1	1769-L36ERM (1)	COMPACTLOGIX CONTROLLER
2	1769-PA4	POWER SUPPLY 120/240 VAC INPUT
3	NOT USED	
4	1769-IA16	16 POINT 120 VAC INPUT MODULE
5	NOT USED	
6	1769-IF16C	16 CHANNEL COMPACT HIGH-DENSITY ANALOG VOLTAGE INPUT MODULE
7	1769-OF8C	8 CHANNEL ANALOG CURRENT OUTPUT MODULE
8	NOT USED	
9	NOT USED	
10	1769-ECR	RIGHT END CAP/TERMINATOR
11	1769-OW8I	8 POINT VAC/VDC ISOLATED RELAY OUTPUT MODULE

	REVISIONS	DATE	BY
1	PLC PROCESSOR CHANGE	3-29-18	AS

DESIGNED D. MILES
DRAWN D. MILES
CHECKED J. MURPHY
APPROVED B. BUNKER

ONE INCH AT FULL SCALE. IF NOT, SCALE ACCORDINGLY

FILE NAME PS1598102-I240
JOB No. 216-1598-102
DATE FEBRUARY 2018

ARTHUR G. STOKES — STATE OF WASHINGTON — 34736 — REGISTERED PROFESSIONAL ENGINEER

MARCH 29, 2018

Parametrix
ENGINEERING . PLANNING . ENVIRONMENTAL SCIENCES
1019 39TH AVENUE SE, SUITE 100 | PUYALLUP, WA 98374
P 253.604.6600
WWW.PARAMETRIX.COM

PROJECT NAME
THE CONSOLIDATED BOROUGH OF QUIL CEDA VILLAGE
MBR TREATMENT FACILITY UPGRADE
TULALIP, WASHINGTON

LCP-2023 PLC RACK ASSEMBLY

DRAWING NO. 124 OF 157

I240

PATH: U:\PSO\Projects\Clients\1598-TulalipTribes\216-1598-102 MBR Upgrade\99Svcs\CADD\DWG PLOTTED BY: milesdr DATE: Thursday, March 29, 2018 8:15:44 AM LAYOUT: I240

PATH: U:\PSO\Projects\Clients\1598-TulalipTribes\216-1598-102 MBR Upgrade\99Svcs\CADD\DWG PLOTTED BY: vondejorn DATE: Friday, February 23, 2018 8:38:36 AM
LAYOUT: I241

LCP-2023

PLC

24VDC OUTPUT MODULE
CAT NO. 1769-OW8I
8 DO

V-2406 VALVE STOP	VAC/VDC 0	21364
	OUT 0	21366
V-2406 VALVE OPEN	VAC/VDC 1	21368
	OUT 1	21370
V-2406 VALVE CLOSE	VAC/VDC 2	
	OUT 2	21372
V-2706 VALVE STOP	VAC/VDC 3	21616
	OUT 3	21618
V-2706 VALVE OPEN	VAC/VDC 4	21620
	OUT 4	21622
V-2706 VALVE CLOSE	VAC/VDC 5	
	OUT 5	21624
SPARE	VAC/VDC 6	22036
	OUT 6	22038
P-2175 AUTO CALL	VAC/VDC 7	22030
	OUT 7	22034

PLC: 02
RACK: 01
SLOT: 01

TERMINAL BLOCKS

21364, 21366, 21368, 21370, 21372, 21616, 21618, 21620, 21622, 21624, 22036, 22038, 22030, 22034

FIELD

MIXED LIQUOR RECYCLE PUMP NO. 3 P-2175 (1)
XX (+)
XX RUN

PLC

24VDC OUTPUT MODULE
CAT NO. 1769-OW8I
8 DO

P-2300 FAULT RESET	VAC/VDC 0	22054
	OUT 0	22056
P-2300 CALL	VAC/VDC 1	
	OUT 1	22058
P-2440 AUTO CALL	VAC/VDC 2	XXX
	OUT 2	XXX
P-2740 AUTO CALL	VAC/VDC 3	XXX
	OUT 3	XXX
SPARE	VAC/VDC 4	XXX
	OUT 4	XXX
SPARE	VAC/VDC 5	XXX
	OUT 5	XXX
SPARE	VAC/VDC 6	XXX
	OUT 6	XXX
SPARE	VAC/VDC 7	XXX
	OUT 7	XXX

PLC: 02
RACK: 01
SLOT: 02

TERMINAL BLOCKS

22054, 22056, 22058, XXX

FIELD

PERMEATE PUMP 2 P-2440 (1)
XX (+)
XX RUN

PERMEATE PUMP 3 P-2740 (1)
XX (+)
XX RUN

NOTES:

1. REFER TO SHEET E10 FOR VFD TYPICAL ELEMENTARY DIAGRAM.
2. CONTRACTOR TO COORDINATE ACTUAL WIRE NUMBERS BASED ON TERMINAL NUMBERS ON EQUIPMENT PROVIDED.
3. EXISTING TERMINAL NUMBERS, FROM TSI AS-BUILT DRAWINGS.

PROJECT WORK SHOWN ON THIS DRAWING IS ALL INCLUDED IN SCHEDULE B

LEGEND:

- WIRING INTERNAL TO PANEL
- FIELD WIRING
- ?? DEVICE TERMINAL
- ??? FEED-THROUGH TERMINAL IN PANEL
- SH ??? SHIELD TERMINAL IN PANEL
- ⏚ ??? GROUND TERMINAL IN PANEL
- ?A ??? FUSE TERMINAL IN PANEL
- ?A ↷ ??? CIRCUIT BREAKER TERMINAL IN PANEL
- NC / CR??? C / NO RELAY TERMINAL IN PANEL

REVISIONS	DATE	BY

DESIGNED D. MILES
DRAWN D. MILES
CHECKED J. MURPHY
APPROVED B. BUNKER

ONE INCH AT FULL SCALE. IF NOT, SCALE ACCORDINGLY

FILE NAME PS1598102-I241
JOB No. 216-1598-102
DATE FEBRUARY 2018

ARTHUR G. STOKES — STATE OF WASHINGTON — 34736 — REGISTERED PROFESSIONAL ENGINEER

FEBRUARY 23, 2018

Parametrix
ENGINEERING . PLANNING . ENVIRONMENTAL SCIENCES
1019 39TH AVENUE SE, SUITE 100 | PUYALLUP, WA 98374
P 253.604.6600
WWW.PARAMETRIX.COM

PROJECT NAME
THE CONSOLIDATED BOROUGH OF QUIL CEDA VILLAGE
MBR TREATMENT FACILITY UPGRADE
TULALIP, WASHINGTON

LCP-2023
PLC 2, RACK 1, SLOT 1 AND SLOT 2 DISCRETE OUTPUTS

DRAWING NO.
125 OF 157

I241

LCP-2023

FIELD

MIXED LIQUOR RECYCLE PUMP P-2175
SPEED REFERENCE XX(+) XX(-)

(1) PERMEATE PUMP 2 P-2440
SPEED REFERENCE XX(+) XX(-)

(1) PERMEATE PUMP 3 P-2740
SPEED REFERENCE XX(+) XX(-)

TERMINAL BLOCKS

24C

23058	4-20mA	23058
23060		
SHLD		
23062	4-20mA	23062
23064		
SHLD		
23076	4-20mA	23076
23078		
SHLD		
23080	4-20mA	23080
23082		
SHLD		
XXX	4-20mA	XXX
XXX		
SHLD		
XXX	4-20mA	XXX
XXX		
SHLD		
23088	4-20mA	23088
23090		
SHLD		
23104	4-20mA	23104
23106		
SHLD		
23298	4-20mA	23298
23300		
SHLD		
23154	4-20mA	23154
23156		
SHLD		
23158	4-20mA	23158
23160		
SHLD		
23162	4-20mA	23162
23164		
SHLD		
23302	4-20mA	23302
23304		
SHLD		
23226	4-20mA	23226
23228		
SHLD		
23230	4-20mA	23230
23232		
SHLD		
23310	4-20mA	23310
23312		
SHLD		

PLC

mA CURRENT ANALOG INPUT MODULE CAT NO. 1769-IF16C 16 AI

23058	IN0+	P-2175 SPEED REFERENCE
23062	IN1+	SPARE
23076	IN2+	P-2300 FREQUENCY
23080	IN3+	P-2300 CURRENT
XXX	IN4+	P-2440 SPEED REFERENCE
XXX	IN5+	P-2740 SPEED REFERENCE
23088	IN6+	FIT-2304 FLOW (0-1400 GPM)
23104	IN7+	FIT-2111 FLOW (0-1400 GPM)
	COM	
	COM	
23298	IN8+	X-2404 TURBIDITY (0-5 NTU)
23154	IN9+	X-2405 TURBIDITY (0-5 NTU)
23158	IN10+	DOT-2407 DISSOLVED OXYGEN (0-7 MG/L)
23162	IN11+	FIT-2417 FLOW (0-300 GPM)
23302	IN12+	FIT-2418 FLOW (0-300 GPM)
23226	IN13+	FIT-2717 FLOW
23230	IN14+	FIT-2718 FLOW
23310	IN15+	LE-2408/LIT-2739 MBR #2 TANK LEVEL (0-10 FT)

PLC: 02
RACK: 01
SLOT: 03

FIELD

MBR #2 PERMEATE VALVE FCV-2440
POSITION XX(+) XX(-)

MBR #3 PERMEATE VALVE FCV-2740
POSITION XX(+) XX(-)

TERMINAL BLOCKS

24C

23238	4-20mA	23238
23240		
SHLD		
XXX	4-20mA	XXX
XXX		
SHLD		
23214	4-20mA	23214
23216		
SHLD		
23218	4-20mA	23218
23220		
SHLD		
XXX	4-20mA	XXX
XXX		
SHLD		
XXX	4-20mA	XXX
XXX		
SHLD		
XXX	4-20mA	XXX
XXX		
SHLD		
XXX	4-20mA	XXX
XXX		
SHLD		
XXX	4-20mA	XXX
XXX		
SHLD		
XXX	4-20mA	XXX
XXX		
SHLD		
XXX	4-20mA	XXX
XXX		
SHLD		
XXX	4-20mA	XXX
XXX		
SHLD		
XXX	4-20mA	XXX
XXX		
SHLD		
XXX	4-20mA	XXX
XXX		
SHLD		

PLC

mA CURRENT ANALOG INPUT MODULE CAT NO. 1769-IF16C 16 AI

23238	IN0+	LE-2708/LIT-2739 MBR #3 TANK LEVEL (0-10 FT)
XXX	IN1+	SPARE
23214	IN2+	X-2704 TURBIDITY
23218	IN3+	X-2705 TURBIDITY
XXX	IN4+	SPARE
XXX	IN5+	FCV-2440 POSITION STATUS
XXX	IN6+	FCV-2740 POSITION STATUS
XXX	IN7+	SPARE
	COM	
	COM	
XXX	IN8+	SPARE
XXX	IN9+	SPARE
XXX	IN10+	SPARE
XXX	IN11+	SPARE
XXX	IN12+	SPARE
XXX	IN13+	SPARE
XXX	IN14+	SPARE
XXX	IN15+	SPARE

PLC: 02
RACK: 01
SLOT: 04

NOTES:

1. REFER TO SHEET E10 FOR VFD TYPICAL ELEMENTARY DIAGRAM.
2. CONTRACTOR TO COORDINATE ACTUAL WIRE NUMBERS BASED ON TERMINAL NUMBERS ON EQUIPMENT PROVIDED.
3. EXISTING TERMINAL NUMBERS, FROM TSI AS-BUILT DRAWINGS.

PROJECT WORK SHOWN ON THIS DRAWING IS ALL INCLUDED IN SCHEDULE B

LEGEND:

- WIRING INTERNAL TO PANEL
- FIELD WIRING
- [??] DEVICE TERMINAL
- [???] FEED-THROUGH TERMINAL IN PANEL
- [SH ???] SHIELD TERMINAL IN PANEL
- [⏚ ???] GROUND TERMINAL IN PANEL
- [?A ???] FUSE TERMINAL IN PANEL
- [?A ↷ ???] CIRCUIT BREAKER TERMINAL IN PANEL
- [NC / CR??? C / NO] RELAY TERMINAL IN PANEL

PATH: U:\PSO\Projects\Clients\1598-Tulalip Tribes\216-1598-102 MBR Upgrade\99Svcs\CADD\DWG PLOTTED BY: vondejam DATE: Friday, February 23, 2018 8:42:35 AM
LAYOUT: I242

	REVISIONS	DATE	BY

DESIGNED D. MILES
DRAWN D. MILES
CHECKED J. MURPHY
APPROVED B. BUNKER

ONE INCH AT FULL SCALE. IF NOT, SCALE ACCORDINGLY
FILE NAME PS1598102-I242
JOB No. 216-1598-102
DATE FEBRUARY 2018

ARTHUR G. STOKES — STATE OF WASHINGTON — 34736 — REGISTERED PROFESSIONAL ENGINEER

FEBRUARY 23, 2018

Parametrix
ENGINEERING . PLANNING . ENVIRONMENTAL SCIENCES
1019 39TH AVENUE SE, SUITE 100 | PUYALLUP, WA 98374
P 253.604.6600
WWW.PARAMETRIX.COM

PROJECT NAME
THE CONSOLIDATED BOROUGH OF QUIL CEDA VILLAGE
MBR TREATMENT FACILITY UPGRADE
TULALIP, WASHINGTON

LCP-2023
PLC 2, RACK 1, SLOT 3 AND SLOT 4 ANALOG INPUTS

DRAWING NO. 126 OF 157

I242

LCP-2023

PLC	TERMINAL BLOCKS	FIELD	PLC	TERMINAL BLOCKS	FIELD

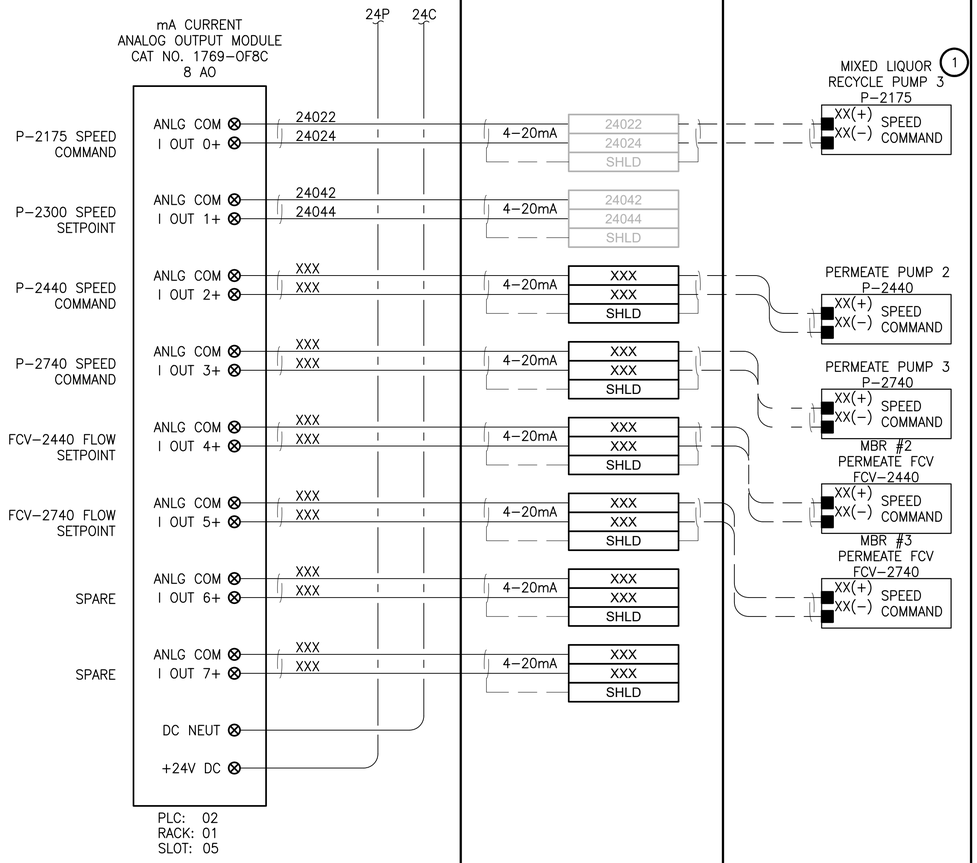

NOTES:

1. REFER TO SHEET E10 FOR VFD TYPICAL ELEMENTARY DIAGRAM.
2. CONTRACTOR TO COORDINATE ACTUAL WIRE NUMBERS BASED ON TERMINAL NUMBERS ON EQUIPMENT PROVIDED.
3. EXISTING TERMINAL NUMBERS, FROM TSI AS-BUILT DRAWINGS.

PROJECT WORK SHOWN ON THIS DRAWING IS ALL INCLUDED IN SCHEDULE B

LEGEND:

- WIRING INTERNAL TO PANEL
- FIELD WIRING
- [??] DEVICE TERMINAL
- [???] FEED-THROUGH TERMINAL IN PANEL
- [SH ???] SHIELD TERMINAL IN PANEL
- [⏚ ???] GROUND TERMINAL IN PANEL
- [?A ???] FUSE TERMINAL IN PANEL
- [?A ↷ ???] CIRCUIT BREAKER TERMINAL IN PANEL
- RELAY TERMINAL IN PANEL (NC / CR??? C / NO)

PATH: U:\PSO\Projects\Clients\1598-TulalipTribes\216-1598-102 MBR Upgrade\99Svcs\CADD\DWG PLOTTED BY: vondejam DATE: Friday, February 23, 2018 8:43:50 AM LAYOUT: I243

REVISIONS	DATE	BY

DESIGNED D. MILES
DRAWN D. MILES
CHECKED J. MURPHY
APPROVED B. BUNKER

ONE INCH AT FULL SCALE. IF NOT, SCALE ACCORDINGLY

FILE NAME PS1598102-I243
JOB No. 216-1598-102
DATE FEBRUARY 2018

ARTHUR G. STOKE — STATE OF WASHINGTON — 34736 — REGISTERED PROFESSIONAL ENGINEER

FEBRUARY 23, 2018

Parametrix
ENGINEERING . PLANNING . ENVIRONMENTAL SCIENCES
1019 39TH AVENUE SE, SUITE 100 | PUYALLUP, WA 98374
P 253.604.6600
WWW.PARAMETRIX.COM

PROJECT NAME
THE CONSOLIDATED BOROUGH OF QUIL CEDA VILLAGE
MBR TREATMENT FACILITY UPGRADE
TULALIP, WASHINGTON

LCP-2023
PLC 2, RACK 1, SLOT 5
ANALOG OUTPUTS

DRAWING NO. 127 OF 157

I243

LCP-2023

FIELD	TERMINAL BLOCKS	PLC	FIELD	TERMINAL BLOCKS	PLC

NOTES:

1. REFER TO SHEET E10 FOR VFD TYPICAL ELEMENTARY DIAGRAM.
2. ADD INTERPOSING RELAYS TO ISOLATE FIELD–GENERATED VOLTAGE FROM PLC INPUTS. RELABEL TERMINAL BLOCKS ASSOCIATED WITH THESE INPUTS USING THE "–CRXX" SUFFIX AS SHOWN TO DIFFERENTIATE FROM EXISTING FIELD WIRES WITH THE SAME NUMBER.
3. CONTRACTOR TO COORDINATE ACTUAL WIRE NUMBERS BASED ON TERMINAL NUMBERS ON EQUIPMENT PROVIDED.
4. EXISTING TERMINAL NUMBERS, FROM TSI AS–BUILT DRAWINGS.

PROJECT WORK SHOWN ON THIS DRAWING IS ALL INCLUDED IN SCHEDULE B

LEGEND:

- WIRING INTERNAL TO PANEL
- FIELD WIRING
- ?? DEVICE TERMINAL
- ??? FEED–THROUGH TERMINAL IN PANEL
- SH ??? SHIELD TERMINAL IN PANEL
- ??? GROUND TERMINAL IN PANEL
- ?A ??? FUSE TERMINAL IN PANEL
- ?A ??? CIRCUIT BREAKER TERMINAL IN PANEL
- NC / CR??? C / NO RELAY TERMINAL IN PANEL

PLC: 02 RACK: 01 SLOT: 06

PLC: 02 RACK: 01 SLOT: 07

PATH: U:\PSO\Projects\Clients\1598–TulalipTribes\216–1598–102 MBR Upgrade\99Svcs\CADD\DWG PLOTTED BY: vondejonn DATE: Friday, February 23, 2018 8:46:29 AM LAYOUT: I244

REVISIONS	DATE	BY

DESIGNED D. MILES
DRAWN D. MILES
CHECKED J. MURPHY
APPROVED B. BUNKER

ONE INCH AT FULL SCALE. IF NOT, SCALE ACCORDINGLY
FILE NAME PS1598102–I244
JOB No. 216–1598–102
DATE FEBRUARY 2018

ARTHUR G. STOKES STATE OF WASHINGTON 34736 REGISTERED PROFESSIONAL ENGINEER
FEBRUARY 23, 2018

Parametrix
ENGINEERING . PLANNING . ENVIRONMENTAL SCIENCES
1019 39TH AVENUE SE, SUITE 100 | PUYALLUP, WA 98374
P 253.604.6600
WWW.PARAMETRIX.COM

PROJECT NAME
THE CONSOLIDATED BOROUGH OF QUIL CEDA VILLAGE
MBR TREATMENT FACILITY UPGRADE
TULALIP, WASHINGTON

LCP-2023
PLC 2, RACK 1, SLOT 6 AND SLOT 7
DISCRETE INPUTS

DRAWING NO. 128 OF 157
I244

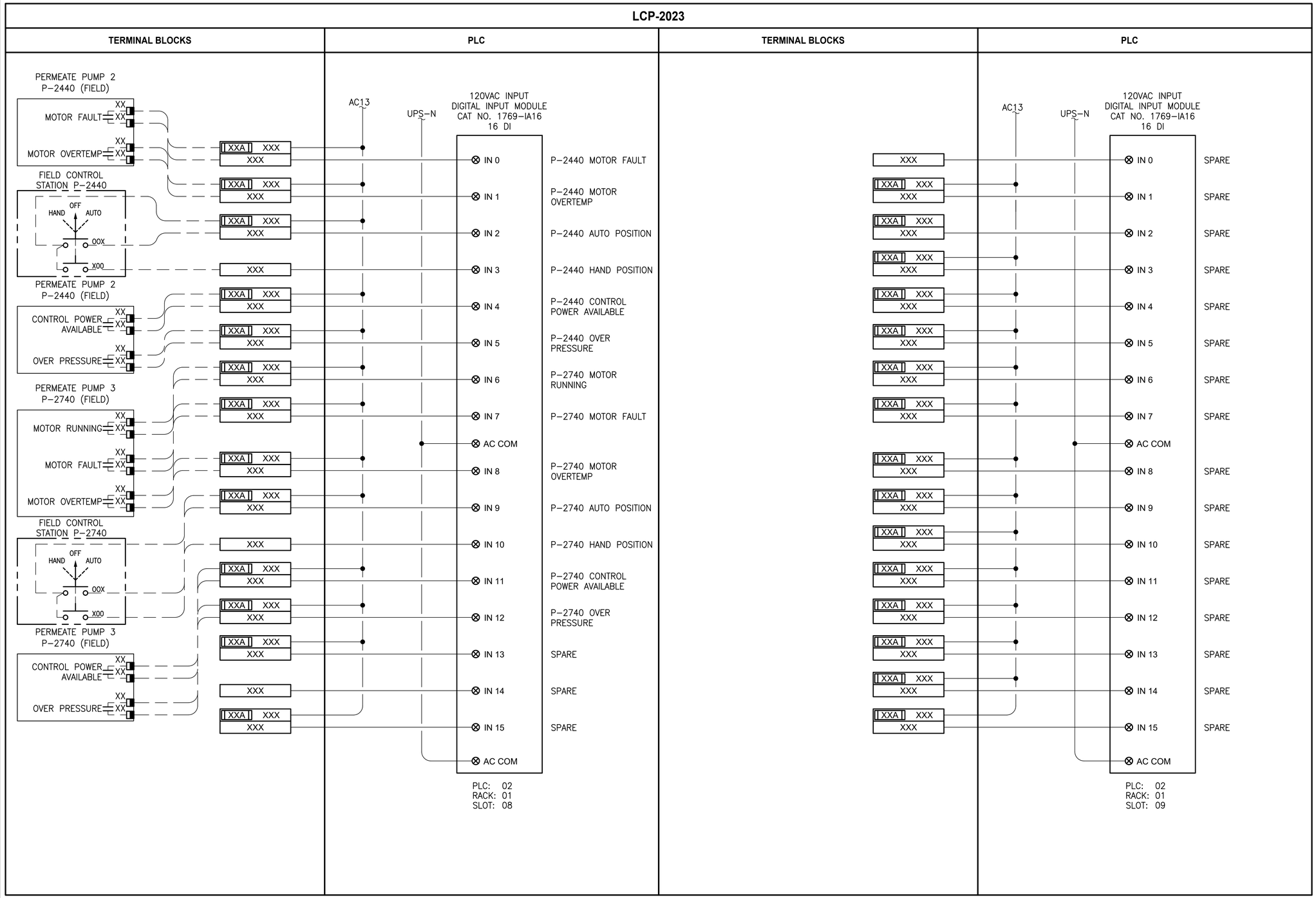

NOTES:

1. CONTRACTOR TO COORDINATE ACTUAL WIRE NUMBERS BASED ON TERMINAL NUMBERS ON EQUIPMENT PROVIDED.
2. EXISTING TERMINAL NUMBERS, FROM TSI AS-BUILT DRAWINGS.

PROJECT WORK SHOWN ON THIS DRAWING IS ALL INCLUDED IN SCHEDULE B

LEGEND:

- WIRING INTERNAL TO PANEL
- FIELD WIRING
- ?? DEVICE TERMINAL
- ??? FEED-THROUGH TERMINAL IN PANEL
- SH ??? SHIELD TERMINAL IN PANEL
- ??? GROUND TERMINAL IN PANEL
- ?A ??? FUSE TERMINAL IN PANEL
- ?A ??? CIRCUIT BREAKER TERMINAL IN PANEL
- NC CR??? C NO RELAY TERMINAL IN PANEL

REVISIONS	DATE	BY

DESIGNED D. MILES
DRAWN D. MILES
CHECKED J. MURPHY
APPROVED B. BUNKER

ONE INCH AT FULL SCALE. IF NOT, SCALE ACCORDINGLY
FILE NAME PS1598102-I245
JOB No. 216-1598-102
DATE FEBRUARY 2018

ARTHUR G. STOKES
STATE OF WASHINGTON
34736
REGISTERED PROFESSIONAL ENGINEER

FEBRUARY 23, 2018

Parametrix
ENGINEERING . PLANNING . ENVIRONMENTAL SCIENCES
1019 39TH AVENUE SE, SUITE 100 | PUYALLUP, WA 98374
P 253.604.6600
WWW.PARAMETRIX.COM

PROJECT NAME
THE CONSOLIDATED BOROUGH OF QUIL CEDA VILLAGE
MBR TREATMENT FACILITY UPGRADE
TULALIP, WASHINGTON

LCP-2023
PLC 2, RACK 1, SLOT 8 AND SLOT 9 DISCRETE INPUTS

DRAWING NO. 129 OF 157
I245

LAYOUT: I245 PATH: U:\PSO\Projects\Clients\1598-TulalipTribes\216-1598-102 MBR Upgrade\99Svcs\CADD\DWG PLOTTED BY: vondejam DATE: Friday, February 23, 2018 8:48:01 AM

NOTES:

PROJECT WORK SHOWN ON THIS DRAWING IS ALL INCLUDED IN SCHEDULE A

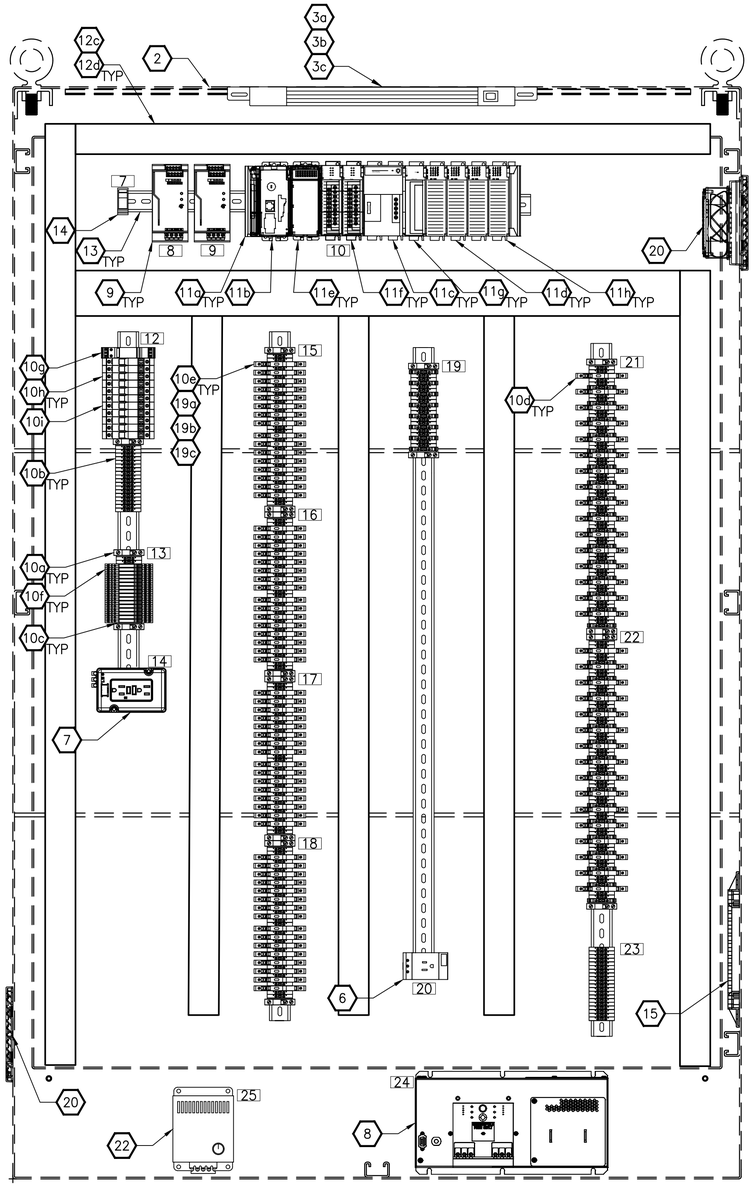

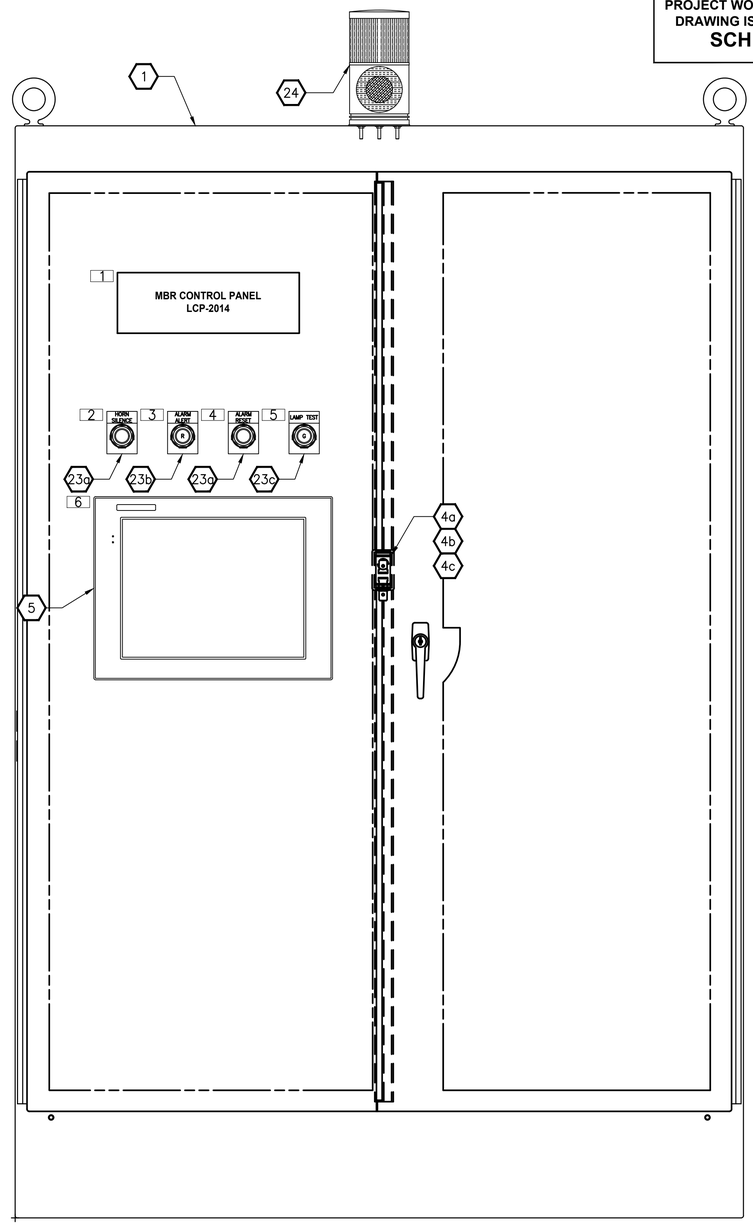

PATH: U:\PSO\Projects\Clients\1598-TulalipTribes\216-1598-102 MBR Upgrade\99Socs\CADD\DWG PLOTTED BY: vondejom DATE: Thursday, February 22, 2018 12:07:31 PM
LAYOUT: I250

	REVISIONS	DATE	BY

DESIGNED J. VONDERAHE
DRAWN J. VONDERAHE
CHECKED J. MURPHY
APPROVED B. BUNKER

ONE INCH AT FULL SCALE. IF NOT, SCALE ACCORDINGLY

FILE NAME PS1598102-I250
JOB No. 216-1598-102
DATE FEBRUARY 2018

ARTHUR G. STOKE — STATE OF WASHINGTON — 34736 — REGISTERED PROFESSIONAL ENGINEER

FEBRUARY 23, 2018

Parametrix
ENGINEERING . PLANNING . ENVIRONMENTAL SCIENCES
1019 39TH AVENUE SE, SUITE 100 | PUYALLUP, WA 98374
P 253.604.6600
WWW.PARAMETRIX.COM

PROJECT NAME
THE CONSOLIDATED BOROUGH OF QUIL CEDA VILLAGE
MBR TREATMENT FACILITY UPGRADE
TULALIP, WASHINGTON

LCP-2014 PANEL LAYOUT

DRAWING NO. 130 OF 157

I250

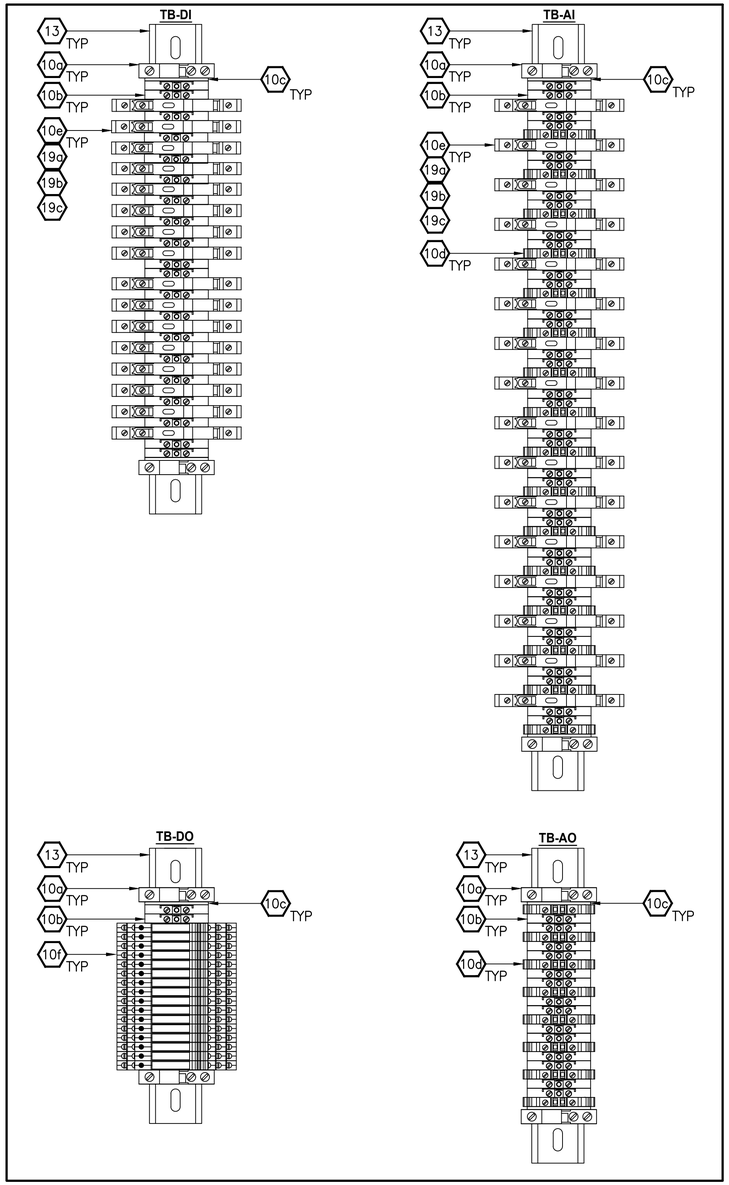

PER I/O CARD TYPE

TYPICAL TERMINAL STRIP ASSEMBLY

NO SCALE

LCP-2014 BILL OF MATERIALS

ITEM #	DESCRIPTION	MANUFACTURER	MODEL/CAT #
1	ENCLOSURE, FLOOR MOUNTED, NEMA 12, 72"X48"X24" SS	PENTAIR/HOFFMAN	A724824SSFSD
2	BACK PANEL, 72"X48", PAINTED STEEL	PENTAIR/HOFFMAN	A72P48
3a	ENCLOSURE INTERIOR LED LIGHT KIT, 90VAC-260VAC	PENTAIR/HOFFMAN	LEDA1S35
3b	LED LIGHT POWER CABLE, AC	PENTAIR/HOFFMAN	LEDA20C
3c	LED LIGHT EXTENSION CONNECTOR, AC	PENTAIR/HOFFMAN	LEDA10E
4a	LIGHT DOOR SWITCH	PENTAIR/HOFFMAN	ALFSWD
4b	LIGHT DOOR SWITCH MOUNTING BRACKET	PENTAIR/HOFFMAN	PDLFBRKT
4c	DOOR SWITCH CABLE	PENTAIR/HOFFMAN	LDSWITCH18
5	C-MORE HMI PANEL, 15IN	AUTOMATIONDIRECT	EA9-T15CL
6	RECEPTACLE, SIMPLEX	PHOENIX CONTACT	PHOENIX CONTACT 2963860
7	DIN-RAIL MOUNTED SERVICE OUTLET, 120VAC, 20A, GFI	PHEONIX CONTACT	EM-DUO 120/20/GFI/AUX - 5603049
8	UPS, 1500VA	TRIPPLITE	SMART1500
9	POWER SUPPLY	PHEONIX CONTACT	QUINT-PS-100-240AC/24DC/20 2938620
10a	END CLAMP	PHEONIX CONTACT	E/NS 35N #0800886
10b	FEED THROUGH TERMINAL	PHEONIX CONTACT	UT 2.5 #3044076
10c	END COVER	PHEONIX CONTACT	D-UT 2.5/10 #3047028
10d	UNIVERSAL GROUND TERMINAL BLOCK	PHEONIX CONTACT	UT 2.5-PE #3044092
10e	FUSED TERMINAL BLOCK	PHEONIX CONTACT	UK 6.5-HESI #3004171
10f	RELAY MODULE TERMINAL BLOCK	PHEONIX CONTACT	5603154
10g	CIRCUIT BREAKER 20A	EATON-CULTER HAMMER	20A C-CURVE / WMZT1C20
10h	CIRCUIT BREAKER 15A	EATON-CULTER HAMMER	15A C-CURVE / WMZT1C15
10i	CIRCUIT BREAKER 10A	EATON-CULTER HAMMER	10A C-CURVE / WMZT1C10
10j	CIRCUIT BREAKER 5A	EATON-CULTER HAMMER	5A C-CURVE / WMZT1C05
11a	COMPACT LOGIX LEFT ENDCAP	ALLEN BRADLEY	1769-ECL
11b	COMPACT LOGIX L36ERM PROCESSOR	ALLEN BRADLEY	1769-L36ERM) 1
11c	COMPACT LOGIX POWER SUPPLY	ALLEN BRADLEY	1769-PB4
11d	COMPACT LOGIX DIGITAL INPUT CARD	ALLEN BRADLEY	1769-IA16
11e	COMPACT LOGIX DIGITAL OUTPUT CARD	ALLEN BRADLEY	1769-OB16
11f	COMPACT LOGIX ANALOG INPUT CARD	ALLEN BRADLEY	1769-IF16C
11g	COMPACT LOGIX ANALOG OUTPUT CARD	ALLEN BRADLEY	1769-OF8C
11h	COMPACT LOGIX RIGHT END CAP	ALLEN BRADLEY	1769-ECR
11i	COMPACT LOGIX EXPANSION CABLE	ALLEN BRADLEY	1769-CRL3
12a	PANDUIT, TYPE F, 3" WIDE, 4" DEEP (FT)	PANDUIT	F3X4LG6
12b	PANDUIT, TYPE F, 3" WIDE COVER (FT)	PANDUIT	C3LG6
12c	PANDUIT, TYPE F, 2" WIDE, 4" DEEP (FT)	PANDUIT	F2X4LG6
12d	PANDUIT, TYPE F, 2" WIDE COVER (FT)	PANDUIT	C2LG6
13	DIN RAIL PERFORATED, 35/15 HEAVY DUTY	PHEONIX CONTACT	NE 35/15 PERF 2000MM
14	PLUGTRAB SURGE SUPPRESSOR	PHEONIX CONTACT	PT 2-PE/S-120AC-ST
15	GROUND BUS BAR	EATON-CULTER HAMMER	GBK1420
19a	FUSE, 10A	BUSSMAN	AGC-10
19b	FUSE, 5A	BUSSMAN	AGC-5
19c	FUSE, 1A	BUSSMAN	AGC-1
20	FILTER FAN	RITTAL	RITTAL 3322.107
21	EXHAUST LOUVER	RITTAL	RITTAL 3322.207
22	ELECTRIC HEATER WITH BLOWER AND THERMOSTAT	HOFFMAN	DAH1002A
23a	PUSH BUTTON	SQUARE D	9001SKR1BH13
23b	PILOT LIGHT, RED	SQUARE D	9001SKT35LRR31
23c	PILOT LIGHT, GREEN	SQUARE D	9001SKT35LGG31
24	TOWER ALARM LIGHT	SQUARE D	XVC1B1K

NOTES:

PROJECT WORK SHOWN ON THIS DRAWING IS ALL INCLUDED IN SCHEDULE A

NAMEPLATES

NAME PLATE	LINE	TEXT	PLATE SIZE	LETTERING SIZE
1	1 2	MBR CONTROL PANEL LCP-2014	4 X 12	1-1/4" 1-1/4"
2	1	HORN SILENCE	1 X 3	3/16"
3	1	ALARM ALERT	1 X 3	3/16"
4	1	ALARM RESET	1 X 3	3/16"
5	1	LAMP TEST	1 X 3	3/16"
6	1	HMI	1 X 3	3/16"
7	1	SS	1 X 3	3/16"
8	1	PS1A	1 X 3	3/16"
9	1	PS1B	1 X 3	3/16"
10	1	PLC 1 RACK 1	1 X 3	3/16"
11	1	NOT USED	1 X 3	3/16"
12	1	120V	1 X 3	3/16"
13	1	R1,S1, DO	1 X 3	3/16"
14	1	120V, 20A GFI	1 X 3	3/16"
15	1	R1,S5 DI	1 X 3	3/16"
16	1	R1,S6 DI	1 X 3	3/16"
17	1	R1,S7 DI	1 X 3	3/16"
18	1	R1,S8 DI	1 X 3	3/16"
19	1	R1,S4 AO	1 X 3	3/16"
20	1	UPS RCPT	1 X 3	3/16"
21	1	R1,S2 AI	1 X 3	3/16"
22	1	R1,S3 AI	1 X 3	3/16"
23	1	24V (ISR)	1 X 3	3/16"
24	1	UPS	1 X 3	3/16"
25	1	PNL HTR	1 X 3	3/16"

	REVISIONS	DATE	BY
1	PLC PROCESSOR CHANGE	3-29-18	AS

DESIGNED J. VONDERAHE
DRAWN J. VONDERAHE
CHECKED J. MURPHY
APPROVED B. BUNKER

ONE INCH AT FULL SCALE. IF NOT, SCALE ACCORDINGLY

FILE NAME PS1598102-I251
JOB NO. 216-1598-102
DATE FEBRUARY 2018

ARTHUR G. STOKES STATE OF WASHINGTON 34736 REGISTERED PROFESSIONAL ENGINEER

MARCH 29, 2018

Parametrix
ENGINEERING . PLANNING . ENVIRONMENTAL SCIENCES
1019 39TH AVENUE SE, SUITE 100 | PUYALLUP, WA 98374
P 253.604.6600
WWW.PARAMETRIX.COM

PROJECT NAME
THE CONSOLIDATED BOROUGH OF QUIL CEDA VILLAGE
MBR TREATMENT FACILITY UPGRADE
TULALIP, WASHINGTON

LCP-2014 TERMINAL STRIP ASSEMBLIES AND BILL OF MATERIALS

DRAWING NO. 131 OF 157

I251

PATH: U:\PSO\Projects\Clients\1598-Tulalip Tribes\216-1598-102 MBR Upgrade\99Svcs\CADD\DWG
PLOTTED BY: milesdor DATE: Thursday, March 29, 2018 8:18:32 AM
LAYOUT: I251

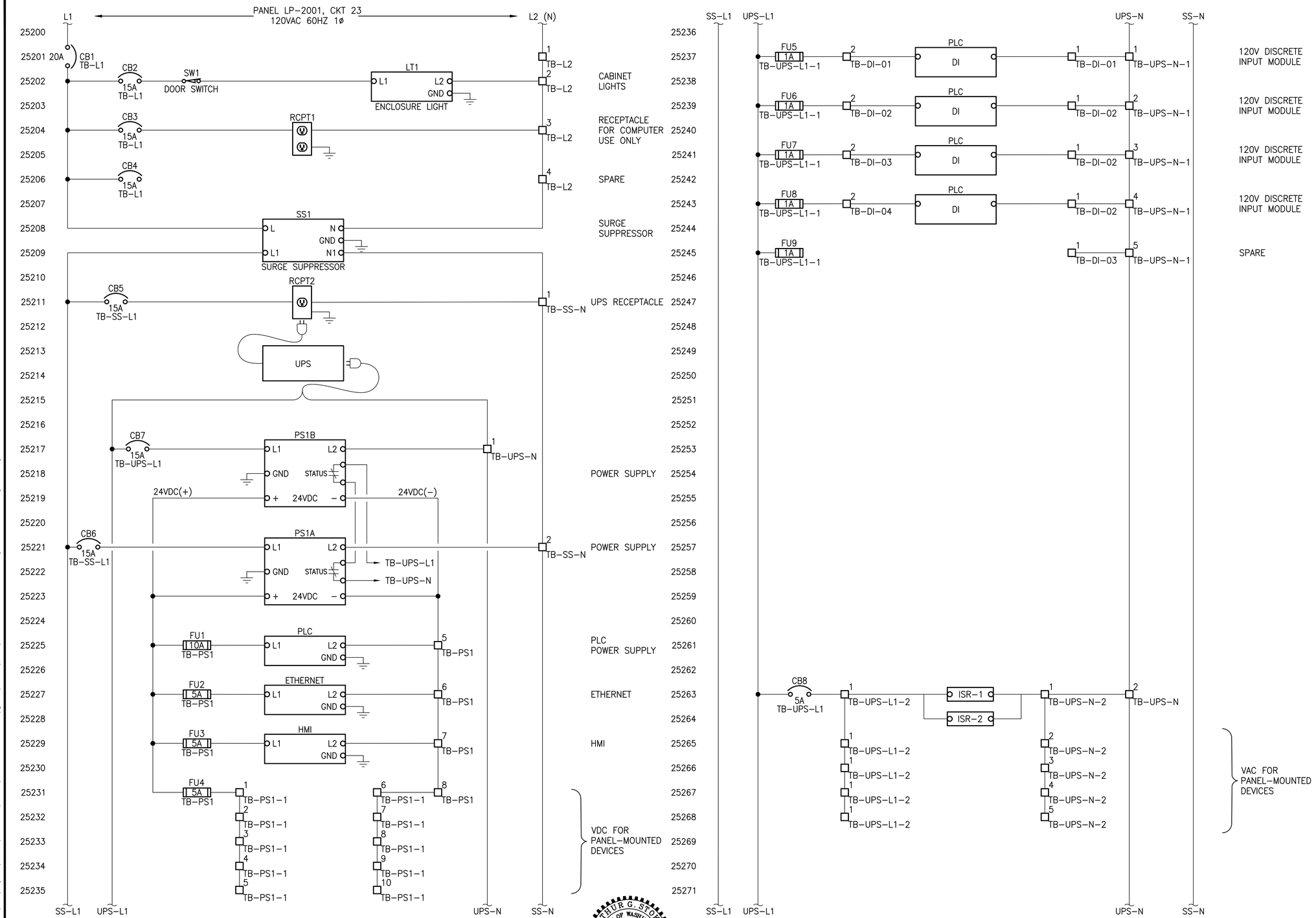

NOTES:

PROJECT WORK SHOWN ON THIS DRAWING IS ALL INCLUDED IN **SCHEDULE A**

REVISIONS	DATE	BY

DESIGNED J. VONDERAHE
DRAWN J. VONDERAHE
CHECKED J. MURPHY
APPROVED B. BUNKER

ONE INCH AT FULL SCALE. IF NOT, SCALE ACCORDINGLY
FILE NAME PS1598102-I252
JOB No. 216-1598-102
DATE FEBRUARY 2018

ARTHUR G. STOKES STATE OF WASHINGTON 34736 REGISTERED PROFESSIONAL ENGINEER

FEBRUARY 23, 2018

Parametrix
ENGINEERING . PLANNING . ENVIRONMENTAL SCIENCES
1019 39TH AVENUE SE, SUITE 100 | PUYALLUP, WA 98374
P 253.604.6600
WWW.PARAMETRIX.COM

PROJECT NAME
THE CONSOLIDATED BOROUGH OF QUIL CEDA VILLAGE
MBR TREATMENT FACILITY UPGRADE
TULALIP, WASHINGTON

LCP-2014 PANEL WIRING DIAGRAM

DRAWING NO. 132 OF 157
I252

PATH: U:\PSO\Projects\Clients\1598-TulalipTribes\216-1598-102 MBR Upgrade\99Svcs\CADD\DWG PLOTTED BY: vondejam DATE: Thursday, February 22, 2018 1:07:53 PM
LAYOUT: I252

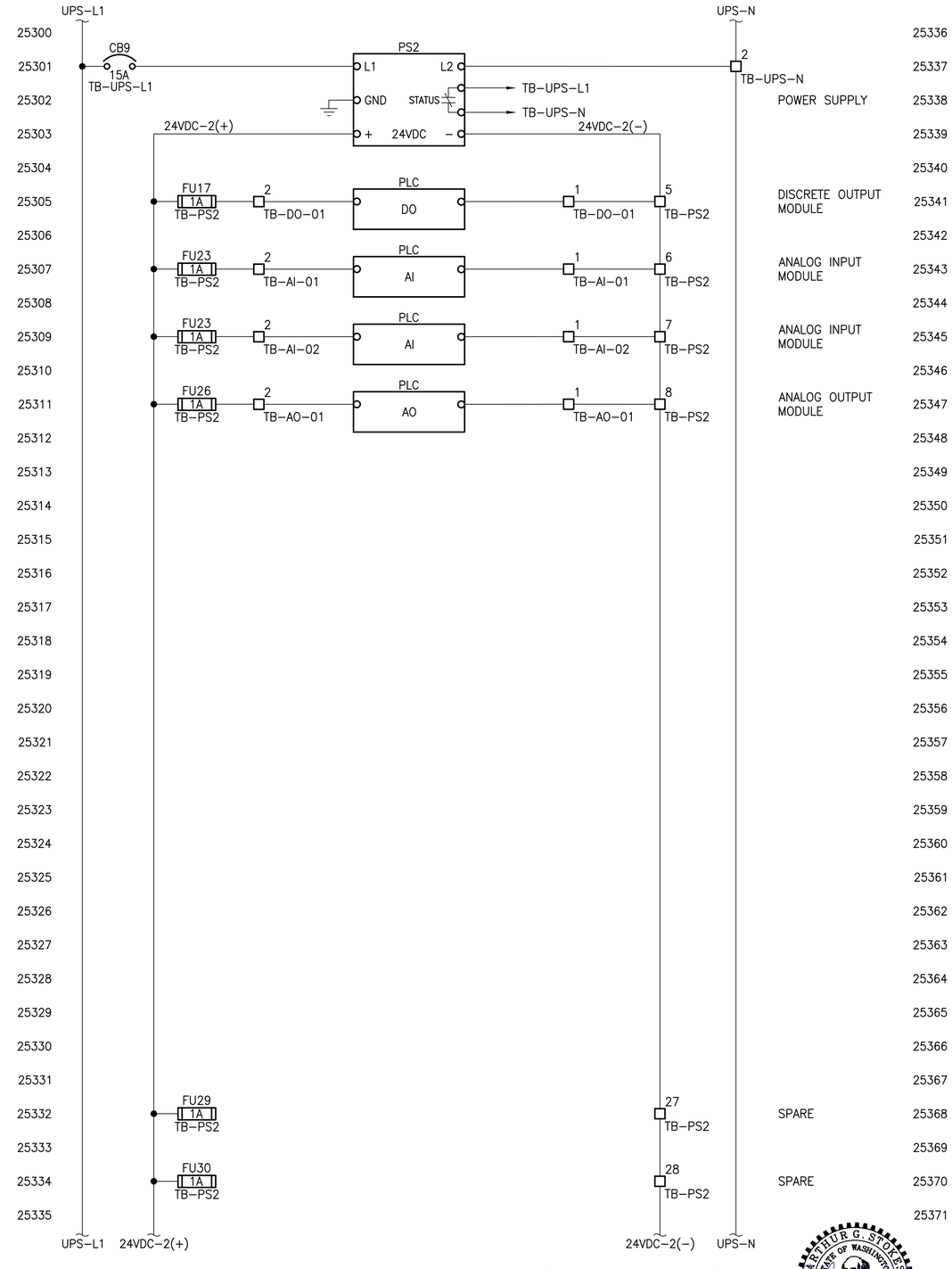

NOTES:

PROJECT WORK SHOWN ON THIS DRAWING IS ALL INCLUDED IN **SCHEDULE A**

PATH: U:\PSO\Projects\Clients\1598–TulalipTribes\216–1598–102 MBR Upgrade\99Svcs\CADD\DWG
PLOTTED BY: vondejam DATE: Thursday, February 22, 2018 1:19:15 PM
LAYOUT: I253

	REVISIONS	DATE	BY

DESIGNED J. VONDERAHE
DRAWN J. VONDERAHE
CHECKED J. MURPHY
APPROVED B. BUNKER

ONE INCH AT FULL SCALE. IF NOT, SCALE ACCORDINGLY

FILE NAME PS1598102–I253
JOB No. 216–1598–102
DATE FEBRUARY 2018

ARTHUR G. STOKES — STATE OF WASHINGTON — 34736 — REGISTERED PROFESSIONAL ENGINEER

FEBRUARY 23, 2018

Parametrix
ENGINEERING . PLANNING . ENVIRONMENTAL SCIENCES
1019 39TH AVENUE SE, SUITE 100 | PUYALLUP, WA 98374
P 253.604.6600
WWW.PARAMETRIX.COM

PROJECT NAME
THE CONSOLIDATED BOROUGH OF QUIL CEDA VILLAGE
MBR TREATMENT FACILITY UPGRADE
TULALIP, WASHINGTON

LCP-2014
PANEL WIRING DIAGRAM

DRAWING NO. 133 OF 157

I253

LCP-2014

DISTRIBUTION PANEL

PANEL LP-2001
CKT 23
NEUTRAL — N

FIELD

TERMINAL BLOCKS (120 VAC)

TB-L1

20A CB1	SS1-5
15A CB2	SW1-1
15A CB3	RCPT1-L
15A CB4	SPARE

TB-L2 (N)

1	SS1-1
2	LT1-N
3	RCPT1-N
4	SPARE

TB-SS-L1

SS1-6	15A CB5	RCPT2-L
	15A CB6	PS1A-L

TB-SS-N

SS1-2	1	RCPT2-N
	2	PS1A-N

TB-UPS-L1

UPS-L1	15A CB7	PS1B-L
TB-UPS-L1-1	5A CB8	TB-UPS-L1-2-1

TB-DI-XX-X	4	PS1A-13
	5	

TB-UPS-N

UPS-N	1	PS1B-N
	2	TB-UPS-N-2-1
TB-UPS-N-1	3	
TB-DI-XX-X	4	PS1B-14
	5	

TERMINAL BLOCKS (24 VDC)

TB-PS1

PS1A (+)	10A FU1	PLC-PS (+)
	5A FU2	ETHERNET (+)
	5A FU3	HMI (+)
PS1B (+)	5A FU4	TB-PS1-1-1
PS1A (-)	5	PLC-PS (-)
	6	ETHERNET (-)
	7	HMI (-)
PS1B (-)	8	TB-PS1-1-6

CONTINUED ON SHEET I264
CONTINUED ON SHEET I255
CONTINUED ON SHEET I256

SURGE SUPPRESSION

TB-L1-CB1 — 5 — 6 — TB-SS-L1-CB5
GND — 3 — SS1 — 4 — GND
TB-L2(N)-1 — 1 — 2 — TB-SS-N-1

PANEL EQUIPMENT POWER SUPPLY

TB-SS-L1-CB6 — L — 13 — TB-UPS-L1-4
TB-SS-N-2 — N — 14 — PS1B-13
PS1A
TB-PS1-FU1 — + — PE
TB-PS1-5 — -

TB-UPS-L1-CB7 — L — 13 — PS1A-14
TB-UPS-N-1 — N — 14 — TB-UPS-N-4
PS1B
TB-PS1-FU4 — + — PE
TB-PS1-8 — -

FIELD I/O POWER SUPPLY

PANEL COMPONENTS

TB-L1-CB2 — SW1 DOOR SWITCH — LT1 PANEL LIGHT (L, N)
TB-L2(N)-2

RCPT1 (L, N)
TB-L1-CB3
TB-L2(N)-3

RCPT2 (L, N)
TB-SS-L1-CB5
UPS
TB-SS-N-1

TB-PS1-FU1 — + — PLC POWER SUPPLY — PE
TB-PS1-5 — -

TB-PS1-FU2 — + — ETHERNET — PE
TB-PS1-6 — -

TB-PS1-FU3 — + — HMI — PE
TB-PS1-7 — -

TB-UPS-L1-2

TB-UPS-L1-CB8	1	ISR 1,2
	2	SPARE
	3	SPARE
	4	SPARE
	5	SPARE

TB-UPS-N-2

TB-UPS-N-1	1	ISR 1,2
	2	SPARE
	3	SPARE
	4	SPARE
	5	SPARE

TB-PS1-1

TB-PS1-FU4	1	SPARE
	2	SPARE
	3	SPARE
	4	SPARE
	5	SPARE
TB-PS1-8	6	SPARE
	7	SPARE
	8	SPARE
	9	SPARE
	10	SPARE

NOTES:

PROJECT WORK SHOWN ON THIS DRAWING IS ALL INCLUDED IN **SCHEDULE A**

LEGEND:

- WIRING INTERNAL TO PANEL
- FIELD WIRING
- [??] DEVICE TERMINAL
- [???] FEED-THROUGH TERMINAL IN PANEL
- SH [???] SHIELD TERMINAL IN PANEL
- [???] GROUND TERMINAL IN PANEL
- [?A ???] FUSE TERMINAL IN PANEL
- [?A ???] CIRCUIT BREAKER TERMINAL IN PANEL
- NC / CR??? C / NO — RELAY TERMINAL IN PANEL

	REVISIONS	DATE	BY

DESIGNED J. VONDERAHE
DRAWN J. VONDERAHE
CHECKED J. MURPHY
APPROVED B. BUNKER

ONE INCH AT FULL SCALE. IF NOT, SCALE ACCORDINGLY
FILE NAME PS1598102-I254
JOB No. 216-1598-102
DATE FEBRUARY 2018

ARTHUR G. STOKES — STATE OF WASHINGTON — 34736 — REGISTERED PROFESSIONAL ENGINEER
FEBRUARY 23, 2018

Parametrix
ENGINEERING . PLANNING . ENVIRONMENTAL SCIENCES
1019 39TH AVENUE SE, SUITE 100 | PUYALLUP, WA 98374
P 253.604.6600
WWW.PARAMETRIX.COM

PROJECT NAME
THE CONSOLIDATED BOROUGH OF QUIL CEDA VILLAGE
MBR TREATMENT FACILITY UPGRADE
TULALIP, WASHINGTON

LCP-2014
POWER WIRING SCHEMATIC

DRAWING NO. 134 OF 157
I254

PATH: U:\PSO\Projects\Clients\1598-TulalipTribes\216-1598-102 MBR Upgrade\99Svcs\CADD\DWG PLOTTED BY: vondejm DATE: Thursday, February 22, 2018 1:21:23 PM
LAYOUT: I254

LCP-2014

DISTRIBUTION PANEL	TERMINAL BLOCKS (120 VAC I/O)	SURGE SUPPRESSION	PANEL COMPONENTS

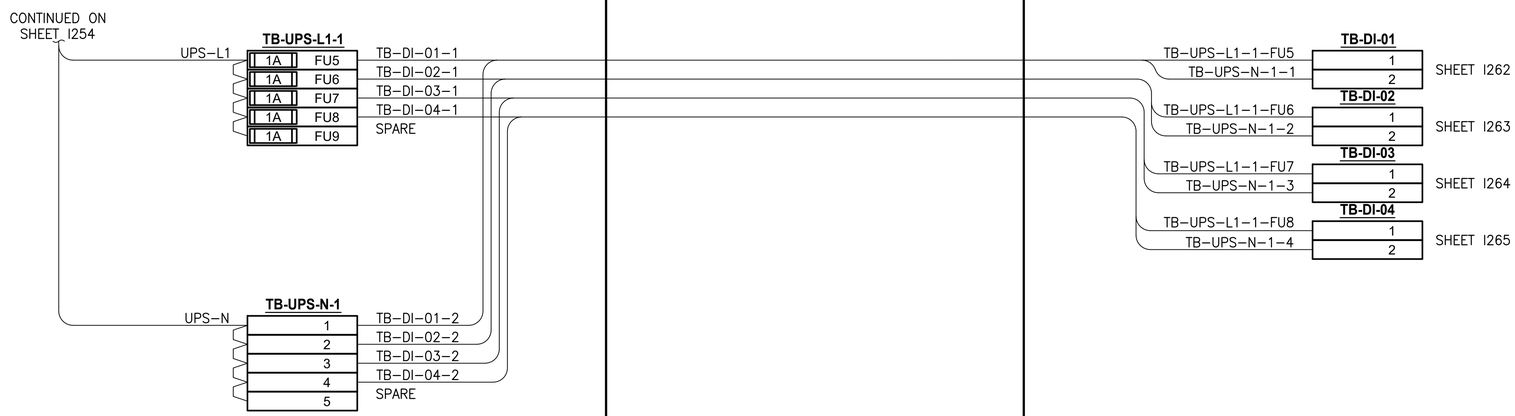

NOTES:

PROJECT WORK SHOWN ON THIS DRAWING IS ALL INCLUDED IN **SCHEDULE A**

LEGEND:

- WIRING INTERNAL TO PANEL
- FIELD WIRING
- [??] DEVICE TERMINAL
- [???] FEED–THROUGH TERMINAL IN PANEL
- [SH ???] SHIELD TERMINAL IN PANEL
- [⏚ ???] GROUND TERMINAL IN PANEL
- [?A ???] FUSE TERMINAL IN PANEL
- [?A ↷ ???] CIRCUIT BREAKER TERMINAL IN PANEL
- RELAY TERMINAL IN PANEL (NC / CR??? C / NO)

REVISIONS	DATE	BY

DESIGNED J. VONDERAHE
DRAWN J. VONDERAHE
CHECKED J. MURPHY
APPROVED B. BUNKER

ONE INCH AT FULL SCALE. IF NOT, SCALE ACCORDINGLY

FILE NAME PS1598102–I255
JOB No. 216–1598–102
DATE FEBRUARY 2018

ARTHUR G. STOKES — STATE OF WASHINGTON — 34736 — REGISTERED PROFESSIONAL ENGINEER

FEBRUARY 23, 2018

Parametrix
ENGINEERING . PLANNING . ENVIRONMENTAL SCIENCES
1019 39TH AVENUE SE, SUITE 100 | PUYALLUP, WA 98374
P 253.604.6600
WWW.PARAMETRIX.COM

PROJECT NAME
THE CONSOLIDATED BOROUGH OF QUIL CEDA VILLAGE
MBR TREATMENT FACILITY UPGRADE
TULALIP, WASHINGTON

LCP-2014 POWER WIRING SCHEMATIC

DRAWING NO. 135 OF 157
I255

PATH: U:\PSO\Projects\Clients\1598–TulalipTribes\216–1598–102 MBR Upgrade\99Svcs\CADD\DWG PLOTTED BY: vonde|pm DATE: Thursday, February 22, 2018 1:25:12 PM
LAYOUT: I255

LCP-2014

DISTRIBUTION PANEL	TERMINAL BLOCKS (24 VDC I/O)	SURGE SUPPRESSION	PANEL COMPONENTS

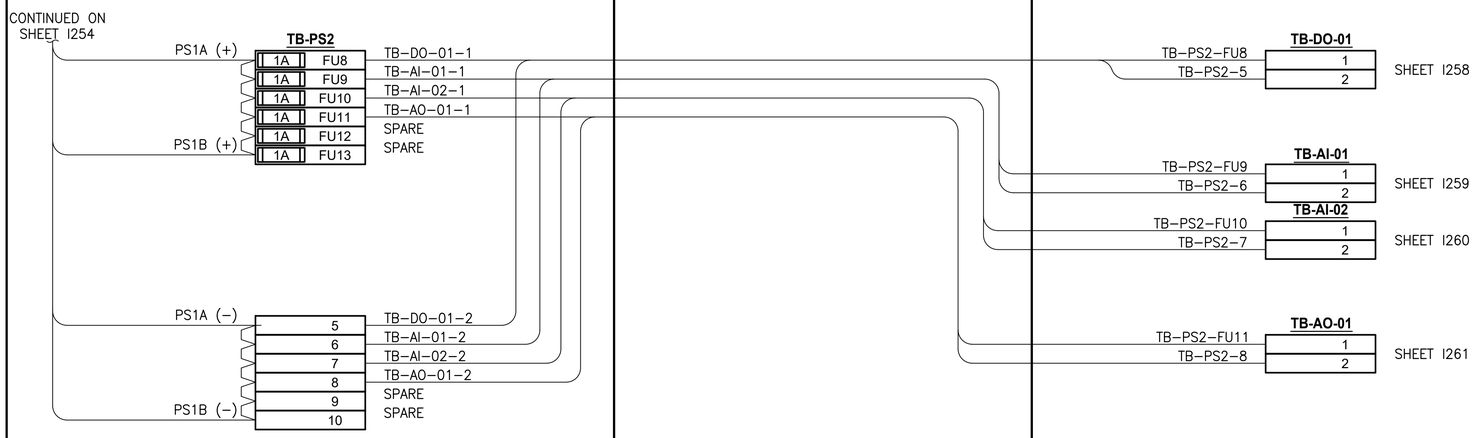

NOTES:

PROJECT WORK SHOWN ON THIS DRAWING IS ALL INCLUDED IN SCHEDULE A

LEGEND:

- WIRING INTERNAL TO PANEL
- FIELD WIRING
- ?? DEVICE TERMINAL
- ??? FEED-THROUGH TERMINAL IN PANEL
- SH ??? SHIELD TERMINAL IN PANEL
- ??? GROUND TERMINAL IN PANEL
- ?A ??? FUSE TERMINAL IN PANEL
- ?A ??? CIRCUIT BREAKER TERMINAL IN PANEL
- NC / CR??? C / NO RELAY TERMINAL IN PANEL

	REVISIONS	DATE	BY

DESIGNED J. VONDERAHE
DRAWN J. VONDERAHE
CHECKED J. MURPHY
APPROVED B. BUNKER

ONE INCH AT FULL SCALE. IF NOT, SCALE ACCORDINGLY

FILE NAME PS1598102-I256
JOB No. 216-1598-102
DATE FEBRUARY 2018

ARTHUR G. STOKES — STATE OF WASHINGTON — 34736 — REGISTERED PROFESSIONAL ENGINEER

FEBRUARY 23, 2018

Parametrix
ENGINEERING . PLANNING . ENVIRONMENTAL SCIENCES
1019 39TH AVENUE SE, SUITE 100 | PUYALLUP, WA 98374
P 253.604.6600
WWW.PARAMETRIX.COM

PROJECT NAME
THE CONSOLIDATED BOROUGH OF QUIL CEDA VILLAGE
MBR TREATMENT FACILITY UPGRADE
TULALIP, WASHINGTON

LCP-2014 POWER WIRING SCHEMATIC

DRAWING NO. 136 OF 157

I256

PATH: U:\PSO\Projects\Clients\1598-TulalipTribes\216-1598-102 MBR Upgrade\99Svcs\CADD\DWG PLOTTED BY: vonde.jam DATE: Thursday, February 22, 2018 1:27:18 PM
LAYOUT: I256

NOTES:

1. REFER TO SECTION 40 61 13 FOR SYSTEM INTEGRATOR SEQUENCING.

PROJECT WORK SHOWN ON THIS DRAWING IS ALL INCLUDED IN SCHEDULE A

RACK 01

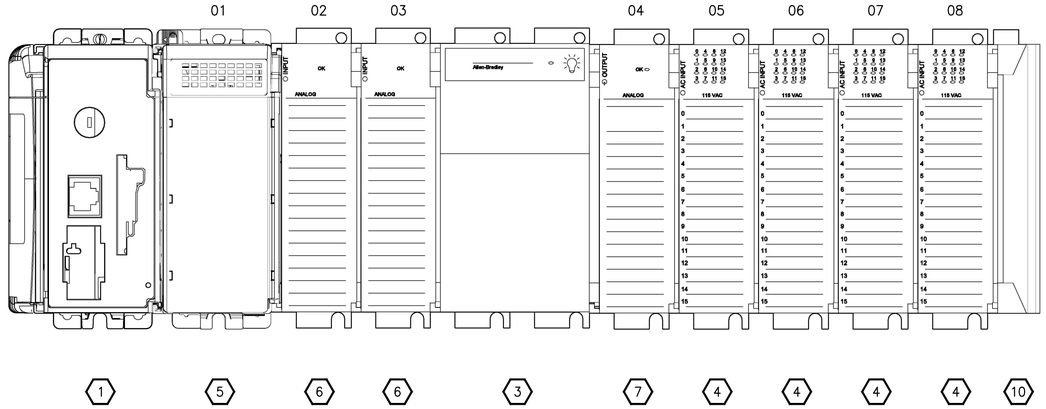

LCP-2014 RACK LAYOUT LEGEND		
1	1769-L36ERM (1)	COMPACTLOGIX CONTROLLER
2	NOT USED	
3	1769-PB4	POWER SUPPLY 24 VDC INPUT
4	1769-IA16	16 POINT 120 VAC INPUT MODULE
5	1769-OB16	16 POINT 24 VDC SOURCING OUTPUT MODULE
6	1769-IF16C	16 CHANNEL COMPACT HIGH-DENSITY ANALOG INPUT MODULE
7	1769-OF8C	8 CHANNEL ANALOG CURRENT OUTPUT MODULE
8	NOT USED	
9	NOT USED	
10	1769-ECR	RIGHT END CAP/TERMINATOR
11	NOT USED	

	REVISIONS	DATE	BY
1	PLC PROCESSOR CHANGE	3-29-18	AS

DESIGNED D. MILES
DRAWN D. MILES
CHECKED J. MURPHY
APPROVED B. BUNKER

ONE INCH AT FULL SCALE. IF NOT, SCALE ACCORDINGLY

FILE NAME PS1598102-I257
JOB No. 216-1598-102
DATE FEBRUARY 2018

ARTHUR G. STOKES — STATE OF WASHINGTON — 34736 — REGISTERED PROFESSIONAL ENGINEER

MARCH 29, 2018

Parametrix
ENGINEERING . PLANNING . ENVIRONMENTAL SCIENCES
1019 39TH AVENUE SE, SUITE 100 | PUYALLUP, WA 98374
P 253.604.6600
WWW.PARAMETRIX.COM

PROJECT NAME
THE CONSOLIDATED BOROUGH OF QUIL CEDA VILLAGE MBR TREATMENT FACILITY UPGRADE
TULALIP, WASHINGTON

LCP-2014 PLC RACK ASSEMBLY

DRAWING NO. 137 OF 157
I257

PATH: U:\PSO\Projects\Clients\1598-TulalipTribes\216-1598-102 MBR Upgrade\99Svcs\CADD\DWG PLOTTED BY: milesdr DATE: Thursday, March 29, 2018 8:29:08 AM
LAYOUT: I257

LCP-2014

PLC

24VDC
OUTPUT MODULE
CAT NO. 1769-OB16
16 DO

	+VDC	TB-PS2-FU8
V-2506 VALVE STOP	OUT 0	TB-DO-01-R0
V-2506 VALVE OPEN	OUT 1	TB-DO-01-R1
V-2506 VALVE CLOSE	OUT 2	TB-DO-01-R2
V-2606 VALVE STOP	OUT 3	TB-DO-01-R3
V-2606 VALVE OPEN	OUT 4	TB-DO-01-R4
V-2606 VALVE CLOSE	OUT 5	TB-DO-01-R5
SPARE	OUT 6	TB-DO-01-R6
P-2100 AUTO CALL	OUT 7	TB-DO-01-R7
P-2375 FAULT RESET	OUT 8	TB-DO-01-R8
P-2375 CALL	OUT 9	TB-DO-01-R9
P-2540 AUTO CALL	OUT 10	TB-DO-01-R10
P-2640 AUTO CALL	OUT 11	TB-DO-01-R11
SPARE	OUT 12	TB-DO-01-R12
SPARE	OUT 13	TB-DO-01-R13
SPARE	OUT 14	TB-DO-01-R14
SPARE	OUT 15	TB-DO-01-R15
	DC COM	TB-PS2-5

PLC: 03
RACK: 01
SLOT: 01

TERMINAL BLOCKS

TB-PS2 — TB-PS2-FU8, TB-PS2-5

TB-DO-01

	1	R01-S01-24V	
	2	R01-S01-COM	
R0	NC	R01-S01-DO0	V-2506-21448
	C		V-2506-21450
	NO		
R1	NC	R01-S01-DO1	V-2506-21452
	C		V-2506-21454
	NO		
R2	NC	R01-S01-DO2	
	C		V-2506-21456
	NO		
R3	NC	R01-S01-DO3	V-2606-21532
	C		V-2606-21534
	NO		
R4	NC	R01-S01-DO4	V-2606-21536
	C		V-2606-21538
	NO		
R5	NC	R01-S01-DO5	
	C		V-2606-21540
	NO		
R6	NC	R01-S01-DO6	
	C		
	NO		
R7	NC	R01-S01-DO7	P-2100-22000
	C		P-2100-22004
	NO		
R8	NC	R01-S01-DO8	22084
	C		22086
	NO		
R9	NC	R01-S01-DO9	2
	C		
	NO		22088
R10	NC	R01-S01-DO10	P-2540-XX
	C		P-2540-XX
	NO		
R11	NC	R01-S01-DO11	P-2640-XX
	C		P-2640-XX
	NO		
R12	NC	R01-S01-DO12	
	C		
	NO		
R13	NC	R01-S01-DO13	
	C		
	NO		
R14	NC	R01-S01-DO14	
	C		
	NO		
R15	NC	R01-S01-DO15	
	C		
	NO		

JUNCTION BOX OR PANEL MOUNTED DEVICES

V-2506-21448	LCP-2014-TB-DO-01-R0-11
V-2506-21450	LCP-2014-TB-DO-01-R0-14
V-2506-21452	LCP-2014-TB-DO-01-R1-11
V-2506-21454	LCP-2014-TB-DO-01-R1-14
V-2506-21456	LCP-2014-TB-DO-01-R2-14
V-2606-21532	LCP-2014-TB-DO-01-R3-11
V-2606-21534	LCP-2014-TB-DO-01-R3-14
V-2606-21536	LCP-2014-TB-DO-01-R4-11
V-2606-21538	LCP-2014-TB-DO-01-R4-14
V-2606-21540	LCP-2014-TB-DO-01-R5-14
P-2100-22000	LCP-2014-TB-DO-01-R7-11
P-2100-22004	LCP-2014-TB-DO-01-R7-14
P-2540-XX	LCP-2014-TB-DO-01-R10-11
P-2540-XX	LCP-2014-TB-DO-01-R10-14
P-2640-XX	LCP-2014-TB-DO-01-R11-11
P-2640-XX	LCP-2014-TB-DO-01-R11-14

FIELD

FOR THIS DRAWING, ONLY PROJECT WORK INSIDE THIS BOX IS INCLUDED IN **SCHEDULE B**

21448	120 VAC VALVE STOP	MBR #1 AIR CONTROL VALVE V-2506	
21450			
21452	VAC VALVE OPEN		
21454			
21456	VALVE CLOSE		
21532	120 VAC VALVE STOP	MBR #4 AIR CONTROL VALVE V-2606	
21534			
21536	VAC VALVE OPEN		
21538			
21540	VALVE CLOSE		
22000	(+) RUN	MIXED LIQUOR RECYCLE PUMP #1 P-2100	3
22004			
22084	(+) FAULT RESET	MIXED LIQUOR RECYCLE PUMP #4 P-2375	
22086			
22088	RUN		
XX	(+) RUN	PERMEATE PUMP 1 P-2540	3
XX			
XX	(+) RUN	PERMEATE PUMP 4 P-2640	3
XX			

ALL PROJECT WORK OUTSIDE THE BOX NOTED FOR SCHEDULE B, SHALL BE **SCHEDULE A**

NOTES:

1. CONTRACTOR TO COORDINATE ACTUAL TERMINAL NUMBER FOR WIRE TAGS BASED ON EQUIPMENT PROVIDED.
2. CONTRACTOR TO VERIFY CABLE LENGTH TO EXISTING EQUIPMENT. IF NOT LONG ENOUGH TO REACH LCP-2014, SPLICES ARE APPROVED PER SPECIFICATIONS.
3. REFER TO SHEET E10 FOR TYPICAL VFD ELEMENTARY DIAGRAM.

LEGEND:

- WIRING INTERNAL TO PANEL
- FIELD WIRING
- [??] DEVICE TERMINAL
- [???] FEED-THROUGH TERMINAL IN PANEL
- SH [???] SHIELD TERMINAL IN PANEL
- [???] GROUND TERMINAL IN PANEL
- [?A] [???] FUSE TERMINAL IN PANEL
- ?A [???] CIRCUIT BREAKER TERMINAL IN PANEL
- NC / CR??? C / NO RELAY TERMINAL IN PANEL

PATH: U:\PSO\Projects\Clients\1598-TulalipTribes\216-1598-102 MBR Upgrade\99Svcs\CADD\DWG
PLOTTED BY: vondejpm DATE: Thursday, February 22, 2018 1:32:36 PM
LAYOUT: I258

	REVISIONS	DATE	BY

DESIGNED J. VONDERAHE
DRAWN J. VONDERAHE
CHECKED J. MURPHY
APPROVED B. BUNKER

ONE INCH AT FULL SCALE. IF NOT, SCALE ACCORDINGLY
FILE NAME PS1598102-I258
JOB No. 216-1598-102
DATE FEBRUARY 2018

ARTHUR G. STOKES — STATE OF WASHINGTON — 34736 — REGISTERED PROFESSIONAL ENGINEER
FEBRUARY 23, 2018

Parametrix
ENGINEERING . PLANNING . ENVIRONMENTAL SCIENCES
1019 39TH AVENUE SE, SUITE 100 | PUYALLUP, WA 98374
P 253.604.6600
WWW.PARAMETRIX.COM

PROJECT NAME
THE CONSOLIDATED BOROUGH OF QUIL CEDA VILLAGE
MBR TREATMENT FACILITY UPGRADE
TULALIP, WASHINGTON

LCP-2014
PLC 3, RACK 1, SLOT 1
DISCRETE OUTPUTS

DRAWING NO. 138 OF 157
I258

FIELD

JUNCTION BOX OR PANEL MOUNTED DEVICES

LCP-2014

TERMINAL BLOCKS

PLC

FOR THIS DRAWING, ONLY PROJECT WORK INSIDE THIS BOX IS INCLUDED IN **SCHEDULE B**

TB-AI-01

mA CURRENT ANALOG INPUT MODULE CAT NO. 1769-IF16C 16 AI

	FIELD	JUNCTION BOX	TB-AI-01	TERMINAL BLOCKS	PLC
MIXED LIQUOR RECYCLE PUMP #1 P-2100 (3)	FREQUENCY XX(+) XX(-)	LCP-2014-TB-AI-01-4 / LCP-2014-TB-AI-01-5	P-2100-XX(+) / P-2100-XX(-)	4-20 mA	R01-S02-AI0 / R01-S02-COM	TB-AI-01-5 → IN0+	P-2100 SPEED REFERENCE
MBR #1 PRESSURE PIT-2517	PIT 2517 (+ / -)	LCP-2014-TB-AI-01-8 / LCP-2014-TB-AI-01-9	PIT-2517-(+) / PIT-2517-(-)	4-20 mA	R01-S02-AI1 / R01-S02-COM	TB-AI-01-8 → IN1+	PIT-2517 PRESSURE
MIXED LIQUOR RECYCLE PUMP #4 P-2375	FREQUENCY 26(+) 27(-)	23128 / 23130	4-20 mA	R01-S02-AI2 / R01-S02-COM	TB-AI-01-12 → IN2+	P-2375 FREQUENCY
	CURRENT 28(+) 29(-)	23132 / 23134	4-20 mA	R01-S02-AI3 / R01-S02-COM	TB-AI-01-16 → IN3+	P-2375 CURRENT
PERMEATE PUMP 1 P-2540 (3)	FREQUENCY XX(+) XX(-)	LCP-2014-TB-AI-01-20 / LCP-2014-TB-AI-01-21	P-2540-XX(+) / P-2540-XX(-)	4-20 mA	R01-S02-AI4 / R01-S02-COM	TB-AI-01-20 → IN4+	P-2540 SPEED REFERENCE
PERMEATE PUMP 2 P-2640 (3)	FREQUENCY XX(+) XX(-)	LCP-2014-TB-AI-01-24 / LCP-2014-TB-AI-01-25	P-2640-XX(+) / P-2640-XX(-)	4-20 mA	R01-S02-AI5 / R01-S02-COM	TB-AI-01-24 → IN5+	P-2640 SPEED REFERENCE
MIXED LIQUOR RECYCLE FLOW FROM MBR #1 FIT-2104 (4)	120 VAC FROM PNL XXX, CKT XXX (L N G) FIT 2104 (+ / -)	LCP-2014-TB-AI-01-28 / LCP-2014-TB-AI-01-29	FIT-2104-(+) / FIT-2104-(-)	4-20 mA	R01-S02-AI6 / R01-S02-COM	TB-AI-01-28 → IN6+	FIT-2104 FLOW (0-XX GPM)
MIXED LIQUOR RECYCLE FLOW FROM MBR #4 FIT-2311 (4)	120 VAC FROM PNL XXX, CKT XXX (L N G) FIT 2311 (+ / -)	LCP-2014-TB-AI-01-32 / LCP-2014-TB-AI-01-33	FIT-2311-(+) / FIT-2311-(-)	4-20 mA	R01-S02-AI7 / R01-S02-COM	TB-AI-01-32 → IN7+	FIT-2311 FLOW
						TB-AI-01-2 → COM	
						TB-AI-01-2 → COM	
MBR #1 UPPER CARTRIDGE PERMEATE TURBIDITY X-2504 (4)	120 VAC FROM PNL XXX, CKT XXX (L N G) X 2504 (+ / -)	LCP-2014-TB-AI-01-36 / LCP-2014-TB-AI-01-37	X-2504-(+) / X-2504-(-)	4-20 mA	R01-S02-AI8 / R01-S02-COM	TB-AI-01-36 → IN8+	X-2504 TURBIDITY
MBR #1 LOWER CARTRIDGE PERMEATE TURBIDITY X-2505 (4)	120 VAC FROM PNL XXX, CKT XXX (L N G) X 2505 (+ / -)	LCP-2014-TB-AI-01-40 / LCP-2014-TB-AI-01-41	X-2505-(+) / X-2505-(-)	4-20 mA	R01-S02-AI9 / R01-S02-COM	TB-AI-01-40 → IN9+	X-2505 TURBIDITY
					R01-S02-AI10 / R01-S02-COM	TB-AI-01-44 → IN10+	SPARE
MBR #1 UPPER CARTRIDGE PERMEATE FLOW FIT-2517 (4)	120 VAC FROM PNL XXX, CKT XXX (L N G) FIT 2517 (+ / -)	LCP-2014-TB-AI-01-48 / LCP-2014-TB-AI-01-49	FIT-2517-(+) / FIT-2517-(-)	4-20 mA	R01-S02-AI11 / R01-S02-COM	TB-AI-01-48 → IN11+	FIT-2517 FLOW
					R01-S02-AI12 / R01-S02-COM	TB-AI-01-52 → IN12+	SPARE
MBR #4 UPPER CARTRIDGE PERMEATE FLOW FIT-2617 (4)	120 VAC FROM PNL XXX, CKT XXX (L N G) FIT 2617 (+ / -)	LCP-2014-TB-AI-01-56 / LCP-2014-TB-AI-01-57	FIT-2617-(+) / FIT-2617-(-)	4-20 mA	R01-S02-AI13 / R01-S02-COM	TB-AI-01-56 → IN13+	FIT-2617 FLOW
					R01-S02-AI14 / R01-S02-COM	TB-AI-01-60 → IN14+	SPARE
MBR #1 TANK LEVEL LIT-2508	LIT 2508 (+ / -)	LCP-2014-TB-AI-01-64 / LCP-2014-TB-AI-01-65	LIT-2508-(+) / LIT-2508-(-)	4-20 mA	R01-S02-AI15 / R01-S02-COM	TB-AI-01-64 → IN15+	LIT-2508 MBR #1 TANK LEVEL (0-10FT)

PLC: 03
RACK: 01
SLOT: 02

ALL PROJECT WORK OUTSIDE THE BOX NOTED FOR SCHEDULE B, SHALL BE **SCHEDULE A**

NOTES:

1. 4-20mA SHIELD SHALL BE GROUNDED IN ONLY ONE LOCATION, AT THE PLC CONTROL PANEL GROUND BUS BAR.
2. 4-20mA SHIELD SHALL BE CUT BACK AND HEAT SHRINK APPLIED.
3. REFER TO SHEET E10 FOR TYPICAL VFD ELEMENTARY DIAGRAM.
4. CONTRACTOR TO COORDINATE POWER SOURCE FOR FIELD INSTRUMENTATION.

LEGEND:

- WIRING INTERNAL TO PANEL
- FIELD WIRING
- ?? DEVICE TERMINAL
- ??? FEED-THROUGH TERMINAL IN PANEL
- SH ??? SHIELD TERMINAL IN PANEL
- ??? GROUND TERMINAL IN PANEL
- ?A ??? FUSE TERMINAL IN PANEL
- ?A ??? CIRCUIT BREAKER TERMINAL IN PANEL
- NC / CR??? C / NO RELAY TERMINAL IN PANEL

PATH: U:\PSO\Projects\Clients\1598-TulalipTribes\216-1598-102 MBR Upgrade\99Svcs\CADD\DWG
DATE: Thursday, February 22, 2018 1:42:44 PM
PLOTTED BY: vonderahe
LAYOUT: I259

REVISIONS	DATE	BY

DESIGNED J. VONDERAHE
DRAWN J. VONDERAHE
CHECKED J. MURPHY
APPROVED B. BUNKER

ONE INCH AT FULL SCALE. IF NOT, SCALE ACCORDINGLY

FILE NAME PS1598102-I259
JOB No. 216-1598-102
DATE FEBRUARY 2018

ARTHUR G. STOKES — STATE OF WASHINGTON — 34738 — REGISTERED PROFESSIONAL ENGINEER

FEBRUARY 23, 2018

Parametrix
ENGINEERING . PLANNING . ENVIRONMENTAL SCIENCES
1019 39TH AVENUE SE, SUITE 100 | PUYALLUP, WA 98374
P 253.604.6600
WWW.PARAMETRIX.COM

PROJECT NAME
THE CONSOLIDATED BOROUGH OF QUIL CEDA VILLAGE
MBR TREATMENT FACILITY UPGRADE
TULALIP, WASHINGTON

LCP-2014
PLC 3, RACK 1, SLOT 2
ANALOG INPUTS

DRAWING NO.
139 OF 157

I259

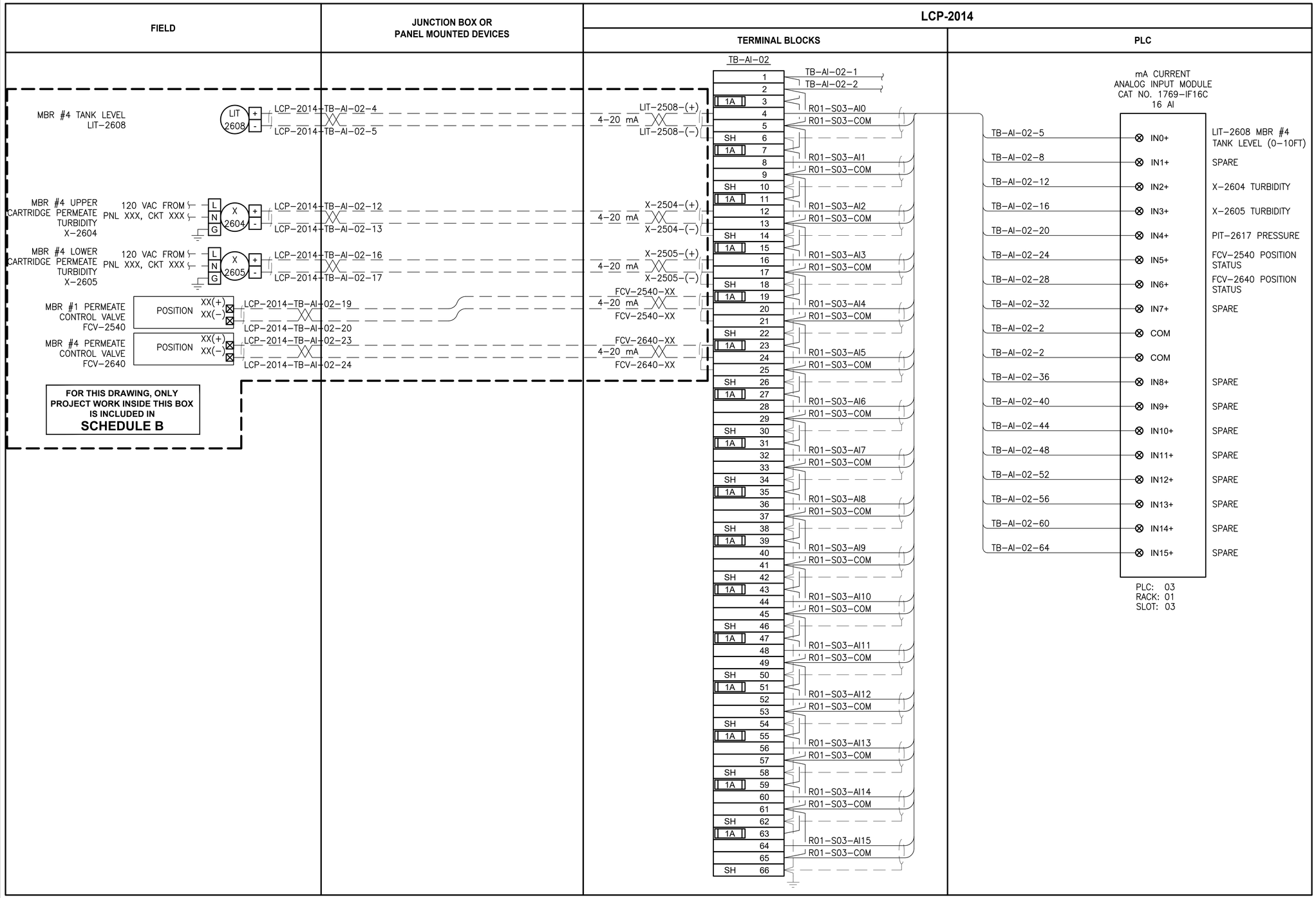

NOTES:

1. 4-20mA SHIELD SHALL BE GROUNDED IN ONLY ONE LOCATION, AT THE PLC CONTROL PANEL GROUND BUS BAR.
2. 4-20mA SHIELD SHALL BE CUT BACK AND HEAT SHRINK APPLIED.

ALL PROJECT WORK OUTSIDE THE BOX NOTED FOR SCHEDULE B, SHALL BE SCHEDULE A

LEGEND:

- WIRING INTERNAL TO PANEL
- FIELD WIRING
- ?? DEVICE TERMINAL
- ??? FEED-THROUGH TERMINAL IN PANEL
- SH ??? SHIELD TERMINAL IN PANEL
- ??? GROUND TERMINAL IN PANEL
- ?A ??? FUSE TERMINAL IN PANEL
- ?A ??? CIRCUIT BREAKER TERMINAL IN PANEL
- NC CR??? C NO RELAY TERMINAL IN PANEL

REVISIONS	DATE	BY

DESIGNED J. VONDERAHE
DRAWN J. VONDERAHE
CHECKED J. MURPHY
APPROVED B. BUNKER

ONE INCH AT FULL SCALE. IF NOT, SCALE ACCORDINGLY
FILE NAME PS1598102-I260
JOB No. 216-1598-102
DATE FEBRUARY 2018

ARTHUR G. STOKES STATE OF WASHINGTON 34736 REGISTERED PROFESSIONAL ENGINEER
FEBRUARY 23, 2018

Parametrix
ENGINEERING . PLANNING . ENVIRONMENTAL SCIENCES
1019 39TH AVENUE SE, SUITE 100 | PUYALLUP, WA 98374
P 253.604.6600
WWW.PARAMETRIX.COM

PROJECT NAME
THE CONSOLIDATED BOROUGH OF QUIL CEDA VILLAGE
MBR TREATMENT FACILITY UPGRADE
TULALIP, WASHINGTON

LCP-2014 PLC 3, RACK 1, SLOT 3 ANALOG INPUTS

DRAWING NO. 140 OF 157
I260

LAYOUT: I260 PATH: U:\PSO\Projects\Clients\1598-TulalipTribes\216-1598-102 MBR Upgrade\99Svcs\CADD\DWG PLOTTED BY: vondejam DATE: Thursday, February 22, 2018 2:40:28 PM

LCP-2014

PLC

mA CURRENT
ANALOG OUTPUT MODULE
CAT NO. 1769-OF8C
8 AO

	ANLG COM	TB-AO-01-3
P-2100 SPEED COMMAND	I OUT 0+	TB-AO-01-4
	ANLG COM	TB-AO-01-7
P-2375 SPEED SET POINT	I OUT 1+	TB-AO-01-6
	ANLG COM	TB-AO-01-10
P-2540 SPEED COMMAND	I OUT 2+	TB-AO-01-9
	ANLG COM	TB-AO-01-13
P-2640 SPEED COMMAND	I OUT 3+	TB-AO-01-12
	ANLG COM	TB-AO-01-16
FCV-2540 FLOW SETPOINT	I OUT 4+	TB-AO-01-15
	ANLG COM	TB-AO-01-19
FCV-2640 FLOW SETPOINT	I OUT 5+	TB-AO-01-18
	ANLG COM	TB-AO-01-22
SPARE	I OUT 6+	TB-AO-01-21
	ANLG COM	TB-AO-01-25
SPARE	I OUT 7+	TB-AO-01-24
	DC NEUT	TB-AO-01-2
	+24V DC	TB-AO-01-1

PLC: 03
RACK: 01
SLOT: 04

TERMINAL BLOCKS

TB-PS2-FU11
TB-PS2-08

TB-AO-01

R04-S01-24V		1
R04-S01-COM		2
R04-S01-AO0		3
R04-S01-COM		4
	SH	5
R04-S01-AO1		6
R04-S01-COM		7
	SH	8
R04-S01-AO2		9
R04-S01-COM		10
	SH	11
R04-S01-AO3		12
R04-S01-COM		13
	SH	14
R04-S01-AO4		15
R04-S01-COM		16
	SH	17
R04-S01-AO5		18
R04-S01-COM		19
	SH	20
R04-S01-AO6		21
R04-S01-COM		22
	SH	23
R04-S01-AO7		24
R04-S01-COM		25
	SH	26

JUNCTION BOX OR PANEL MOUNTED DEVICES

P-2100-XX	4-20 mA	P-2100-XX
24066	4-20 mA	24068 (3)
P-2540-XX	4-20 mA	P-2540-XX
P-2640-XX	4-20 mA	P-2640-XX
FCV-2540-XX	4-20 mA	FCV-2540-XX
FCV-2640-XX	4-20 mA	FCV-2640-XX

FIELD

FOR THIS DRAWING, ONLY PROJECT WORK INSIDE THIS BOX IS INCLUDED IN **SCHEDULE B**

LCP-2014-TB-AO-01-03	XX(+) XX(-) SPEED COMMAND	MIXED LIQUOR RECYCLE PUMP #1 P-2100	(4)
LCP-2014-TB-AO-01-04	24066(+) 24068(-) SPEED SET-POINT	MIXED LIQUOR RECYCLE PUMP #4 P-2375	
LCP-2014-TB-AO-01-9	XX(+) XX(-) SPEED COMMAND	PERMEATE PUMP 1 P-2540	(4)
LCP-2014-TB-AO-01-10			
LCP-2014-TB-AO-01-12	XX(+) XX(-) SPEED COMMAND	PERMEATE PUMP 4 P-2640	(4)
LCP-2014-TB-AO-01-13			
LCP-2014-TB-AO-01-15	XX(+) XX(-) FLOW SETPOINT	MBR #1 PERMEATE FLOW CONTROL VALVE FCV-2540	(5)
LCP-2014-TB-AO-01-16			
LCP-2014-TB-AO-01-18	XX(+) XX(-) FLOW SETPOINT	MBR #4 PERMEATE FLOW CONTROL VALVE FCV-2640	(5)
LCP-2014-TB-AO-01-19			

ALL PROJECT WORK OUTSIDE THE BOX NOTED FOR SCHEDULE B, SHALL BE **SCHEDULE A**

NOTES:

1. 4-20mA SHIELD SHALL BE GROUNDED IN ONLY ONE LOCATION, AT THE PLC CONTROL PANEL GROUND BUS BAR.
2. 4-20mA SHIELD SHALL BE CUT BACK AND HEAT SHRINK APPLIED.
3. CONTRACTOR TO VERIFY CABLE LENGTH TO EXISTING EQUIPMENT. IF NOT LONG ENOUGH TO REACH LCP-2014, SPLICES ARE APPROVED PER SPECIFICATIONS.
4. REFER TO SHEET E10 FOR TYPICAL VFD ELEMENTARY DIAGRAM.

LEGEND:

- WIRING INTERNAL TO PANEL
- FIELD WIRING
- [??] DEVICE TERMINAL
- [???] FEED-THROUGH TERMINAL IN PANEL
- [SH ???] SHIELD TERMINAL IN PANEL
- [⏚ ???] GROUND TERMINAL IN PANEL
- [?A ???] FUSE TERMINAL IN PANEL
- [?A ↷ ???] CIRCUIT BREAKER TERMINAL IN PANEL
- RELAY TERMINAL IN PANEL (NC / CR??? C / NO)

PATH: U:\PSO\Projects\Clients\1598-TulalipTribes\216-1598-102 MBR Upgrade\99Svcs\CADD\DWG
PLOTTED BY: vondejpm DATE: Thursday, February 22, 2018 2:03:59 PM
LAYOUT: I261

	REVISIONS	DATE	BY

DESIGNED J. VONDERAHE
DRAWN J. VONDERAHE
CHECKED J. MURPHY
APPROVED B. BUNKER

ONE INCH AT FULL SCALE. IF NOT, SCALE ACCORDINGLY

FILE NAME PS1598102-I261
JOB No. 216-1598-102
DATE FEBRUARY 2018

ARTHUR G. STOKES — STATE OF WASHINGTON — 34736 — REGISTERED PROFESSIONAL ENGINEER

FEBRUARY 23, 2018

Parametrix
ENGINEERING . PLANNING . ENVIRONMENTAL SCIENCES
1019 39TH AVENUE SE, SUITE 100 | PUYALLUP, WA 98374
P 253.604.6600
WWW.PARAMETRIX.COM

PROJECT NAME
THE CONSOLIDATED BOROUGH OF QUIL CEDA VILLAGE
MBR TREATMENT FACILITY UPGRADE
TULALIP, WASHINGTON

LCP-2014
PLC 3, RACK 1, SLOT 4
ANALOG OUTPUTS

DRAWING NO. 141 OF 157

I261

FIELD | JUNCTION BOX OR PANEL MOUNTED DEVICES | LCP-2014 (TERMINAL BLOCKS | PLC)

FOR THIS DRAWING, ONLY PROJECT WORK INSIDE THIS BOX IS INCLUDED IN SCHEDULE B

MBR #1 PLUG VALVE V-2503

CLOSED	01–03	LCP-2014-TB-DI-01-3	V-2503-01	1	TB-UPS-L1-1-FU5
		LCP-2014-TB-DI-01-4	V-2503-03	2	TB-UPS-N-1-1
				3	
OPEN	05–06	LCP-2014-TB-DI-01-6	V-2503-06	4	R01-S05-DI0
			V-2603-01	5	R01-S05-DI1
			V-2603-03	6	
				7	R01-S05-DI2
			V-2603-06	8	
			V-2506-XX	9	R01-S05-DI3
			V-2506-XX	10	
				11	R01-S05-DI4
			V-2506-XX	12	
			V-2506-XX	13	R01-S05-DI5
				14	
			V-2506-XX	15	R01-S05-DI6
			V-2506-XX	16	
				17	R01-S05-DI7
				18	R01-S05-COM
			V-2506-XX	19	
				20	R01-S05-DI8
				21	
				22	R01-S05-DI9
				23	
				24	R01-S05-DI10
			V-2606-XX	25	
			V-2606-XX	26	R01-S05-DI11
				27	
			V-2606-XX	28	R01-S05-DI12
				29	
			V-2606-XX	30	R01-S05-DI13
				31	
			V-2606-XX	32	R01-S05-DI14
				33	
			V-2606-XX	34	R01-S05-DI15
				35	R01-S05-COM
				36	

MBR #4 PLUG VALVE V-2603

CLOSED	01–03	LCP-2014-TB-DI-01-7			
		LCP-2014-TB-DI-01-8			
OPEN	05–06	LCP-2014-TB-DI-01-10			

MBR #1 AIR CONTROL VALVE V-2506

COM	XX	LCP-2014-TB-DI-01-11			
CONTROL POWER AVAIL	XX	LCP-2014-TB-DI-01-12			
FIELD STOP	XX	LCP-2014-TB-DI-01-14			
REMOTE STATUS	XX	LCP-2014-TB-DI-01-16			
VALVE OPEN	XX	LCP-2014-TB-DI-01-18			
VALVE CLOSED	XX	LCP-2014-TB-DI-01-21			

MBR #4 AIR CONTROL VALVE V-2606

COM	XX	LCP-2014-TB-DI-01-26			
CONTROL POWER AVAIL	XX	LCP-2014-TB-DI-01-27			
FIELD STOP	XX	LCP-2014-TB-DI-01-29			
REMOTE STATUS	XX	LCP-2014-TB-DI-01-31			
VALVE OPEN	XX	LCP-2014-TB-DI-01-33			
VALVE CLOSED	XX	LCP-2014-TB-DI-01-35			

TB-DI-01

120VAC INPUT DIGITAL INPUT MODULE CAT NO. 1769-IA16 16 DI

TB-DI-01-5	IN 0	V-2503 CLOSED STATUS	
TB-DI-01-7	IN 1	V-2503 OPEN STATUS	
TB-DI-01-9	IN 2	V-2603 CLOSED STATUS	
TB-DI-01-11	IN 3	V-2603 OPEN STATUS	
TB-DI-01-13	IN 4	V-2506 CONTROL POWER AVAILABLE	
TB-DI-01-15	IN 5	V-2506 FIELD STOP	
TB-DI-01-17	IN 6	V-2506 REMOTE POSITION	
TB-DI-01-19	IN 7	V-2506 OPEN STATUS	
TB-DI-01-2	AC COM		
TB-DI-01-22	IN 8	V-2506 CLOSED STATUS	
TB-DI-01-24	IN 9	SPARE	
TB-DI-01-26	IN 10	SPARE	
TB-DI-01-28	IN 11	V-2606 CONTROL POWER AVAILABLE	
TB-DI-01-30	IN 12	V-2606 FIELD STOP	
TB-DI-01-32	IN 13	V-2606 REMOTE POSITION	
TB-DI-01-14	IN 14	V-2606 OPEN STATUS	
TB-DI-01-36	IN 15	V-2606 CLOSED STATUS	
TB-DI-01-2	AC COM		

PLC: 03
RACK: 01
SLOT: 05

NOTES:

ALL PROJECT WORK OUTSIDE THE BOX NOTED FOR SCHEDULE B, SHALL BE SCHEDULE A

LEGEND:

- WIRING INTERNAL TO PANEL
- FIELD WIRING
- [??] DEVICE TERMINAL
- [???] FEED-THROUGH TERMINAL IN PANEL
- [SH] [???] SHIELD TERMINAL IN PANEL
- [⏚] [???] GROUND TERMINAL IN PANEL
- [?A] [???] FUSE TERMINAL IN PANEL
- [?A] [???] CIRCUIT BREAKER TERMINAL IN PANEL
- NC / CR??? C / NO RELAY TERMINAL IN PANEL

PATH: U:\PSO\Projects\Clients\1598-TulalipTribes\216-1598-102 MBR Upgrade\99Svcs\CADD\DWG
PLOTTED BY: vondejam DATE: Thursday, February 22, 2018 2:10:45 PM
LAYOUT: I262

	REVISIONS	DATE	BY

DESIGNED J. VONDERAHE
DRAWN J. VONDERAHE
CHECKED J. MURPHY
APPROVED B. BUNKER

ONE INCH AT FULL SCALE. IF NOT, SCALE ACCORDINGLY
FILE NAME PS1598102-I262
JOB No. 216-1598-102
DATE FEBRUARY 2018

ARTHUR G. STOKES — STATE OF WASHINGTON — 34736 — REGISTERED PROFESSIONAL ENGINEER
FEBRUARY 23, 2018

Parametrix
ENGINEERING . PLANNING . ENVIRONMENTAL SCIENCES
1019 39TH AVENUE SE, SUITE 100 | PUYALLUP, WA 98374
P 253.604.6600
WWW.PARAMETRIX.COM

PROJECT NAME
THE CONSOLIDATED BOROUGH OF QUIL CEDA VILLAGE MBR TREATMENT FACILITY UPGRADE
TULALIP, WASHINGTON

LCP-2014 PLC 3, RACK 1, SLOT 5 DISCRETE INPUTS

DRAWING NO. 142 OF 157

I262

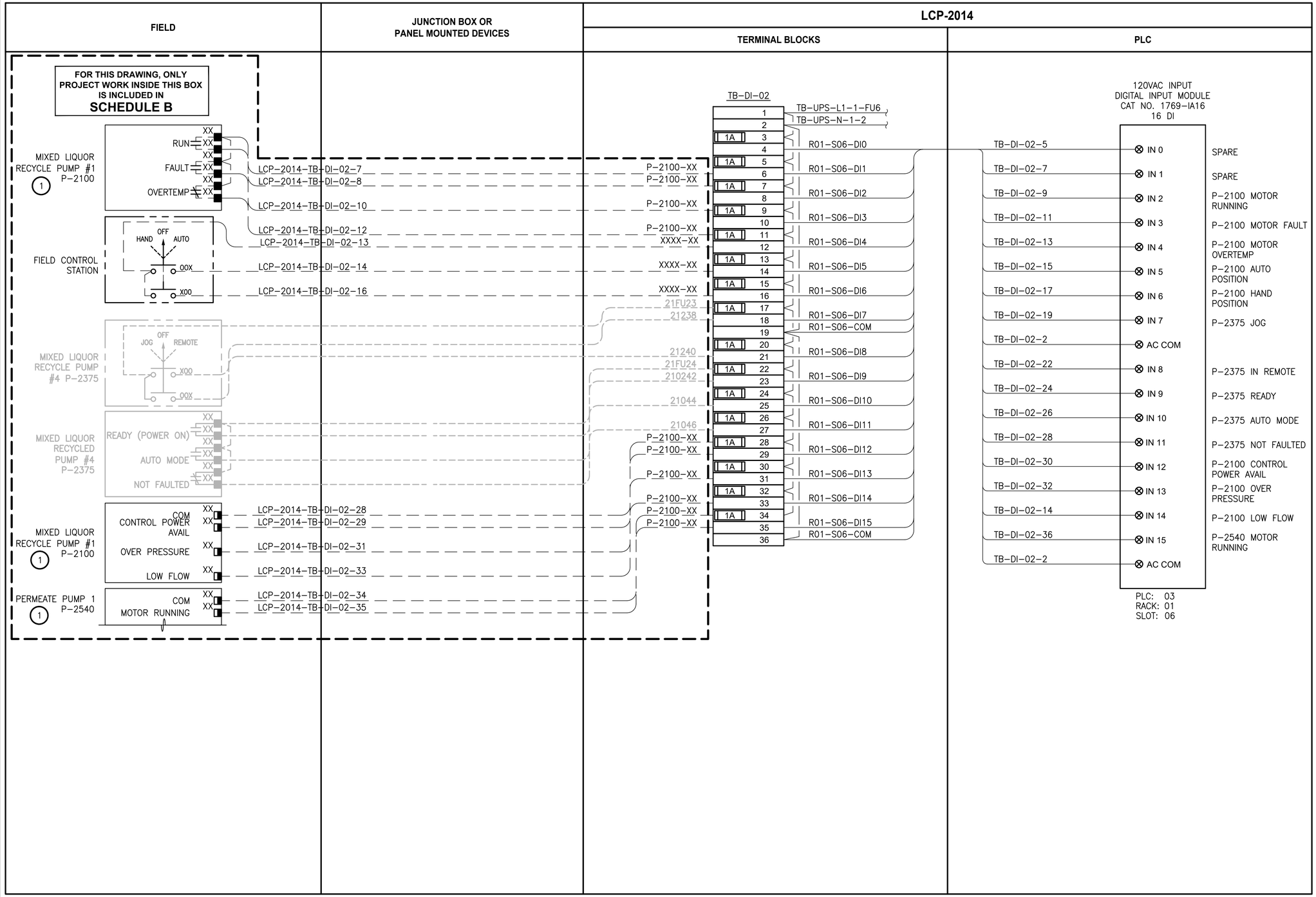

NOTES:

1. REFER TO SHEET E10 FOR TYPICAL VFD ELEMENTARY DIAGRAM.

ALL PROJECT WORK OUTSIDE THE BOX NOTED FOR SCHEDULE B, SHALL BE **SCHEDULE A**

LEGEND:

- WIRING INTERNAL TO PANEL
- FIELD WIRING
- ?? DEVICE TERMINAL
- ??? FEED-THROUGH TERMINAL IN PANEL
- SH ??? SHIELD TERMINAL IN PANEL
- ??? GROUND TERMINAL IN PANEL
- ?A ??? FUSE TERMINAL IN PANEL
- ?A ??? CIRCUIT BREAKER TERMINAL IN PANEL
- NC CR??? C NO RELAY TERMINAL IN PANEL

REVISIONS	DATE	BY

DESIGNED J. VONDERAHE
DRAWN J. VONDERAHE
CHECKED J. MURPHY
APPROVED B. BUNKER

ONE INCH AT FULL SCALE. IF NOT, SCALE ACCORDINGLY
FILE NAME PS1598102-I263
JOB No. 216-1598-102
DATE FEBRUARY 2018

ARTHUR G. STOKES STATE OF WASHINGTON 34736 REGISTERED PROFESSIONAL ENGINEER
FEBRUARY 23, 2018

Parametrix
ENGINEERING . PLANNING . ENVIRONMENTAL SCIENCES
1019 39TH AVENUE SE, SUITE 100 | PUYALLUP, WA 98374
P 253.604.6600
WWW.PARAMETRIX.COM

PROJECT NAME
THE CONSOLIDATED BOROUGH OF QUIL CEDA VILLAGE
MBR TREATMENT FACILITY UPGRADE
TULALIP, WASHINGTON

LCP-2014
PLC 3, RACK 1, SLOT 6
DISCRETE INPUTS

DRAWING NO. 143 OF 157
I263

PATH: U:\PSO\Projects\Clients\1598-TulalipTribes\216-1598-102 MBR Upgrade\99Svcs\CADD\DWG PLOTTED BY: vondejam DATE: Thursday, February 22, 2018 2:15:05 PM
LAYOUT: I263

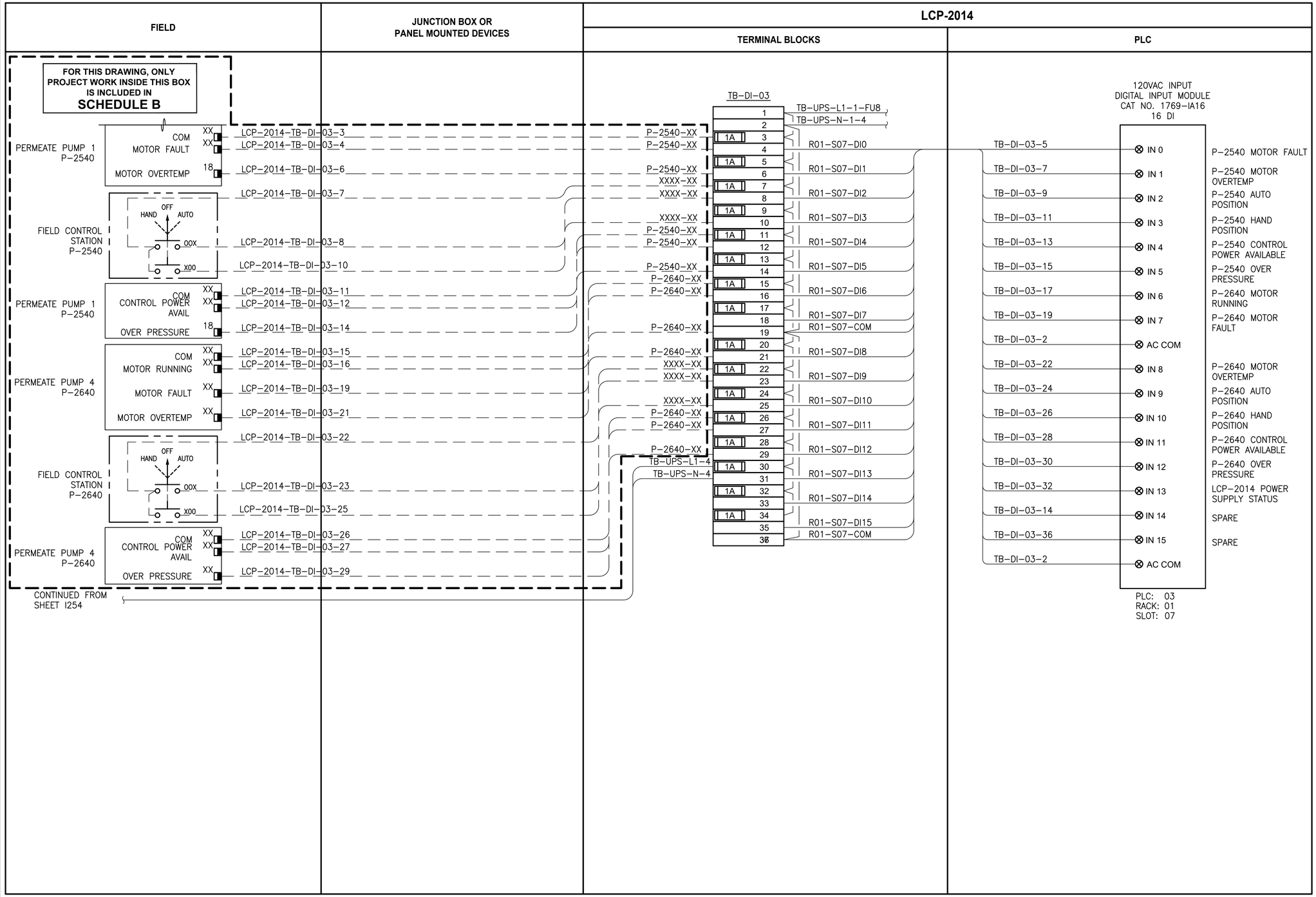

NOTES:

1. REFER TO SHEET E10 FOR TYPICAL VFD ELEMENTARY DIAGRAM.

ALL PROJECT WORK OUTSIDE THE BOX NOTED FOR SCHEDULE B, SHALL BE **SCHEDULE A**

LEGEND:

- WIRING INTERNAL TO PANEL
- FIELD WIRING
- ?? DEVICE TERMINAL
- ??? FEED-THROUGH TERMINAL IN PANEL
- SH ??? SHIELD TERMINAL IN PANEL
- ??? GROUND TERMINAL IN PANEL
- ?A ??? FUSE TERMINAL IN PANEL
- ?A ??? CIRCUIT BREAKER TERMINAL IN PANEL
- NC / CR??? C / NO RELAY TERMINAL IN PANEL

PATH: U:\PSO\Projects\Clients\1598-TulalipTribes\216-1598-102 MBR Upgrade\99Svcs\CADD\DWG
LAYOUT: I264
PLOTTED BY: vondejpm DATE: Thursday, February 22, 2018 2:18:43 PM

	REVISIONS	DATE	BY

DESIGNED D. MILES
DRAWN D. MILES
CHECKED J. MURPHY
APPROVED B. BUNKER

ONE INCH AT FULL SCALE. IF NOT, SCALE ACCORDINGLY
FILE NAME PS1598102-I264
JOB No. 216-1598-102
DATE FEBRUARY 2018

ARTHUR G. STOKES — STATE OF WASHINGTON — 34738 — REGISTERED PROFESSIONAL ENGINEER
FEBRUARY 23, 2018

Parametrix
ENGINEERING . PLANNING . ENVIRONMENTAL SCIENCES
1019 39TH AVENUE SE, SUITE 100 | PUYALLUP, WA 98374
P 253.604.6600
WWW.PARAMETRIX.COM

PROJECT NAME
THE CONSOLIDATED BOROUGH OF QUIL CEDA VILLAGE
MBR TREATMENT FACILITY UPGRADE
TULALIP, WASHINGTON

LCP-2014
PLC 3, RACK 1, SLOT 7
DISCRETE INPUTS

DRAWING NO. 144 OF 157

I264

FIELD	JUNCTION BOX OR PANEL MOUNTED DEVICES	LCP-___	
		TERMINAL BLOCKS	PLC

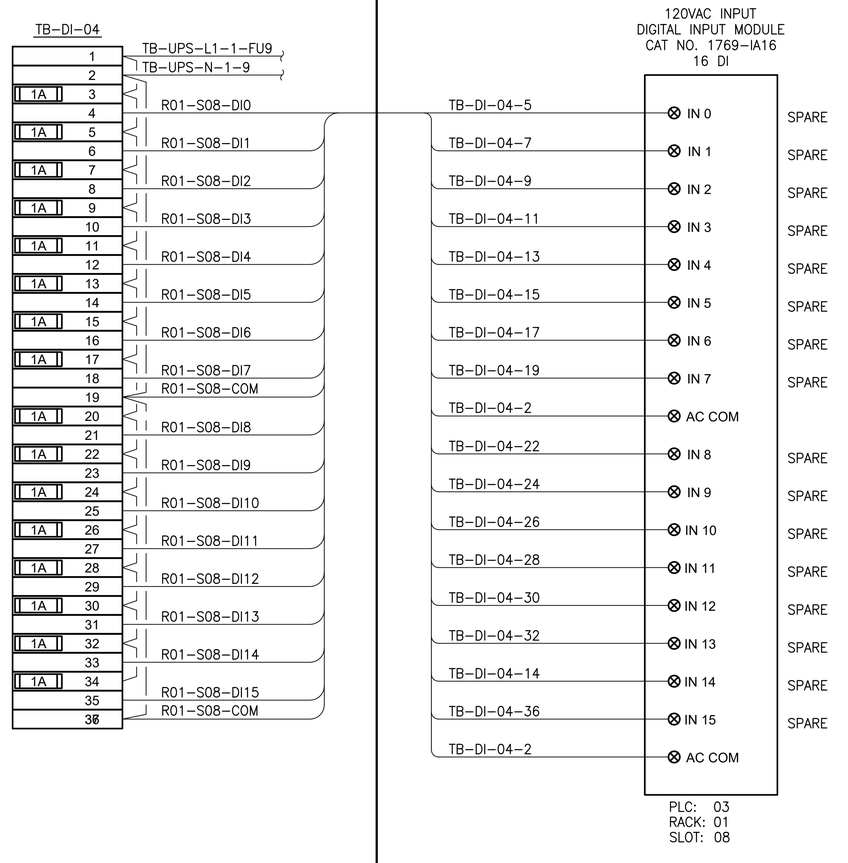

NOTES:

PROJECT WORK SHOWN ON THIS DRAWING IS ALL INCLUDED IN SCHEDULE A

LEGEND:

- WIRING INTERNAL TO PANEL
- FIELD WIRING
- ?? — DEVICE TERMINAL
- ??? — FEED-THROUGH TERMINAL IN PANEL
- SH ??? — SHIELD TERMINAL IN PANEL
- ??? — GROUND TERMINAL IN PANEL
- ?A ??? — FUSE TERMINAL IN PANEL
- ?A ??? — CIRCUIT BREAKER TERMINAL IN PANEL
- NC / CR??? C / NO — RELAY TERMINAL IN PANEL

REVISIONS	DATE	BY

DESIGNED D. MILES
DRAWN D. MILES
CHECKED J. MURPHY
APPROVED B. BUNKER

ONE INCH AT FULL SCALE. IF NOT, SCALE ACCORDINGLY

FILE NAME PS1598102-I265
JOB No. 216-1598-102
DATE FEBRUARY 2018

ARTHUR G. STOKES — STATE OF WASHINGTON — 34738 — REGISTERED PROFESSIONAL ENGINEER

FEBRUARY 23, 2018

Parametrix
ENGINEERING . PLANNING . ENVIRONMENTAL SCIENCES
1019 39TH AVENUE SE, SUITE 100 | PUYALLUP, WA 98374
P 253.604.6600
WWW.PARAMETRIX.COM

PROJECT NAME
THE CONSOLIDATED BOROUGH OF QUIL CEDA VILLAGE
MBR TREATMENT FACILITY UPGRADE
TULALIP, WASHINGTON

LCP-2014
PLC 3, RACK 1, SLOT 8
DISCRETE INPUTS

DRAWING NO. 145 OF 157

I265

PATH: U:\PSO\Projects\Clients\1598-TulalipTribes\216-1598-102 MBR Upgrade\99Svcs\CADD\DWG PLOTTED BY: vondejpm DATE: Thursday, February 22, 2018 2:22:07 PM
LAYOUT: I265

NOTES:

1. PLC RACK ASSEMBLY SHALL REPLACE THE EXISTING PLC IN LCP-3600.
2. REFER TO SECTION 40 61 13 FOR SYSTEM INTEGRATOR SEQUENCING.
3. CONNECT RACKS WITH 1769-CRL3 EXPANSION CABLE

PROJECT WORK SHOWN ON THIS DRAWING IS ALL INCLUDED IN
SCHEDULE A

RACK 01

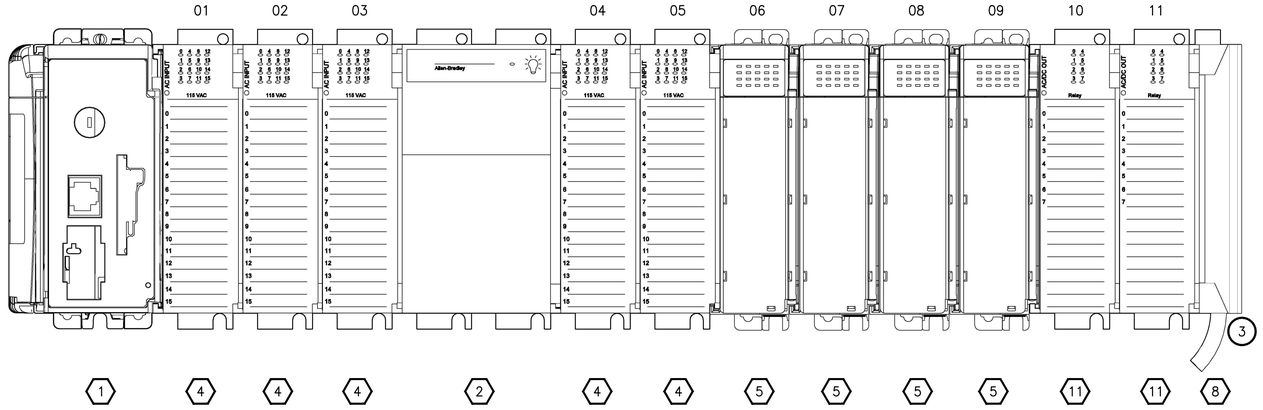

RACK 02

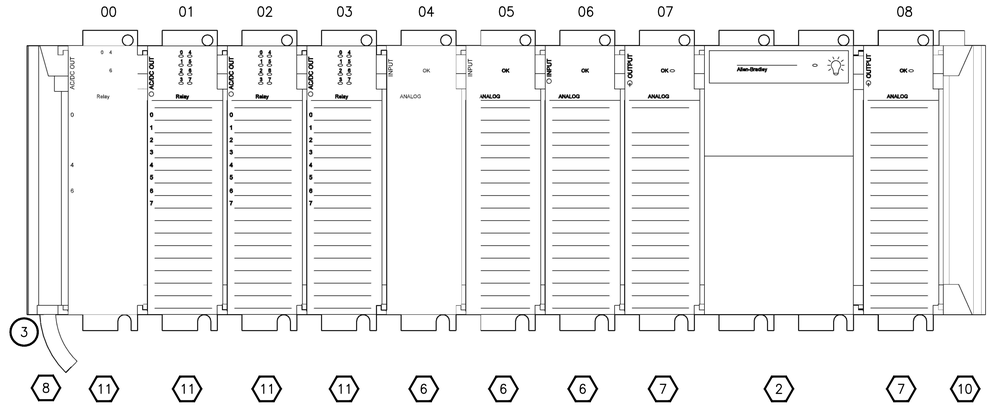

LCP-3600 RACK LAYOUT LEGEND

1	1769-L36ERM (1)	COMPACTLOGIX CONTROLLER
2	1769-PA4	POWER SUPPLY 120/240 VAC INPUT
3	NOT USED	
4	1769-IA16	16 POINT 120 VAC INPUT MODULE
5	1769-IA8I	8 POINT 120 VAC ISOLATED INPUT MODULE
6	1769-IF16C	16 CHANNEL COMPACT HIGH-DENSITY ANALOG VOLTAGE INPUT MODULE
7	1769-OF8C	8 CHANNEL ANALOG CURRENT OUTPUT MODULE
8	1769-CRL3	1M RIGHT-TO-LEFT BUS EXPANSION CABLE
9	NOT USED	NOT USED
10	1769-ECR	RIGHT END CAP/TERMINATOR
11	1769-OW8I	8 POINT VAC/VDC ISOLATED RELAY OUTPUT MODULE

	REVISIONS	DATE	BY
1	PLC PROCESSOR CHANGE	3-29-18	AS

DESIGNED D. MILES
DRAWN D. MILES
CHECKED J. MURPHY
APPROVED B. BUNKER

ONE INCH AT FULL SCALE. IF NOT, SCALE ACCORDINGLY

FILE NAME PS1598102-I300
JOB No. 216-1598-102
DATE FEBRUARY 2018

ARTHUR G. STOKES — STATE OF WASHINGTON — 34736 — REGISTERED PROFESSIONAL ENGINEER

MARCH 29, 2018

Parametrix
ENGINEERING . PLANNING . ENVIRONMENTAL SCIENCES
1019 39TH AVENUE SE, SUITE 100 | PUYALLUP, WA 98374
P 253.604.6600
WWW.PARAMETRIX.COM

PROJECT NAME
THE CONSOLIDATED BOROUGH OF QUIL CEDA VILLAGE
MBR TREATMENT FACILITY UPGRADE
TULALIP, WASHINGTON

LCP-3600 PLC RACK ASSEMBLY

DRAWING NO. 146 OF 157

I300

PATH: U:\PSO\Projects\Clients\1598-TulalipTribes\216-1598-102 MBR Upgrade\99Svcs\CADD\DWG PLOTTED BY: milesdar DATE: Thursday, March 29, 2018 8:30:08 AM LAYOUT: I300

LCP-3600

FIELD	TERMINAL BLOCKS	PLC

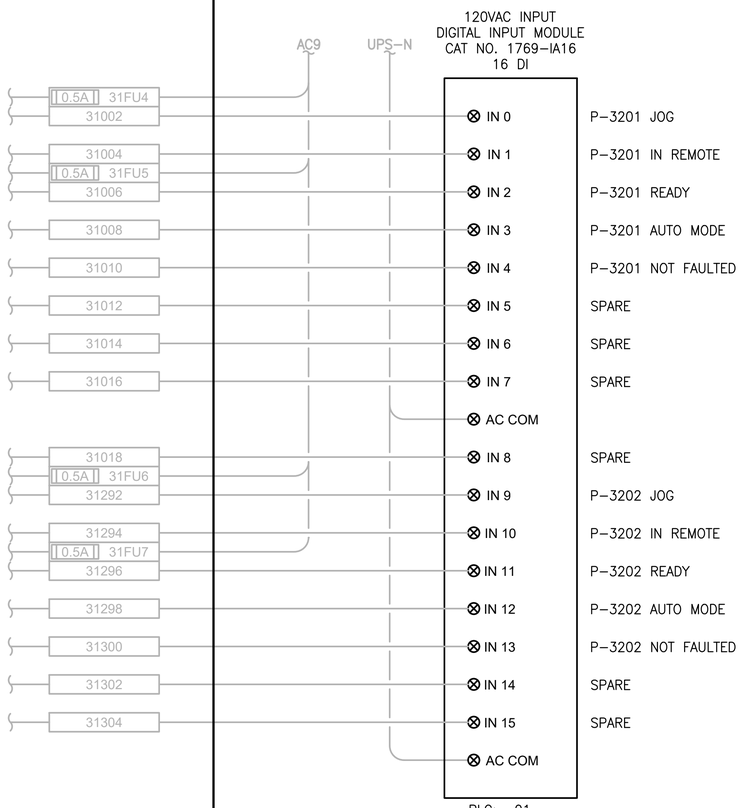

FIELD	TERMINAL BLOCKS	PLC

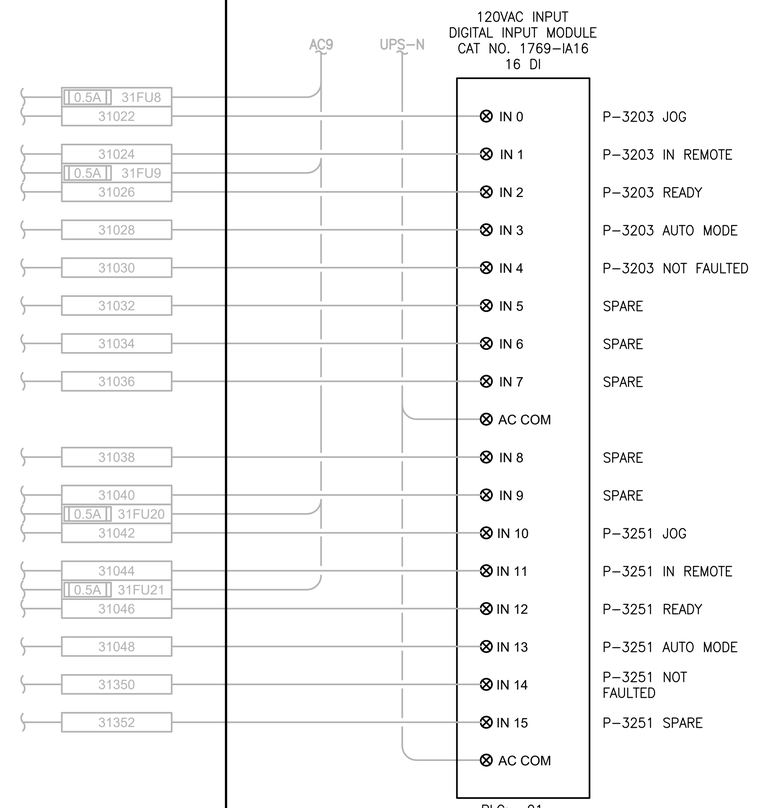

NOTES:

1. CONTRACTOR TO REPLACE EXISTING 1746–IA16 WITH NEW 1769–IA16
2. NOT ALL EXISTING TERMINAL BLOCKS, PANEL DEVICES, OR FIELD CONNECTIONS ARE SHOWN ON THE DRAWING.
3. EXISTING COMPONENT LABELING FROM TSI AS–BUILT DRAWINGS, CONTRACTOR IS RESPONSIBLE FOR FIELD VERIFYING THIS INFORMATION.

PROJECT WORK SHOWN ON THIS DRAWING IS ALL INCLUDED IN SCHEDULE A

LEGEND:

- WIRING INTERNAL TO PANEL
- FIELD WIRING
- [??] DEVICE TERMINAL
- [???] FEED–THROUGH TERMINAL IN PANEL
- [SHLD] SHIELD TERMINAL IN PANEL
- [⏚ ???] GROUND TERMINAL IN PANEL
- [?A ???] FUSE TERMINAL IN PANEL
- [?A ↻ ???] CIRCUIT BREAKER TERMINAL IN PANEL
- NC / CR??? C / NO RELAY TERMINAL IN PANEL

PATH: U:\PSO\Projects\Clients\1598–TulalipTribes\216–1598–102 MBR Upgrade\99Svcs\CADD\DWG
PLOTTED BY: vonde|jam DATE: Thursday, February 22, 2018 3:16:25 PM
LAYOUT: I301

REVISIONS	DATE	BY

DESIGNED D. MILES
DRAWN D. MILES
CHECKED J. MURPHY
APPROVED B. BUNKER

ONE INCH AT FULL SCALE.
IF NOT, SCALE ACCORDINGLY

FILE NAME PS1598102–I301
JOB No. 216–1598–102
DATE FEBRUARY 2018

ARTHUR G. STOLE — STATE OF WASHINGTON — 34736 — REGISTERED PROFESSIONAL ENGINEER

FEBRUARY 23, 2018

Parametrix
ENGINEERING , PLANNING , ENVIRONMENTAL SCIENCES
1019 39TH AVENUE SE, SUITE 100 | PUYALLUP, WA 98374
P 253.604.6600
WWW.PARAMETRIX.COM

PROJECT NAME
THE CONSOLIDATED BOROUGH OF
QUIL CEDA VILLAGE
MBR TREATMENT FACILITY UPGRADE
TULALIP, WASHINGTON

LCP-3600
PLC 1, RACK 1, SLOT 1 AND SLOT 2
DISCRETE INPUTS

DRAWING NO.
147 OF 157

I301

LCP-3600

FIELD	TERMINAL BLOCKS	PLC

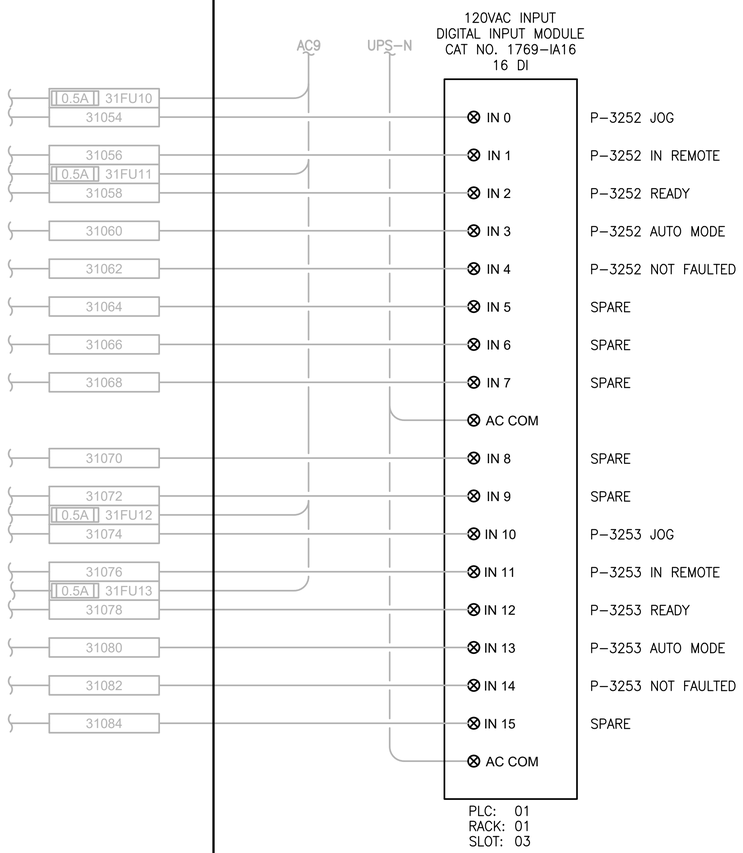

FIELD	TERMINAL BLOCKS	PLC

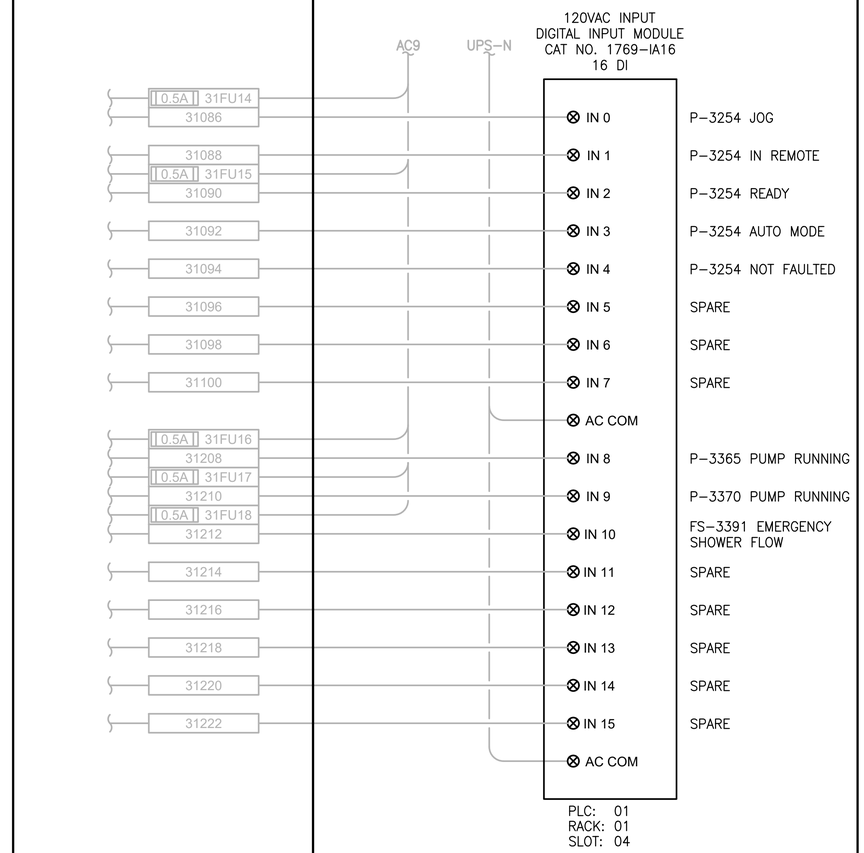

NOTES:

1. CONTRACTOR TO REPLACE EXISTING 1746-IA16 WITH NEW 1769-IA16
2. NOT ALL EXISTING TERMINAL BLOCKS, PANEL DEVICES, OR FIELD CONNECTIONS ARE SHOWN ON THE DRAWING.
3. EXISTING COMPONENT LABELING FROM TSI AS-BUILT DRAWINGS, CONTRACTOR IS RESPONSIBLE FOR FIELD VERIFYING THIS INFORMATION.

PROJECT WORK SHOWN ON THIS DRAWING IS ALL INCLUDED IN SCHEDULE A

LEGEND:

- WIRING INTERNAL TO PANEL
- FIELD WIRING
- ?? — DEVICE TERMINAL
- ??? — FEED-THROUGH TERMINAL IN PANEL
- SHLD — SHIELD TERMINAL IN PANEL
- ??? — GROUND TERMINAL IN PANEL
- ?A ??? — FUSE TERMINAL IN PANEL
- ?A ??? — CIRCUIT BREAKER TERMINAL IN PANEL
- NC / CR??? C / NO — RELAY TERMINAL IN PANEL

	REVISIONS	DATE	BY

DESIGNED D. MILES
DRAWN D. MILES
CHECKED J. MURPHY
APPROVED B. BUNKER

ONE INCH AT FULL SCALE. IF NOT, SCALE ACCORDINGLY

FILE NAME PS1598102-I302
JOB No. 216-1598-102
DATE FEBRUARY 2018

ARTHUR G. STOKES — STATE OF WASHINGTON — 34736 — REGISTERED PROFESSIONAL ENGINEER

FEBRUARY 23, 2018

Parametrix
ENGINEERING . PLANNING . ENVIRONMENTAL SCIENCES
1019 39TH AVENUE SE, SUITE 100 | PUYALLUP, WA 98374
P 253.604.6600
WWW.PARAMETRIX.COM

PROJECT NAME
THE CONSOLIDATED BOROUGH OF QUIL CEDA VILLAGE
MBR TREATMENT FACILITY UPGRADE
TULALIP, WASHINGTON

LCP-3600
PLC 1, RACK 1, SLOT 3 AND SLOT 4
DISCRETE INPUTS

DRAWING NO. 148 OF 157

I302

PATH: U:\PSO\Projects\Clients\1598-TulalipTribes\216-1598-102 MBR Upgrade\99Svcs\CADD\DWG
PLOTTED BY: vondejpm DATE: Thursday, February 22, 2018 3:20:14 PM
LAYOUT: I302

LCP-3600

FIELD	TERMINAL BLOCKS	PLC

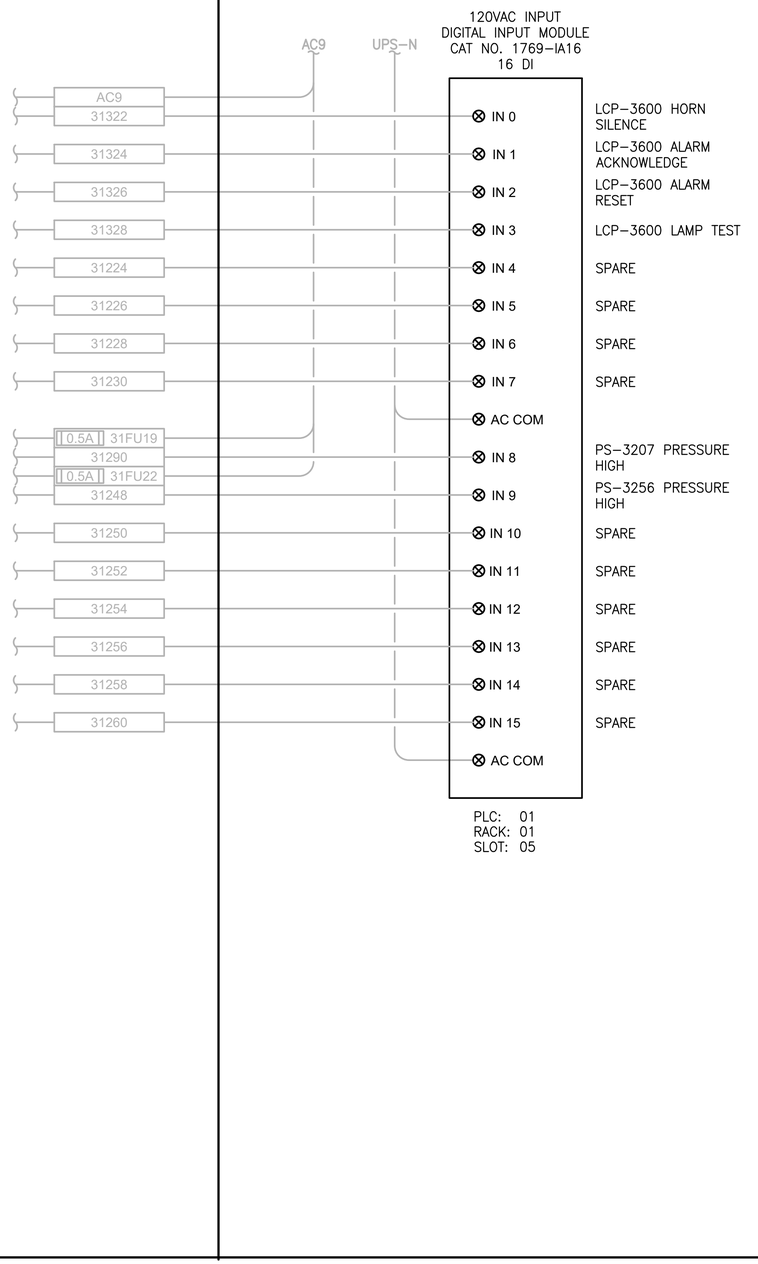

FIELD	TERMINAL BLOCKS	PLC

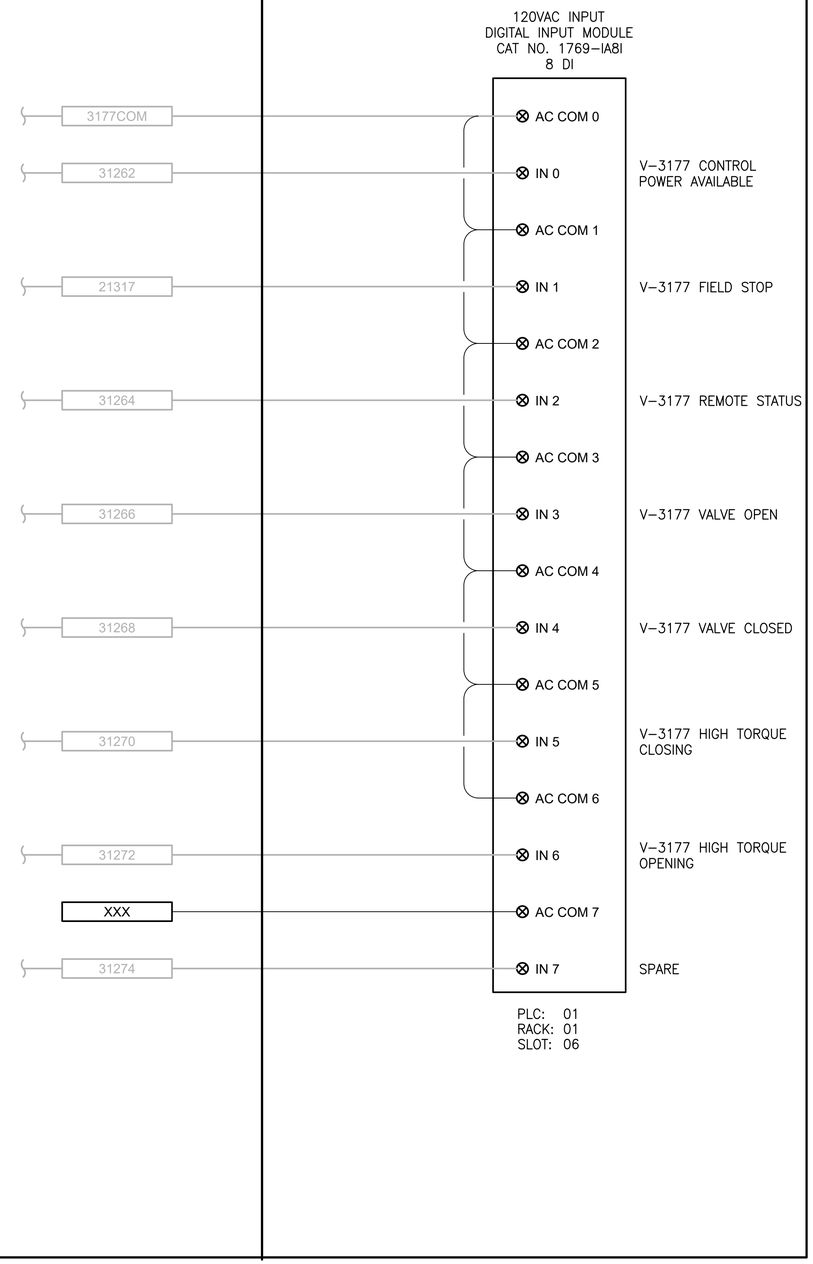

NOTES:

1. CONTRACTOR TO REPLACE EXISTING 1746-IA16 WITH NEW 1769-IA16 AND EXISTING 1746-IA8 WITH NEW 1769-IA8I.
2. NOT ALL EXISTING TERMINAL BLOCKS, PANEL DEVICES, OR FIELD CONNECTIONS ARE SHOWN ON THE DRAWING.
3. EXISTING COMPONENT LABELING FROM TSI AS-BUILT DRAWINGS, CONTRACTOR IS RESPONSIBLE FOR FIELD VERIFYING THIS INFORMATION.

PROJECT WORK SHOWN ON THIS DRAWING IS ALL INCLUDED IN SCHEDULE A

LEGEND:

- WIRING INTERNAL TO PANEL
- FIELD WIRING
- [??] DEVICE TERMINAL
- [???] FEED-THROUGH TERMINAL IN PANEL
- [SHLD] SHIELD TERMINAL IN PANEL
- [⏚ ???] GROUND TERMINAL IN PANEL
- [?A ???] FUSE TERMINAL IN PANEL
- [?A ↷ ???] CIRCUIT BREAKER TERMINAL IN PANEL
- NC / CR??? C / NO RELAY TERMINAL IN PANEL

▷	REVISIONS	DATE	BY

DESIGNED D. MILES
DRAWN D. MILES
CHECKED J. MURPHY
APPROVED B. BUNKER

ONE INCH AT FULL SCALE. IF NOT, SCALE ACCORDINGLY

FILE NAME PS1598102-I303
JOB No. 216-1598-102
DATE FEBRUARY 2018

ARTHUR G. STOKES — STATE OF WASHINGTON — 34736 — REGISTERED PROFESSIONAL ENGINEER

FEBRUARY 23, 2018

Parametrix
ENGINEERING . PLANNING . ENVIRONMENTAL SCIENCES
1019 39TH AVENUE SE, SUITE 100 | PUYALLUP, WA 98374
P 253.604.6600
WWW.PARAMETRIX.COM

PROJECT NAME
THE CONSOLIDATED BOROUGH OF QUIL CEDA VILLAGE
MBR TREATMENT FACILITY UPGRADE
TULALIP, WASHINGTON

LCP-3600
PLC 1, RACK 1, SLOT 5 AND SLOT 6
DISCRETE INPUTS

DRAWING NO. 149 OF 157

I303

PATH: U:\PSO\Projects\Clients\1598-TulalipTribes\216-1598-102 MBR Upgrade\99Svcs\CADD\DWG PLOTTED BY: vondejpm DATE: Friday, February 23, 2018 10:40:17 AM
LAYOUT: I303

LCP-3600

FIELD	TERMINAL BLOCKS	PLC
	3271COM	AC COM 0
	31102	IN 0 — P–3271 CONTROL POWER AVAILABLE
		AC COM 1
	31104	IN 1 — P–3271 MOTOR RUNNING
		AC COM 2
	31106	IN 2 — P–3271 OVERLOAD TRIP
		AC COM 3
	31108	IN 3 — P–3271 MCC IN HAND
		AC COM 4
	31110	IN 4 — P–3271 MCC IN AUTO
		AC COM 5
	31112	IN 5 — P–3271 FIELD–JOG
		AC COM 6
	31114	IN 6 — P–3271 FIELD IN REMOTE
	XXX	AC COM 7
	31116	IN 7 — SPARE

120VAC INPUT
DIGITAL INPUT MODULE
CAT NO. 1769–IA8I
8 DI

PLC: 01
RACK: 01
SLOT: 07

FIELD	TERMINAL BLOCKS	PLC
	3285COM	AC COM 0
	31132	IN 0 — P–3285 CONTROL POWER AVAILABLE
		AC COM 1
	31134	IN 1 — P–3285 MOTOR RUNNING
		AC COM 2
	31136	IN 2 — P–3285 OVERLOAD TRIP
		AC COM 3
	31138	IN 3 — P–3285 MCC IN HAND
		AC COM 4
	11292	IN 4 — P–3285 MCC IN AUTO
		AC COM 5
	31142	IN 5 — P–3285 FIELD–JOG
		AC COM 6
	31144	IN 6 — P–3285 FIELD IN REMOTE
	XXX	AC COM 7
	31146	IN 7 — SPARE

120VAC INPUT
DIGITAL INPUT MODULE
CAT NO. 1769–IA8I
8 DI

PLC: 01
RACK: 01
SLOT: 08

NOTES:

1. CONTRACTOR TO REPLACE EXISTING 1746–IA8 WITH NEW 1769–IA8I.
2. NOT ALL EXISTING TERMINAL BLOCKS, PANEL DEVICES, OR FIELD CONNECTIONS ARE SHOWN ON THE DRAWING.
3. EXISTING COMPONENT LABELING FROM TSI AS–BUILT DRAWINGS, CONTRACTOR IS RESPONSIBLE FOR FIELD VERIFYING THIS INFORMATION.

PROJECT WORK SHOWN ON THIS DRAWING IS ALL INCLUDED IN SCHEDULE A

LEGEND:

- WIRING INTERNAL TO PANEL
- FIELD WIRING
- ?? — DEVICE TERMINAL
- ??? — FEED–THROUGH TERMINAL IN PANEL
- SHLD — SHIELD TERMINAL IN PANEL
- ??? — GROUND TERMINAL IN PANEL
- ?A ??? — FUSE TERMINAL IN PANEL
- ?A ??? — CIRCUIT BREAKER TERMINAL IN PANEL
- NC / CR??? C / NO — RELAY TERMINAL IN PANEL

REVISIONS	DATE	BY

DESIGNED D. MILES
DRAWN D. MILES
CHECKED J. MURPHY
APPROVED B. BUNKER

ONE INCH AT FULL SCALE. IF NOT, SCALE ACCORDINGLY
FILE NAME PS1598102–I304
JOB No. 216–1598–102
DATE FEBRUARY 2018

ARTHUR G. STOKES — STATE OF WASHINGTON — 34738 — REGISTERED PROFESSIONAL ENGINEER

FEBRUARY 23, 2018

Parametrix
ENGINEERING . PLANNING . ENVIRONMENTAL SCIENCES
1019 39TH AVENUE SE, SUITE 100 | PUYALLUP, WA 98374
P 253.604.6600
WWW.PARAMETRIX.COM

PROJECT NAME
THE CONSOLIDATED BOROUGH OF QUIL CEDA VILLAGE
MBR TREATMENT FACILITY UPGRADE
TULALIP, WASHINGTON

LCP-3600
PLC 1, RACK 1, SLOT 7 AND SLOT 8
DISCRETE INPUTS

DRAWING NO. 150 OF 157
I304

PATH: U:\PSO\Projects\Clients\1598–TulalipTribes\216–1598–102 MBR Upgrade\99Svcs\CADD\DWG PLOTTED BY: vondejpm DATE: Thursday, February 22, 2018 3:28:04 PM
LAYOUT: I304

LCP-3600

FIELD	TERMINAL BLOCKS	PLC	FIELD	TERMINAL BLOCKS	PLC

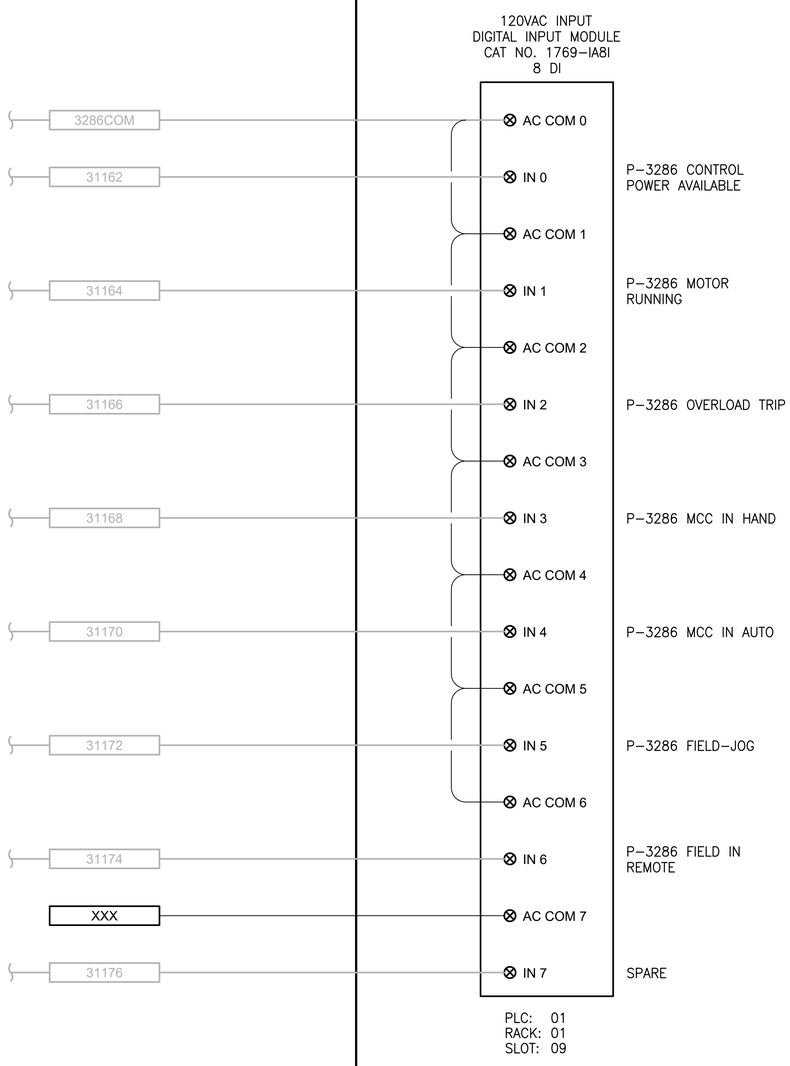

NOTES:

1. CONTRACTOR TO REPLACE EXISTING 1746–IA8 WITH NEW 1769–IA8I.
2. NOT ALL EXISTING TERMINAL BLOCKS, PANEL DEVICES, OR FIELD CONNECTIONS ARE SHOWN ON THE DRAWING.
3. EXISTING COMPONENT LABELING FROM TSI AS–BUILT DRAWINGS, CONTRACTOR IS RESPONSIBLE FOR FIELD VERIFYING THIS INFORMATION.

PROJECT WORK SHOWN ON THIS DRAWING IS ALL INCLUDED IN SCHEDULE A

LEGEND:

- WIRING INTERNAL TO PANEL
- FIELD WIRING
- ?? — DEVICE TERMINAL
- ??? — FEED–THROUGH TERMINAL IN PANEL
- SHLD — SHIELD TERMINAL IN PANEL
- ??? — GROUND TERMINAL IN PANEL
- ?A ??? — FUSE TERMINAL IN PANEL
- ?A ??? — CIRCUIT BREAKER TERMINAL IN PANEL
- NC / CR??? C / NO — RELAY TERMINAL IN PANEL

	REVISIONS	DATE	BY

DESIGNED D. MILES
DRAWN D. MILES
CHECKED J. MURPHY
APPROVED B. BUNKER

ONE INCH AT FULL SCALE. IF NOT, SCALE ACCORDINGLY

FILE NAME PS1598102–I305
JOB No. 216–1598–102
DATE FEBRUARY 2018

ARTHUR G. STOKES — STATE OF WASHINGTON — 34738 — REGISTERED PROFESSIONAL ENGINEER

FEBRUARY 23, 2018

Parametrix
ENGINEERING . PLANNING . ENVIRONMENTAL SCIENCES
1019 39TH AVENUE SE, SUITE 100 | PUYALLUP, WA 98374
P 253.604.6600
WWW.PARAMETRIX.COM

PROJECT NAME
THE CONSOLIDATED BOROUGH OF QUIL CEDA VILLAGE
MBR TREATMENT FACILITY UPGRADE
TULALIP, WASHINGTON

LCP-3600
PLC 1, RACK 1, SLOT 9
DISCRETE INPUTS

DRAWING NO. 151 OF 157

I305

PATH: U:\PSO\Projects\Clients\1598–TulalipTribes\216–1598–102 MBR Upgrade\99Svcs\CADD\DWG PLOTTED BY: vondejpm DATE: Thursday, February 22, 2018 3:32:27 PM
LAYOUT: I305

LCP-3600

PLC	TERMINAL BLOCKS	FIELD

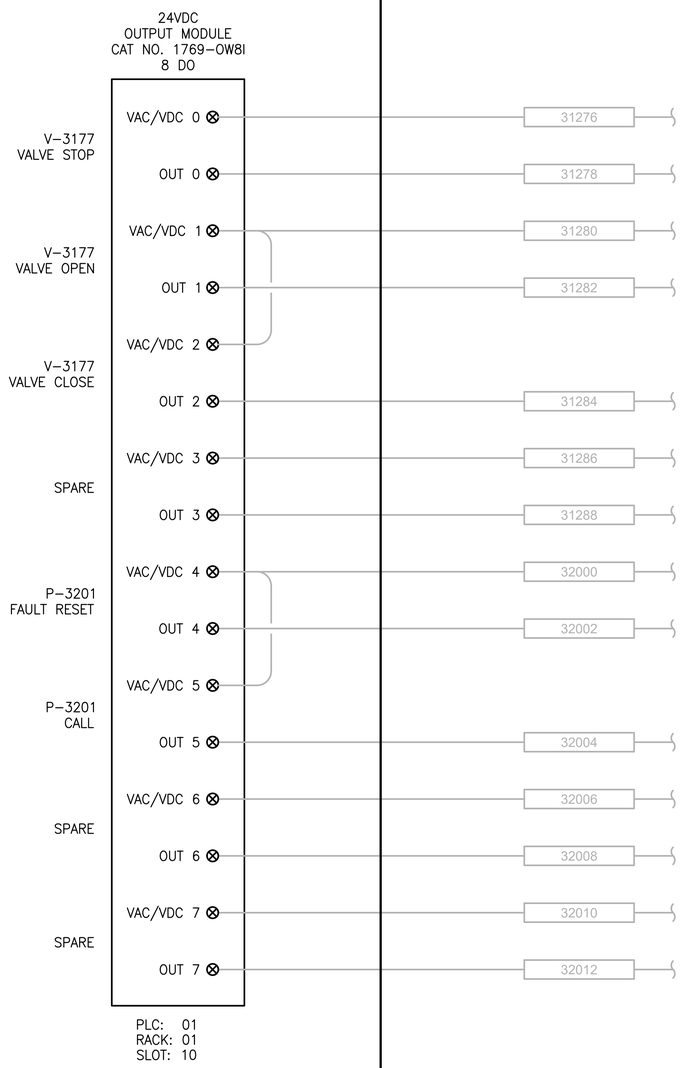

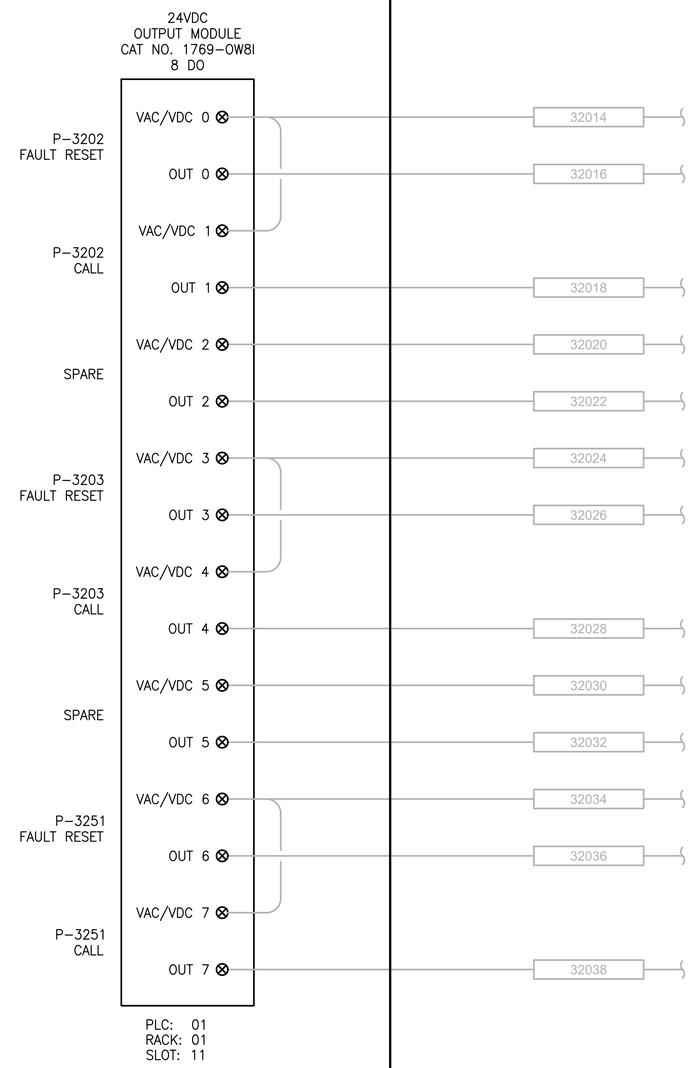

PLC	TERMINAL BLOCKS	FIELD

NOTES:

1. CONTRACTOR TO REPLACE EXISTING 1746–IA8 WITH NEW 1769–OW8I.
2. NOT ALL EXISTING TERMINAL BLOCKS, PANEL DEVICES, OR FIELD CONNECTIONS ARE SHOWN ON THE DRAWING.
3. EXISTING COMPONENT LABELING FROM TSI AS–BUILT DRAWINGS, CONTRACTOR IS RESPONSIBLE FOR FIELD VERIFYING THIS INFORMATION.

PROJECT WORK SHOWN ON THIS DRAWING IS ALL INCLUDED IN SCHEDULE A

LEGEND:

- WIRING INTERNAL TO PANEL
- FIELD WIRING
- [??] DEVICE TERMINAL
- [???] FEED–THROUGH TERMINAL IN PANEL
- [SHLD] SHIELD TERMINAL IN PANEL
- [⏚ ???] GROUND TERMINAL IN PANEL
- [?A ???] FUSE TERMINAL IN PANEL
- [?A ↷ ???] CIRCUIT BREAKER TERMINAL IN PANEL
- RELAY TERMINAL IN PANEL (NC / CR??? C / NO)

	REVISIONS	DATE	BY

DESIGNED D. MILES
DRAWN D. MILES
CHECKED J. MURPHY
APPROVED B. BUNKER

ONE INCH AT FULL SCALE. IF NOT, SCALE ACCORDINGLY

FILE NAME PS1598102–I306
JOB No. 216–1598–102
DATE FEBRUARY 2018

ARTHUR G. STOKES — STATE OF WASHINGTON — 34738 — REGISTERED PROFESSIONAL ENGINEER

FEBRUARY 23, 2018

Parametrix
ENGINEERING . PLANNING . ENVIRONMENTAL SCIENCES
1019 39TH AVENUE SE, SUITE 100 | PUYALLUP, WA 98374
P 253.604.6600
WWW.PARAMETRIX.COM

PROJECT NAME
THE CONSOLIDATED BOROUGH OF
QUIL CEDA VILLAGE
MBR TREATMENT FACILITY UPGRADE
TULALIP, WASHINGTON

LCP-3600
PLC 1, RACK 1, SLOT 10 AND SLOT 11
DISCRETE OUTPUTS

DRAWING NO.
152 OF 157

I306

PATH: U:\PSO\Projects\Clients\1598–TulalipTribes\216–1598–102 MBR Upgrade\99Svcs\CADD\DWG PLOTTED BY: vondejorn DATE: Thursday, February 22, 2018 3:37:29 PM
LAYOUT: I306

LCP-3600

PLC

24VDC
OUTPUT MODULE
CAT NO. 1769–OW8I
8 DO

P–3252 FAULT RESET	VAC/VDC 0	32040
	OUT 0	32042
	VAC/VDC 1	
P–3252 CALL	OUT 1	32044
	VAC/VDC 2	32046
SPARE	OUT 2	32048
	VAC/VDC 3	32050
P–3253 FAULT RESET	OUT 3	32052
	VAC/VDC 4	
P–3253 CALL	OUT 4	32054
	VAC/VDC 5	32056
SPARE	OUT 5	32058
	VAC/VDC 6	32060
P–3254 FAULT RESET	OUT 6	32062
	VAC/VDC 7	
P–3254 CALL	OUT 7	32064

PLC: 01
RACK: 02
SLOT: 00

PLC

24VDC
OUTPUT MODULE
CAT NO. 1769–OW8I
8 DO

P–3271 READY	VAC/VDC 0	31118
	OUT 0	31120
	VAC/VDC 1	
P–3271 JOG CALL	OUT 1	31122
	VAC/VDC 2	
P–3271 AUTO CALL	OUT 2	31124
	VAC/VDC 3	31126
SPARE	OUT 3	31128
	VAC/VDC 4	31148
P–3285 READY	OUT 4	31150
	VAC/VDC 5	
P–3285 JOG CALL	OUT 5	31152
	VAC/VDC 6	
P–3285 AUTO CALL	OUT 6	31154
	VAC/VDC 7	31156
SPARE	OUT 7	31158

PLC: 01
RACK: 02
SLOT: 01

TERMINAL BLOCKS

FIELD

NOTES:

1. CONTRACTOR TO REPLACE EXISTING 1746–IA8 WITH NEW 1769–OW8I.
2. NOT ALL EXISTING TERMINAL BLOCKS, PANEL DEVICES, OR FIELD CONNECTIONS ARE SHOWN ON THE DRAWING.
3. EXISTING COMPONENT LABELING FROM TSI AS–BUILT DRAWINGS, CONTRACTOR IS RESPONSIBLE FOR FIELD VERIFYING THIS INFORMATION.

PROJECT WORK SHOWN ON THIS DRAWING IS ALL INCLUDED IN SCHEDULE A

LEGEND:

- WIRING INTERNAL TO PANEL
- FIELD WIRING
- ?? DEVICE TERMINAL
- ??? FEED–THROUGH TERMINAL IN PANEL
- SHLD SHIELD TERMINAL IN PANEL
- ??? GROUND TERMINAL IN PANEL
- ?A ??? FUSE TERMINAL IN PANEL
- ?A ??? CIRCUIT BREAKER TERMINAL IN PANEL
- NC / CR??? C / NO RELAY TERMINAL IN PANEL

	REVISIONS	DATE	BY

DESIGNED D. MILES
DRAWN D. MILES
CHECKED J. MURPHY
APPROVED B. BUNKER

ONE INCH AT FULL SCALE.
IF NOT, SCALE ACCORDINGLY

FILE NAME PS1598102–I307
JOB No. 216–1598–102
DATE FEBRUARY 2018

ARTHUR G. STOKES
STATE OF WASHINGTON
34736
REGISTERED
PROFESSIONAL ENGINEER

FEBRUARY 23, 2018

Parametrix
ENGINEERING . PLANNING . ENVIRONMENTAL SCIENCES
1019 39TH AVENUE SE, SUITE 100 | PUYALLUP, WA 98374
P 253.604.6600
WWW.PARAMETRIX.COM

PROJECT NAME
THE CONSOLIDATED BOROUGH OF QUIL CEDA VILLAGE
MBR TREATMENT FACILITY UPGRADE
TULALIP, WASHINGTON

LCP-3600
PLC 1, RACK 2, SLOT 0 AND SLOT 1
DISCRETE OUTPUTS

DRAWING NO.
153 OF 157

I307

PATH: U:\PSO\Projects\Clients\1598–Tulalip Tribes\216–1598–102 MBR Upgrade\99Svcs\CADD\DWG PLOTTED BY: vonde|pm DATE: Thursday, February 22, 2018 3:40:45 PM
LAYOUT: I307

LCP-3600

PLC

24VDC
OUTPUT MODULE
CAT NO. 1769–OW8I
8 DO

P–3286 READY	VAC/VDC 0	31178
	OUT 0	31180
P–3286 JOG CALL	VAC/VDC 1	
	OUT 1	31182
P–3286 AUTO CALL	VAC/VDC 2	
	OUT 2	31184
SPARE	VAC/VDC 3	31186
	OUT 3	31188
SPARE	VAC/VDC 4	31190
	OUT 4	31192
SPARE	VAC/VDC 5	31194
	OUT 5	31196
SPARE	VAC/VDC 6	31198
	OUT 6	31200
SPARE	VAC/VDC 7	31202
	OUT 7	31204

PLC: 01
RACK: 02
SLOT: 02

TERMINAL BLOCKS

FIELD

PLC

24VDC
OUTPUT MODULE
CAT NO. 1769–OW8I
8 DO

AC10 UPS–N

LCP–3600 ALARM HORN	VAC/VDC 0	
	OUT 0	ALARM HORN
LCP–3600 SONALERT	VAC/VDC 1	
	OUT 1	31308N CR HORN
SPARE	VAC/VDC 2	XXX
	OUT 2	31232
SPARE	VAC/VDC 3	XXX
	OUT 3	31312
SPARE	VAC/VDC 4	XXX
	OUT 4	31314
SPARE	VAC/VDC 5	XXX
	OUT 5	31316
SPARE	VAC/VDC 6	XXX
	OUT 6	31318
SPARE	VAC/VDC 7	XXX
	OUT 7	31300

PLC: 01
RACK: 02
SLOT: 03

TERMINAL BLOCKS

FIELD

NOTES:

1. CONTRACTOR TO REPLACE EXISTING 1746–IA8 WITH NEW 1769–OW8I.
2. NOT ALL EXISTING TERMINAL BLOCKS, PANEL DEVICES, OR FIELD CONNECTIONS ARE SHOWN ON THE DRAWING.
3. EXISTING COMPONENT LABELING FROM TSI AS–BUILT DRAWINGS, CONTRACTOR IS RESPONSIBLE FOR FIELD VERIFYING THIS INFORMATION.

PROJECT WORK SHOWN ON THIS DRAWING IS ALL INCLUDED IN SCHEDULE A

LEGEND:

- WIRING INTERNAL TO PANEL
- FIELD WIRING
- ?? DEVICE TERMINAL
- ??? FEED–THROUGH TERMINAL IN PANEL
- SHLD SHIELD TERMINAL IN PANEL
- ??? GROUND TERMINAL IN PANEL
- ?A ??? FUSE TERMINAL IN PANEL
- ?A ??? CIRCUIT BREAKER TERMINAL IN PANEL
- NC / CR??? C / NO RELAY TERMINAL IN PANEL

PATH: U:\PSO\Projects\Clients\1598–TulalipTribes\216–1598–102 MBR Upgrade\99Svcs\CADD\DWG PLOTTED BY: vondejpm DATE: Thursday, February 22, 2018 3:56:54 PM
LAYOUT: I308

	REVISIONS	DATE	BY

DESIGNED D. MILES
DRAWN D. MILES
CHECKED J. MURPHY
APPROVED B. BUNKER

ONE INCH AT FULL SCALE.
IF NOT, SCALE ACCORDINGLY
FILE NAME PS1598102–I308
JOB No. 216–1598–102
DATE FEBRUARY 2018

ARTHUR G. STOKES
STATE OF WASHINGTON
34738
REGISTERED
PROFESSIONAL ENGINEER
FEBRUARY 23, 2018

Parametrix
ENGINEERING . PLANNING . ENVIRONMENTAL SCIENCES
1019 39TH AVENUE SE, SUITE 100 | PUYALLUP, WA 98374
P 253.604.6600
WWW.PARAMETRIX.COM

PROJECT NAME
THE CONSOLIDATED BOROUGH OF
QUIL CEDA VILLAGE
MBR TREATMENT FACILITY UPGRADE
TULALIP, WASHINGTON

LCP-3600
PLC 1, RACK 2, SLOT 2 AND SLOT 3
DISCRETE OUTPUTS

DRAWING NO.
154 OF 157

I308

LCP-3600

FIELD	TERMINAL BLOCKS	PLC

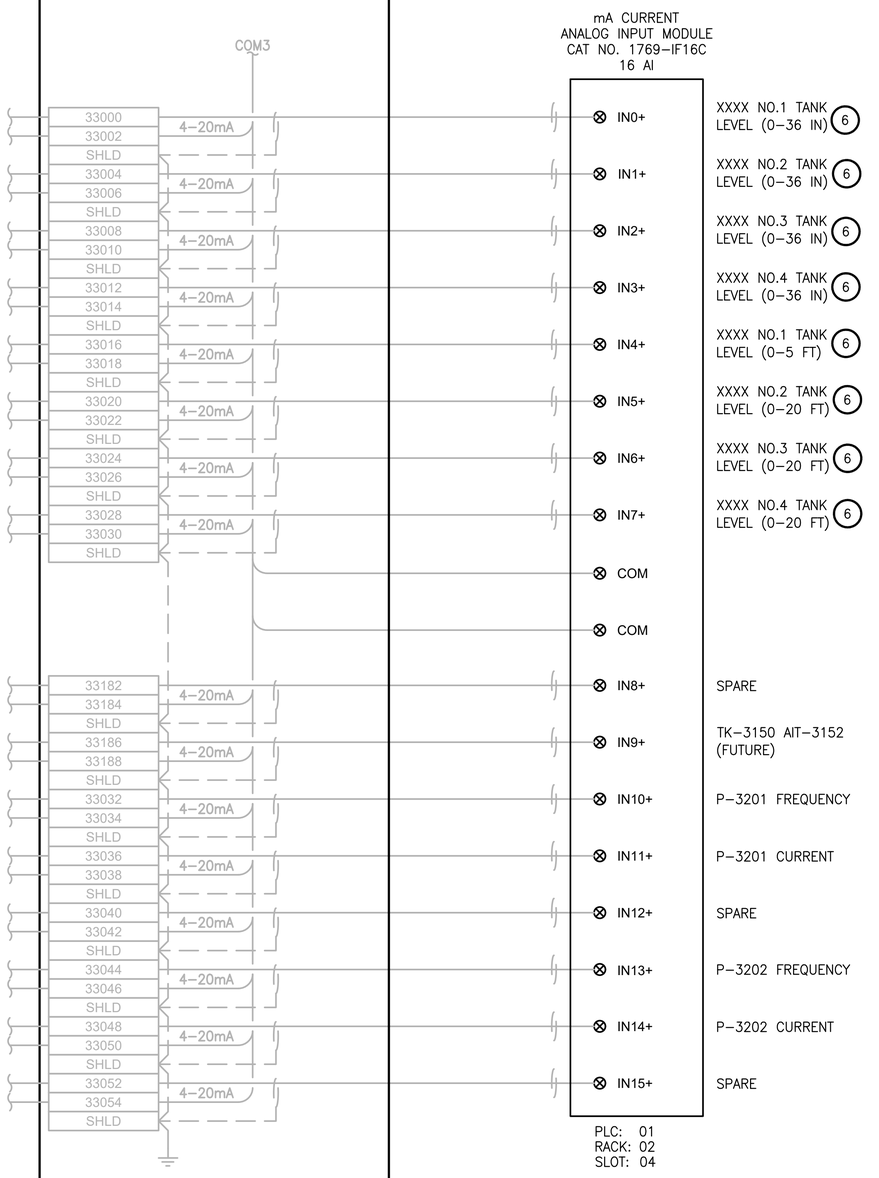

FIELD	TERMINAL BLOCKS	PLC

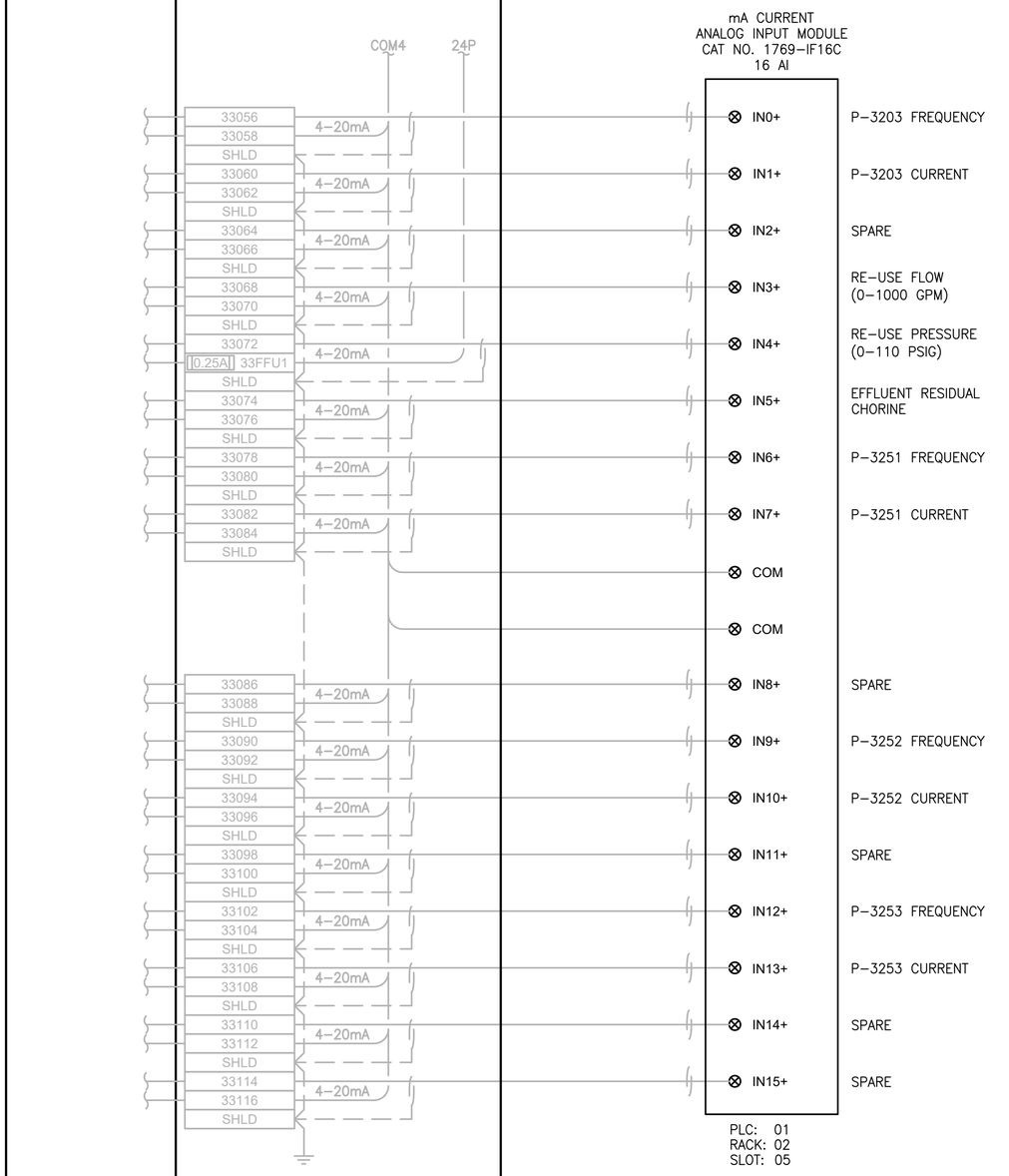

NOTES:

1. CONTRACTOR TO REPLACE EXISTING 1746-IA16 WITH NEW 1769-IF16C
2. NOT ALL EXISTING TERMINAL BLOCKS, PANEL DEVICES, OR FIELD CONNECTIONS ARE SHOWN ON THE DRAWING.
3. 4-20mA SHIELD SHALL BE GROUNDED IN ONLY ONE LOCATION, AT THE PLC CONTROL PANEL GROUND BUS BAR.
4. 4-20mA SHIELD SHALL BE CUT BACK AND HEAT SHRINK APPLIED.
5. EXISTING COMPONENT LABELING FROM TSI AS-BUILT DRAWINGS, CONTRACTOR IS RESPONSIBLE FOR FIELD VERIFYING THIS INFORMATION.

(6) CONTRACTOR TO VERIFY LOOP NUMBERS OF TANKS.

PROJECT WORK SHOWN ON THIS DRAWING IS ALL INCLUDED IN SCHEDULE A

LEGEND:

- WIRING INTERNAL TO PANEL
- FIELD WIRING
- [??] DEVICE TERMINAL
- [???] FEED-THROUGH TERMINAL IN PANEL
- [SHLD] SHIELD TERMINAL IN PANEL
- [⏚ ???] GROUND TERMINAL IN PANEL
- [?A ???] FUSE TERMINAL IN PANEL
- [?A ↷ ???] CIRCUIT BREAKER TERMINAL IN PANEL
- NC / CR??? C / NO RELAY TERMINAL IN PANEL

▷	REVISIONS	DATE	BY

DESIGNED D. MILES
DRAWN D. MILES
CHECKED J. MURPHY
APPROVED B. BUNKER

ONE INCH AT FULL SCALE. IF NOT, SCALE ACCORDINGLY

FILE NAME PS1598102-I309
JOB No. 216-1598-102
DATE FEBRUARY 2018

ARTHUR G. STOKES — STATE OF WASHINGTON — 34736 — REGISTERED PROFESSIONAL ENGINEER

FEBRUARY 23, 2018

Parametrix
ENGINEERING . PLANNING . ENVIRONMENTAL SCIENCES
1019 39TH AVENUE SE, SUITE 100 | PUYALLUP, WA 98374
P 253.604.6600
WWW.PARAMETRIX.COM

PROJECT NAME
THE CONSOLIDATED BOROUGH OF QUIL CEDA VILLAGE
MBR TREATMENT FACILITY UPGRADE
TULALIP, WASHINGTON

LCP-3600
PLC 1, RACK 2, SLOT 4 AND SLOT 5 ANALOG INPUTS

DRAWING NO. 155 OF 157

I309

PLOTTED: Thursday, February 22, 2018 4:12:06 PM
PLOTTED BY: vonde\jpm
PATH: U:\PSO\Projects\Clients\1598-TulalipTribes\216-1598-102 MBR Upgrade\99Svcs\CADD\DWG
LAYOUT: I309

LCP-3600

FIELD	TERMINAL BLOCKS	PLC	FIELD	TERMINAL BLOCKS	PLC

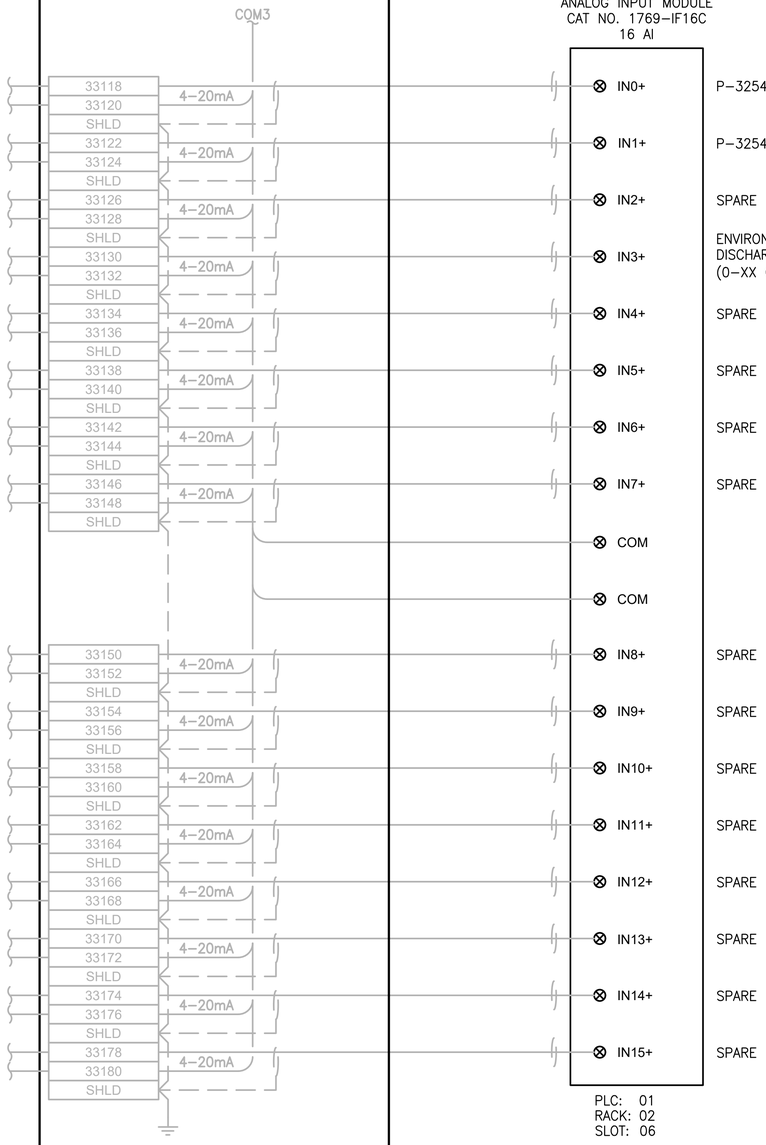

mA CURRENT
ANALOG INPUT MODULE
CAT NO. 1769–IF16C
16 AI

IN0+	P–3254 FREQUENCY
IN1+	P–3254 CURRENT
IN2+	SPARE
IN3+	ENVIRONMENTAL DISCHARGE FLOW (0–XX GPM)
IN4+	SPARE
IN5+	SPARE
IN6+	SPARE
IN7+	SPARE
COM	
COM	
IN8+	SPARE
IN9+	SPARE
IN10+	SPARE
IN11+	SPARE
IN12+	SPARE
IN13+	SPARE
IN14+	SPARE
IN15+	SPARE

PLC: 01
RACK: 02
SLOT: 06

NOTES:

1. CONTRACTOR TO REPLACE EXISTING 1746–IA16 WITH NEW 1769–IF16C
2. NOT ALL EXISTING TERMINAL BLOCKS, PANEL DEVICES, OR FIELD CONNECTIONS ARE SHOWN ON THE DRAWING.
3. 4–20mA SHIELD SHALL BE GROUNDED IN ONLY ONE LOCATION, AT THE PLC CONTROL PANEL GROUND BUS BAR.
4. 4–20mA SHIELD SHALL BE CUT BACK AND HEAT SHRINK APPLIED.
5. EXISTING COMPONENT LABELING FROM TSI AS–BUILT DRAWINGS, CONTRACTOR IS RESPONSIBLE FOR FIELD VERIFYING THIS INFORMATION.

PROJECT WORK SHOWN ON THIS DRAWING IS ALL INCLUDED IN SCHEDULE A

LEGEND:

- WIRING INTERNAL TO PANEL
- FIELD WIRING
- [??] DEVICE TERMINAL
- [???] FEED–THROUGH TERMINAL IN PANEL
- [SHLD] SHIELD TERMINAL IN PANEL
- [⏚ ???] GROUND TERMINAL IN PANEL
- [?A ???] FUSE TERMINAL IN PANEL
- [?A ↻ ???] CIRCUIT BREAKER TERMINAL IN PANEL
- [NC / CR??? C / NO] RELAY TERMINAL IN PANEL

REVISIONS	DATE	BY

DESIGNED D. MILES
DRAWN D. MILES
CHECKED J. MURPHY
APPROVED B. BUNKER

ONE INCH AT FULL SCALE.
IF NOT, SCALE ACCORDINGLY

FILE NAME PS1598102–I310
JOB No. 216–1598–102
DATE FEBRUARY 2018

ARTHUR G. STOLE — STATE OF WASHINGTON — 34736 — REGISTERED PROFESSIONAL ENGINEER

FEBRUARY 23, 2018

Parametrix
ENGINEERING , PLANNING , ENVIRONMENTAL SCIENCES
1019 39TH AVENUE SE, SUITE 100 | PUYALLUP, WA 98374
P 253.604.6600
WWW.PARAMETRIX.COM

PROJECT NAME
THE CONSOLIDATED BOROUGH OF
QUIL CEDA VILLAGE
MBR TREATMENT FACILITY UPGRADE
TULALIP, WASHINGTON

LCP-3600
PLC 1, RACK 2, SLOT 6
ANALOG INPUTS

DRAWING NO.
156 OF 157

I310

PATH: U:\PSO\Projects\Clients\1598–TulalipTribes\216–1598–102 MBR Upgrade\99Svcs\CADD\DWG PLOTTED BY: vonde|om DATE: Thursday, February 22, 2018 4:16:46 PM
LAYOUT: I310

LCP-3600

PLC

mA CURRENT
ANALOG OUTPUT MODULE
CAT NO. 1769–OF8C
8 AO

24P

P–3201 SPEED SETPOINT	ANLG COM ⊗	
	I OUT 0+ ⊗	
SPARE	ANLG COM ⊗	
	I OUT 1+ ⊗	
P–3202 SPEED SETPOINT	ANLG COM ⊗	
	I OUT 2+ ⊗	
SPARE	ANLG COM ⊗	
	I OUT 3+ ⊗	
P–3203 SPEED SETPOINT	ANLG COM ⊗	
	I OUT 4+ ⊗	
SPARE	ANLG COM ⊗	
	I OUT 5+ ⊗	
P–3251 SPEED SETPOINT	ANLG COM ⊗	
	I OUT 6+ ⊗	
SPARE	ANLG COM ⊗	
	I OUT 7+ ⊗	
	DC NEUT ⊗	
	+24V DC ⊗	

PLC: 01
RACK: 02
SLOT: 07

TERMINAL BLOCKS

24C

4–20mA	34000	
	34002	
	SHLD	
4–20mA	34004	
	34006	
	SHLD	
4–20mA	34008	
	34010	
	SHLD	
4–20mA	34012	
	34014	
	SHLD	
4–20mA	34016	
	34018	
	SHLD	
4–20mA	34020	
	34022	
	SHLD	
4–20mA	34024	
	34026	
	SHLD	
4–20mA	34028	
	34030	
	SHLD	

FIELD

PLC

mA CURRENT
ANALOG OUTPUT MODULE
CAT NO. 1769–OF8C
8 AO

24P

P–3252 SPEED SETPOINT	ANLG COM ⊗	
	I OUT 0+ ⊗	
SPARE	ANLG COM ⊗	
	I OUT 1+ ⊗	
P–3253 SPEED SETPOINT	ANLG COM ⊗	
	I OUT 2+ ⊗	
SPARE	ANLG COM ⊗	
	I OUT 3+ ⊗	
P–3254 SPEED SETPOINT	ANLG COM ⊗	
	I OUT 4+ ⊗	
SPARE	ANLG COM ⊗	
	I OUT 5+ ⊗	
SPARE	ANLG COM ⊗	
	I OUT 6+ ⊗	
SPARE	ANLG COM ⊗	
	I OUT 7+ ⊗	
	DC NEUT ⊗	
	+24V DC ⊗	

PLC: 01
RACK: 02
SLOT: 08

TERMINAL BLOCKS

24C

4–20mA	34032	
	34034	
	SHLD	
4–20mA	34036	
	34036	
	SHLD	
4–20mA	34040	
	34042	
	SHLD	
4–20mA	34044	
	34046	
	SHLD	
4–20mA	34048	
	34050	
	SHLD	
4–20mA	34052	
	34054	
	SHLD	
4–20mA	34056	
	34058	
	SHLD	
4–20mA	34060	
	34062	
	SHLD	

FIELD

NOTES:

1. CONTRACTOR TO ADD NEW 1769–OF8C.
2. NOT ALL EXISTING TERMINAL BLOCKS, PANEL DEVICES, OR FIELD CONNECTIONS ARE SHOWN ON THE DRAWING.
3. 4–20mA SHIELD SHALL BE GROUNDED IN ONLY ONE LOCATION, AT THE PLC CONTROL PANEL GROUND BUS BAR.
4. 4–20mA SHIELD SHALL BE CUT BACK AND HEAT SHRINK APPLIED.
5. EXISTING COMPONENT LABELING FROM TSI AS–BUILT DRAWINGS, CONTRACTOR IS RESPONSIBLE FOR FIELD VERIFYING THIS INFORMATION.

PROJECT WORK SHOWN ON THIS DRAWING IS ALL INCLUDED IN SCHEDULE A

LEGEND:

- WIRING INTERNAL TO PANEL
- FIELD WIRING
- ?? — DEVICE TERMINAL
- ??? — FEED–THROUGH TERMINAL IN PANEL
- SHLD — SHIELD TERMINAL IN PANEL
- ⏚ ??? — GROUND TERMINAL IN PANEL
- ?A ??? — FUSE TERMINAL IN PANEL
- ?A ↷ ??? — CIRCUIT BREAKER TERMINAL IN PANEL
- NC / CR??? C / NO — RELAY TERMINAL IN PANEL

	REVISIONS	DATE	BY

DESIGNED D. MILES
DRAWN D. MILES
CHECKED J. MURPHY
APPROVED B. BUNKER

ONE INCH AT FULL SCALE.
IF NOT, SCALE ACCORDINGLY

FILE NAME PS1598102–I311
JOB No. 216–1598–102
DATE FEBRUARY 2018

ARTHUR G. STOKES
STATE OF WASHINGTON
34738
REGISTERED
PROFESSIONAL ENGINEER

FEBRUARY 23, 2018

Parametrix
ENGINEERING . PLANNING . ENVIRONMENTAL SCIENCES
1019 39TH AVENUE SE, SUITE 100 | PUYALLUP, WA 98374
P 253.604.6600
WWW.PARAMETRIX.COM

PROJECT NAME
THE CONSOLIDATED BOROUGH OF
QUIL CEDA VILLAGE
MBR TREATMENT FACILITY UPGRADE
TULALIP, WASHINGTON

LCP-3600
PLC 1, RACK 2, SLOT 7 AND SLOT 8
ANALOG OUTPUTS

DRAWING NO.
157 OF 157

I311

PATH: U:\PSO\Projects\Clients\1598–TulalipTribes\216–1598–102 MBR Upgrade\99Svcs\CADD\DWG PLOTTED BY: vondejam DATE: Thursday, February 22, 2018 4:21:31 PM
LAYOUT: I311